38” Mulch Deck
1998 to 2002

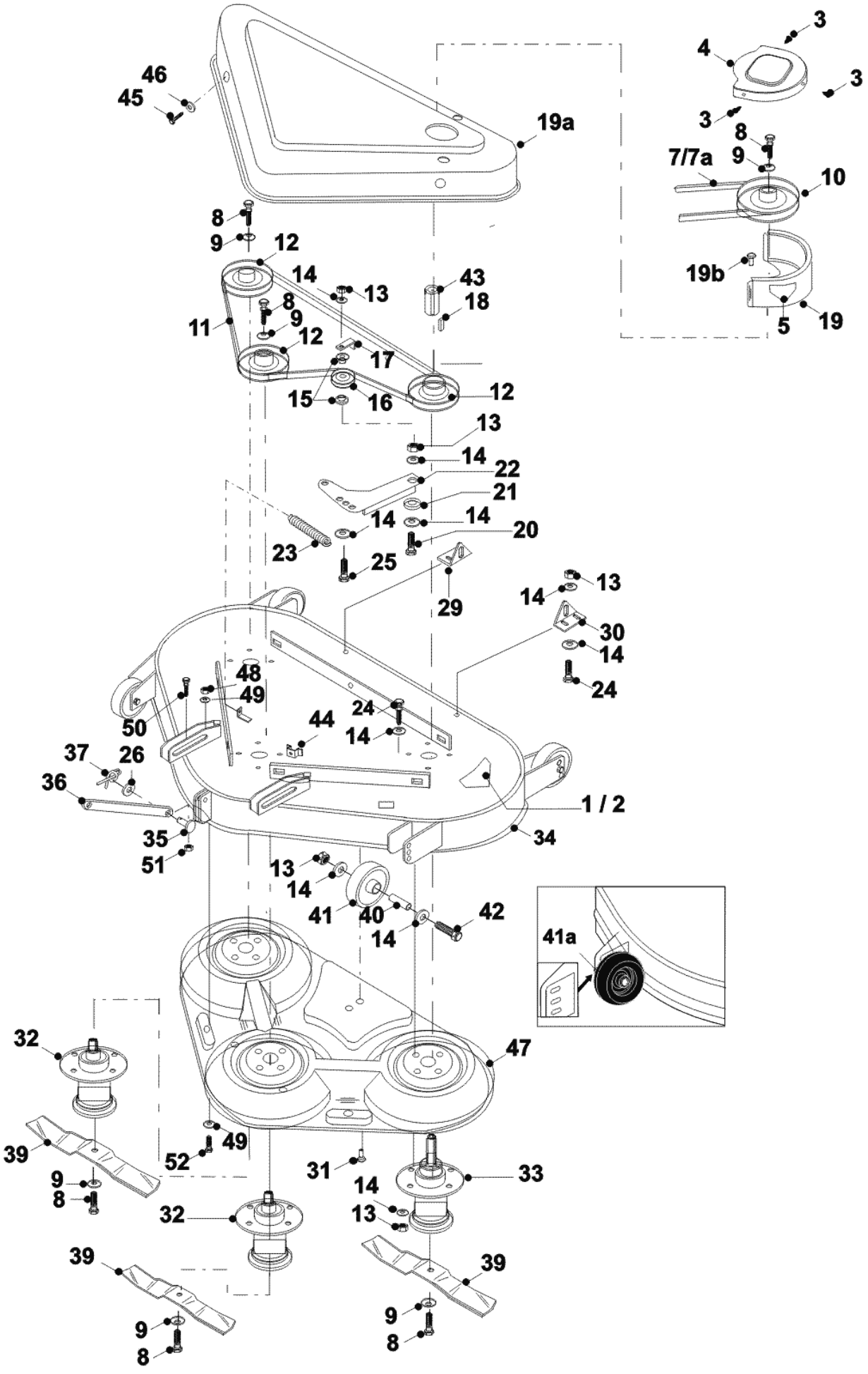

1 / 2	35945900	NEW PART NO: 35945901 MULCHER DECAL
1 / 2	35949000	MULCHER DECK HEIGHT DECAL
3	4958	FIRTREE FASTENER
4	149497400	UNIVERSAL DECK PULLEY COVER 2001
5	35803300	RIDER DECK DANGER DECAL
7/7A	22871200	BELT
7/7A	22940200	BELT DAYCO SUPER
8	02825300	BOLT 3/8 X 1 1/4" UNF
9	08819900	DOME WASHER 1.3/4OD X 3/8ID X 1/8 DOME
10	20870200	NEW PART NO: 20870202 7” DECK DRIVE PULLEY
11	228000500	BELT A72 SUPER 2 MULCHER APPLICATION
12	20869501	NEW PART NO: 20869502 5” INTERNAL PULLEY
13	04827500	NYLOC NUT 5/16 UNF
14	08819700	WASHER 5/16 T4 ZINC PLATED H/DUTY
15	18831600	SPACER JOCKEY WHEEL
16	20811500	PTO JOCKEY PULLEY (CAPITOL)
17	27105800	BELT RETAINING BRACKET
18	09830600	NEW PART NO: 09921900 KEY ROUNDED
19B	12949400	RIVET POP 4.8 X 6MM
19A	148002700	NEW PART NO: 148002701 38” MULCH DECK LID
19	327180000	36-44 MULCH DECK DRIVE PULLEY GUARD
20	01820700	BOLT 5/16UNF X 1.1/2 HT Z/P
21	31328900	NEW PART NO: 183853800 JOCKEY PIVOT SPACER
22	32734600	MULCH DECK BELT TENSION PLATE
23	25906200	42" DECK TENSION SPRING
24	02819600	SET SCREW 5/16UNF X 1 HT S/S ZINC PLATED
25	01820800	BOLT 5/16" UNF X 1 3/4"
26	08820100	WASHER 3/8 T3 Z/P
29	30121300	REAR DECK HANGING BRACKET R/H
30	30121400	REAR DECK HANGER BRACKET L/H
31	12868600	NEW PART NO: 128000100 RIVET
32	40503704	NEW PART NO: 40503607 BEARING HOUSING ASSY SHORT SHAFT
33	40503504	NEW PART NO: 40503507 BEARING HOUSING ASSY LONG SHAFT
34	327000101	2002 MULCH 38" DECK SHELL
35	31338200	DECK PUSH ROD PIN
36	29202200	NEW PART NO: 29202400 DECK TENSION ARM
36	29203700	MULCH DECK TENSION BAR 38"
37	11836700	RUE CLIP
39	16937900	15" L.H MUL BLADE

40	31337600	SCUFF WHEEL HUB/ BELT GUARD SPACER
41A	149495800	ANTISCALP WHEEL
41	19905500	ANTI SCALP WHEEL 1/2" BORE
42	01821200	BOLT 5/16UNF X 2.3/4 HT Z/P
43	31328301	DECK DRIVE PULLEY SPACER
44	04825800	NEW PART NO: 04852800 M8 CAPTIVE NUT
45	018001500	ROOFING BOLT M8 X 20MM
46	088000100	M8 SPRING WASHER
47	148002600	MULCHER DECK LINER INNER 38"
48	04823300	04850600 NEW PART NO: 04920100 M8 NYLOC NUT
49	088000100	M8 SPRING WASHER
50	01850900	S/SCREW 5/16 X 3/4IN
51	04827500	NYLOC NUT 5/16 UNF
52	01916900	NEW PART NO: 02826000 BOLT M8X25MM