FORM NO. 3317—835A

TORO®

MODEL NO. 74140—690001 & UP

PARTS CATALOG

Proline 724—Z

Zero—Radius Tractor

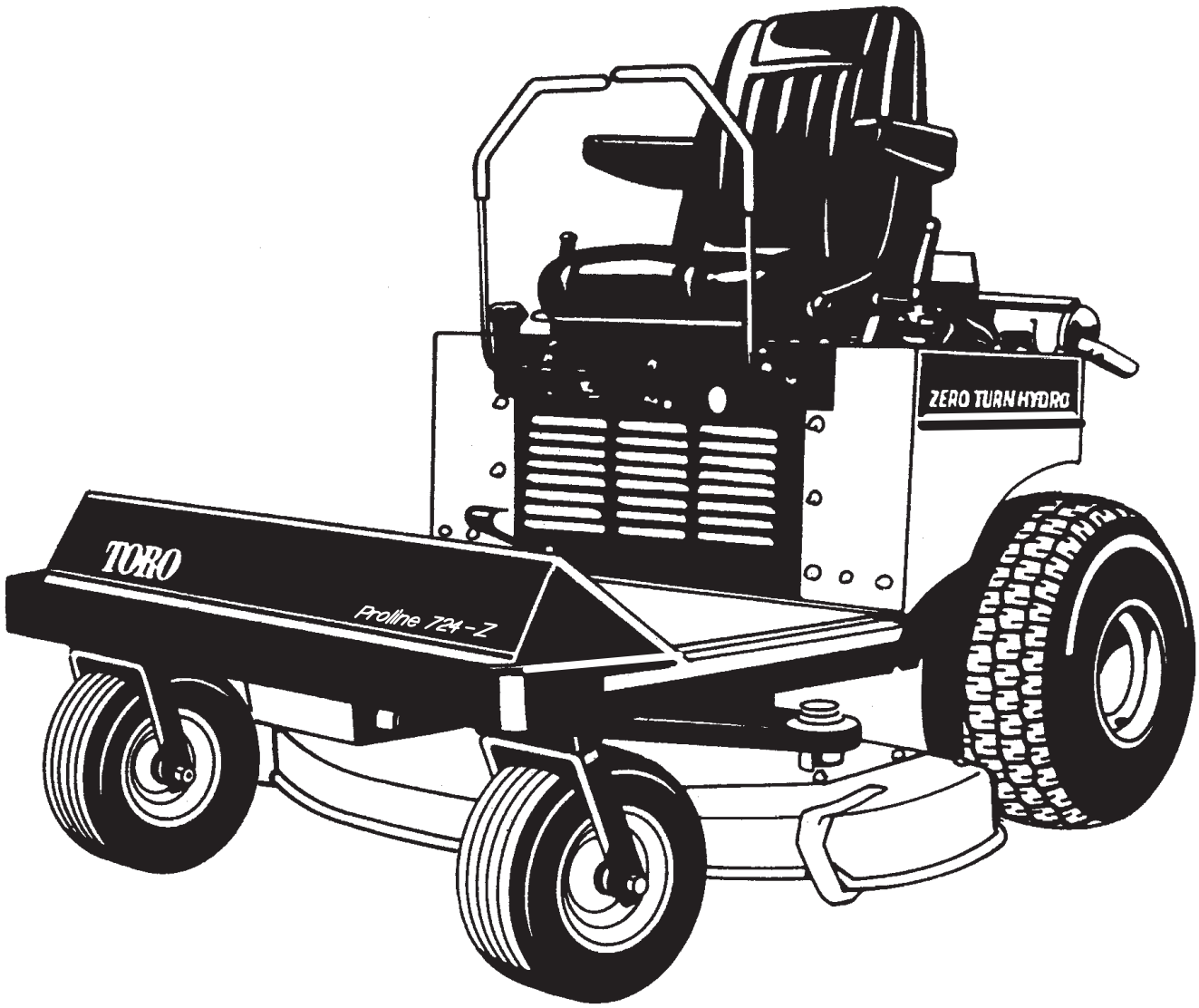

© The TORO Company —1995
All Rights Reserved

TPS

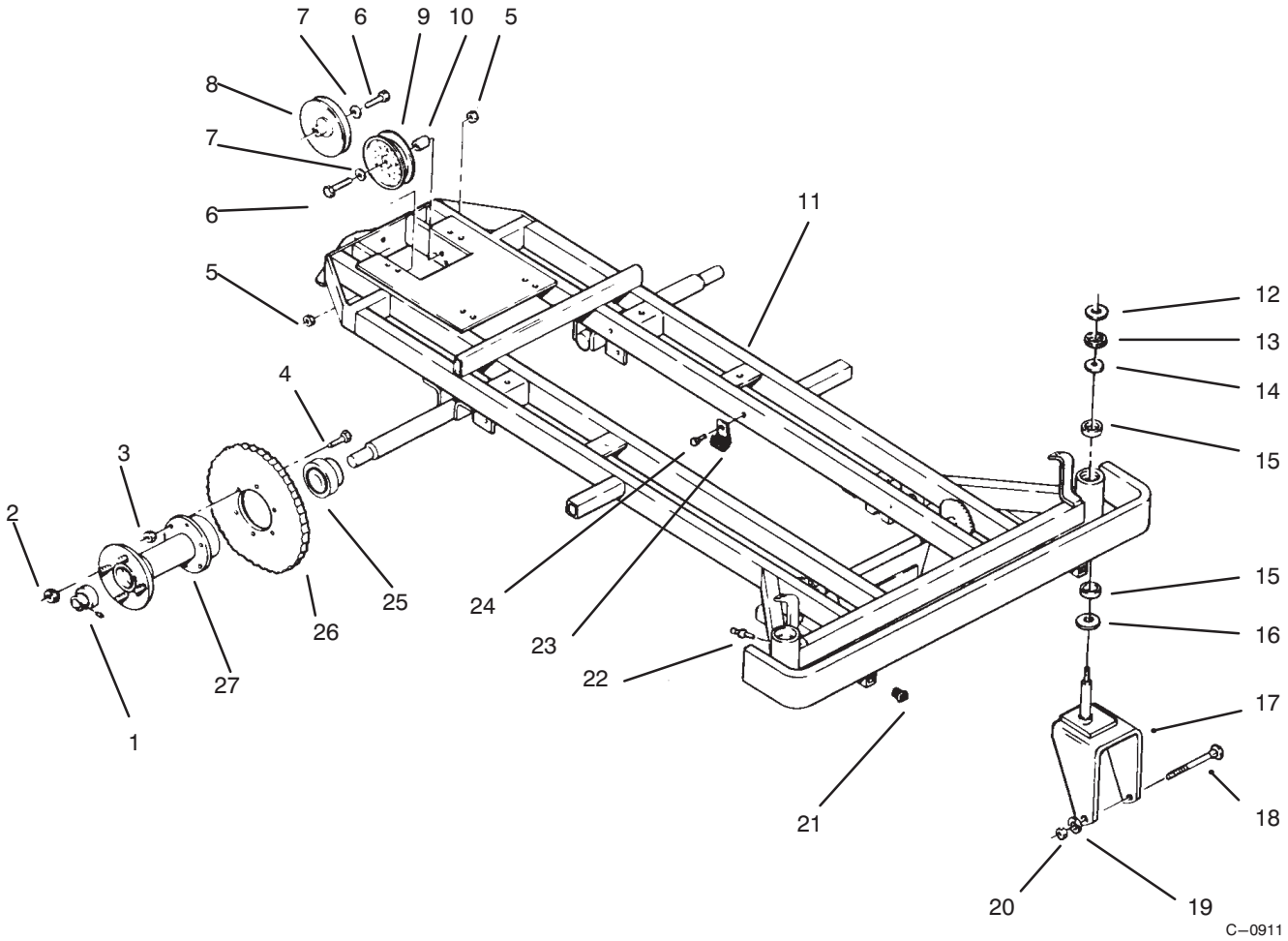

FRAME, REAR HUB AND FRONT WHEEL FORK

Ref. No.	Part No.	Description	No. Used
1	113530	Axle Hub Bearing – Outer	2
2	242–50	Nut – Lug	8
3	3296–39	Nut	12
4	323–7	Bolt	12
5	3296–39	Nut	2
6	323–10	Bolt	2
7	3256–4	Washer	2
8	115102	Pulley – V–Idler	1
9	113633	Pulley – Flat Idler	1
10	115101	Bushing	1
11	92–1759	Frame w/Bumper	1
12	32151–91	Ring – Retaining	2
13	9547	Washer – Thrust	2
14	920251	Washer	4
15	92–1714	Bushing – Front Bearing	4

Ref. No.	Part No.	Description	No. Used
16	9548	Washer – Thrust	2
17	79–4210	Fork – Front Wheel	2
18	327–15	Bolt	2
19	3253–8	Washer – Lock	2
20	3217–30	Nut	2
21	115226	Cap	2
22	302–5	Fitting – Grease	4
23	8830	Clip	3
24	32144–4	Bolt	3
25	113529	Axle Hub Bearing – Inner	2
26	114295	Sprocket	1
27	92–4845	Hub – Rear Wheel (Incl. Ref.# 22)	2
*	3290–378	Tie – Cable	1

*Not Illustrated

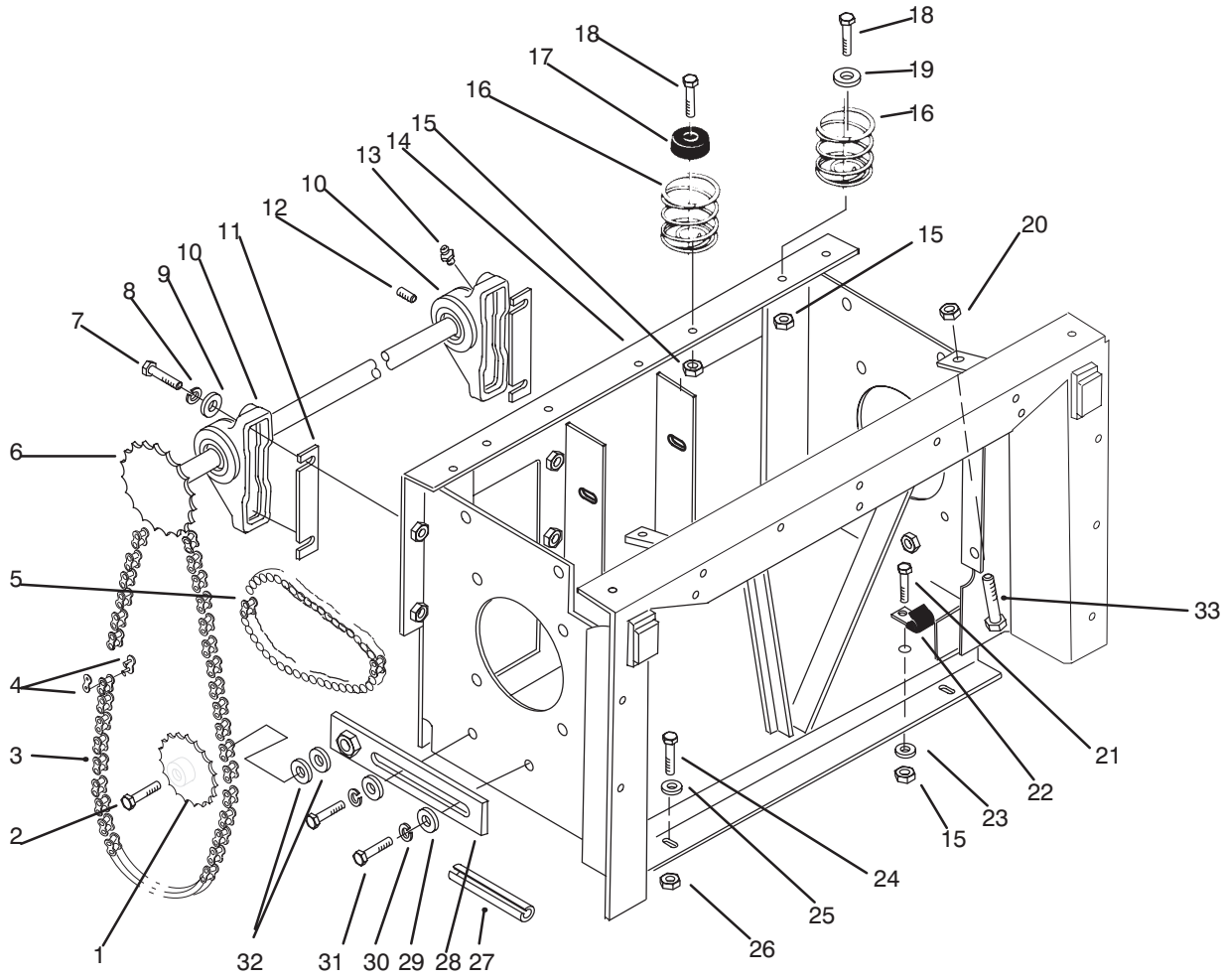

TRANSMISSION DRIVE FRAME

Ref. No.	Part No.	Description	No. Used
1	111887	Sprocket – Idler	2
2	327–4	Bolt – Idler Sprocket	2
3	116735	Chain – Secondary	2
4	109002	Link – Connecting	2
5	113691	Chain – Primary	2
6	113671	Jackshaft	2
7	323–8	Bolt	8
8	3253–21	Washer – Lock	4
9	3256–4	Washer – Flat	8
10	113531	Bearing – Pillow Block (Incl. Ref. #12 & 13)	4
11	113567	Shim – Bearing	A/R
12	3245–32	Screw – Set	4
13	302–2	Fitting – Grease	4
14	116888	Frame – Transaxle	1
15	3296–29	Nut	3
16	114497	Spring – Seat	4

Ref. No.	Part No.	Description	No. Used
17	116839	Bumper	2
18	322–5	Bolt	4
19	2844	Washer	2
20	3217–6	Nut	2
21	322–3	Bolt	2
22	8830	Clip	1
23	3256–23	Washer – Flat	1
24	323–6	Bolt	4
25	3256–24	Washer	2
26	3296–39	Nut	4
27	115200	Edge – Trim	1
28	112304	Bracket – Chain Tensioner	2
29	2844	Washer	4
30	3253–21	Washer – Lock	4
31	323–6	Bolt – Hex	5
32	3256–27	Washer	6
33	322–41	Screw – Machine, Hex. Hd.	2

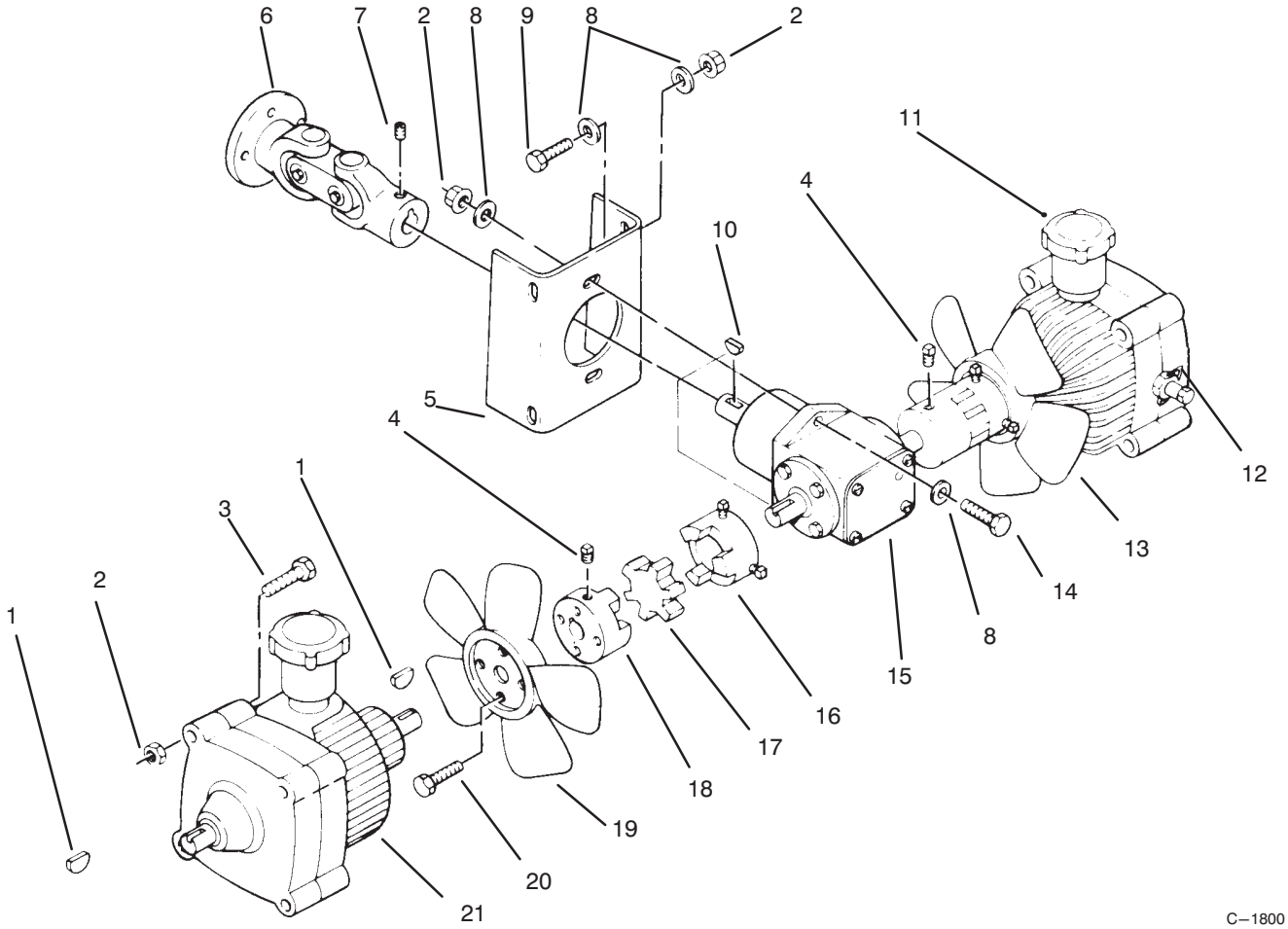

C–1800

TRANSMISSION DRIVE

Ref. No.	Part No.	Description	No. Used
1	937218	Key – Hi–Pro	4
2	3296–39	Nut	14
3	323–14	Bolt	8
4	3248–6	Screw – Set Sq	8
5	117295	Bracket – Gearbox	1
6	113578	U–Joint – Double	1
7	3247–3	Screw – Set	2
8	3256–4	Washer	18
9	323–6	Bolt	4
10	937225	Key – Hi–Pro	3
11	113569	Transmission – Hydrostatic, Clockwise Rotation Input Shaft	1
12	115960	Clip – Dump Valve	2

Ref. No.	Part No.	Description	No. Used
13	92–1799	Fan – LH, Clockwise	1
14	323–7	Bolt	2
15	113640	Gear Box – Peerless 794381 (Model 1000–010)	1
16	115857	Coupler – LJ, .670 x .125 Keyway	2
17	113663	Spider – Coupling	2
18	115856	Coupler – LJ, .875 x .1875 Keyway	2
19	113650	Fan– RH Counterclockwise	1
20	32144–1	Screw	8
21	113568	Transmission – Hydrostatic, Counterclockwise Rotation Input Shaft	1

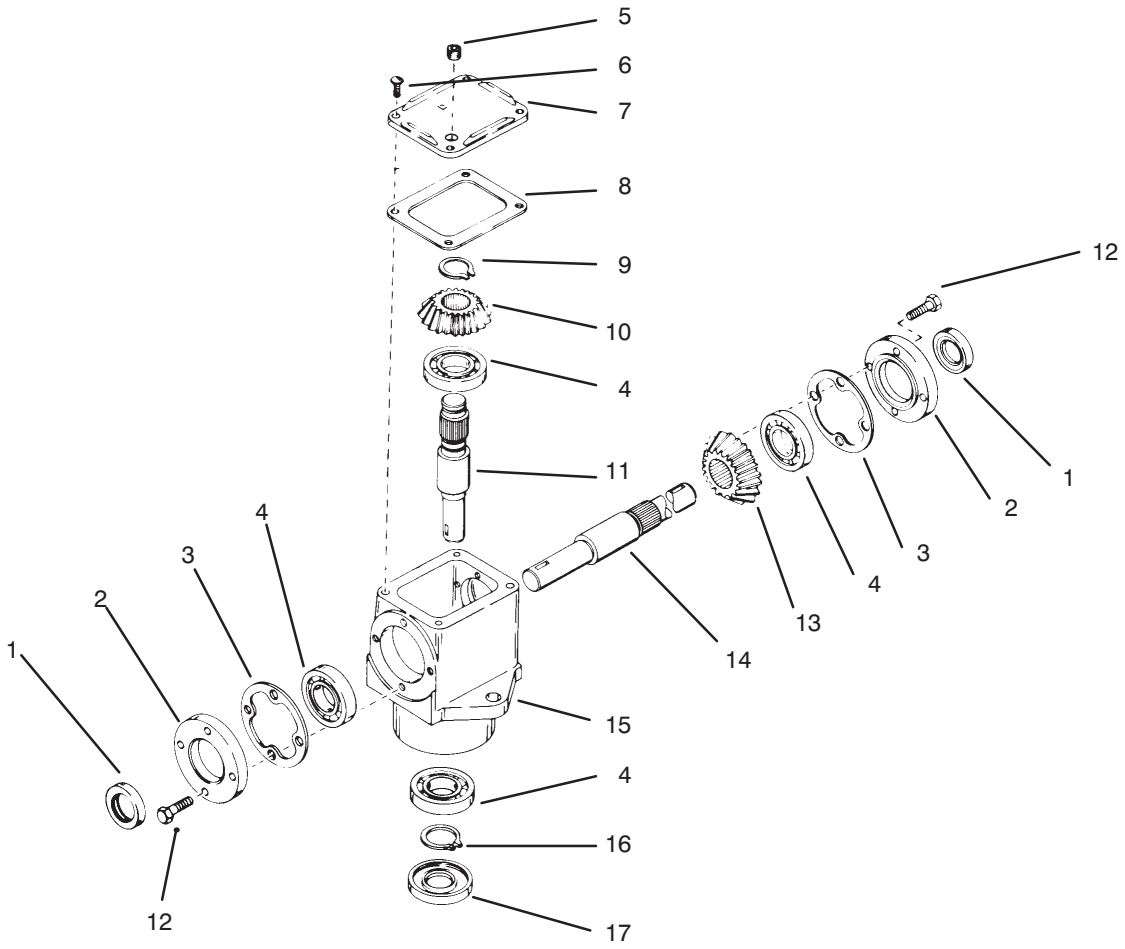

C—1801

PEERLESS GEARBOX ASSEMBLY

Ref. No.	Part No.	Description	No. Used
1	788031	Seal — Oil	2
2		Cap — End	2
3	788030	Gasket — Cap	2
4	780034	Bearing — Ball	4
5	28534	Plug — Pipe	1
6	792025	Screw — Pan Hd.	4
7	772067	Cover	1
8	788028	Cover — Gasket	1
9	788018	Ring — Snap	1
10	778101	Gear — Miter	1
11	776060A	Shaft — Output	1
12	792026	Screw— Hex. Hd.	8

Ref. No.	Part No.	Description	No. Used
13	778210	Gear — Miter	1
14	776127	Shaft — Input	
15	770047A	Housing — T—Drive	1
16	788019	Ring — Snap	1
17	788029	Seal — Oil	1
*	794381	Head Assy — T—Drive (Incl. Cap & Seal Assembly & Ref.# 1 & 2)	1
*	786029	Cap & Seal Assy — Retainer (Incl. Ref. #1 & 2)	2
+		Gear Box — Peerless 794381 (Model 1000—010)	1

*Not Illustrated

+ Obtain Parts From Peerless

HYDROSTATIC TRANSMISSION

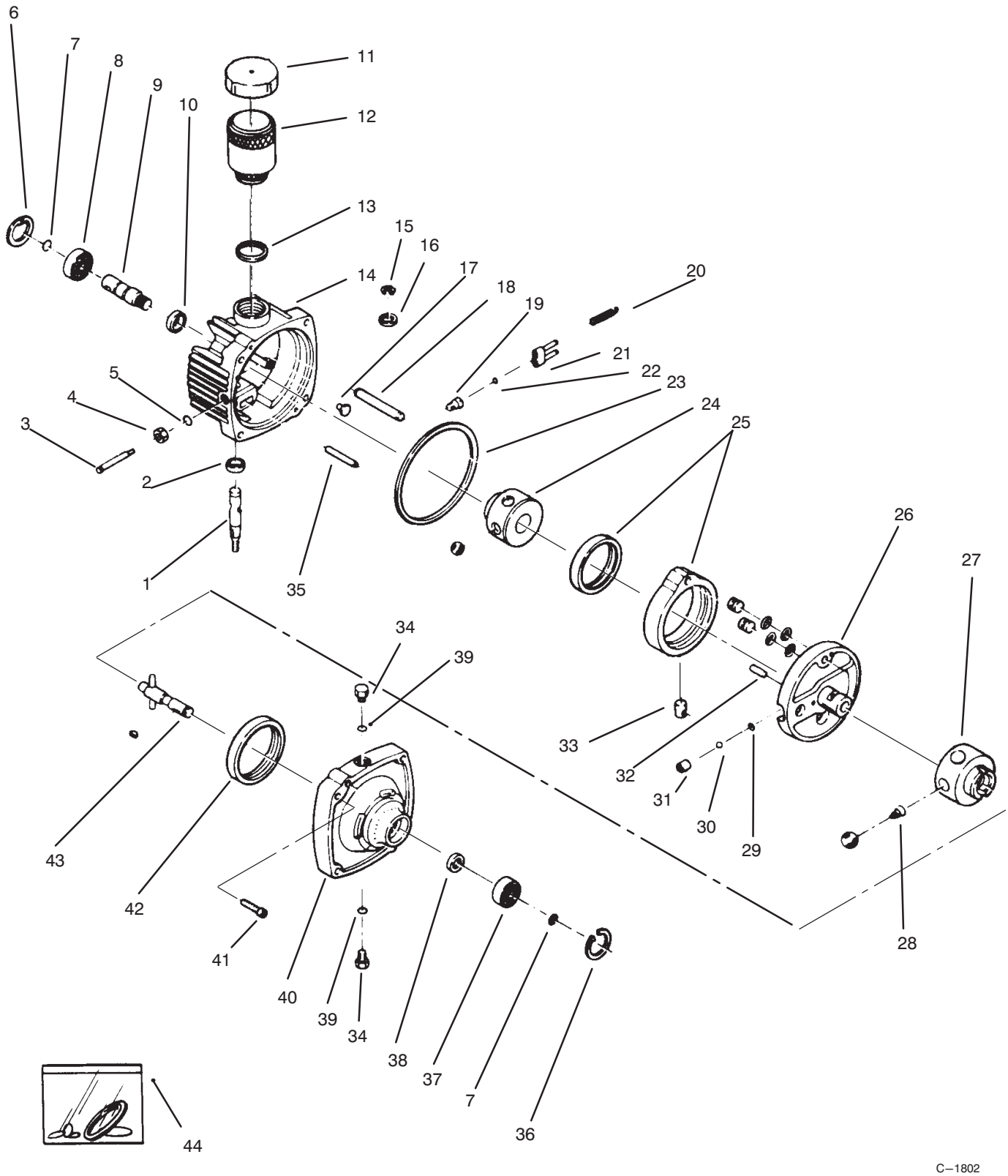

HYDROSTATIC TRANSMISSION

Ref. No.	Part No.	Description	No. Used
1	112606	Kit – Control Shaft	2
2	112605	Seal – Oil	2
3	112633	Valve – Dump	2
4		Nut	2
5	112631	O–Ring	2
6	56–3290	Ring – Retaining	2
7	112601	Ring – Retaining	2
8	112602	Bearing – Ball, Input	2
9	112603	Shaft – Input	2
10	56–2820	Seal – Oil	2
11	112589	Cover – Reservoir	2
12	112590	Body – Reservoir	2
13	112591	Seal – Ring, Sq	2
14	112625	Kit – Cover (Incl. Ref. # 1, 2, 10, 15. 16, 18 & 35)	1
15	112593	Ring – External Retaining	2
16	112594	Washer – Control Shaft	2
17	56–2880	Button	2
18		Dowel (Ref.)	1
19	112626	Fitting – Guide Assembly	2
20	112629	Spring – Dump Valve	4
21	112628	Bracket & Pins Assembly	2
22	112627	O–Ring	2
23	112596	Seal – Ring, Sq	2
24	112597	Rotor & Balls Assembly	2
25	112619	Ring Sub–Assembly – Cam (Incl. Pump Race & Cam Ring)	2
26	112630	Pintle Assembly – Used in CCW rotation trans. Model #00700–023 (Incl. Ref.#29–32)	1
27	112599	Rotor & Balls Assembly – Motor Incl. Ref. #28)	2
28	112612	Spring – Piston	10
29	56–3000	Ring – Retaining	4
30	56–3010	Ball	4
31	112609	Body – Check Valve	4
32	56–2980	Pin – Coil	4
33	112607	Insert – Cam Ring	2
34	56–3250	Plug Assembly – O–Ring (Incl. Ref. #39)	2
35		Dowel (Ref.)	1
36		Ring – Retaining	1
37		Bearing – Ball	1
38		Ring – Retaining	1
39	56–3260	O–Ring	2
40	112620	Body Assembly (Incl. Ref.# 7, 34, 36–39, 41 & 43)	2
41	56–3100	Screw – Socket Hd.	4
42		Seal – Oil	1
43	112615	Shaft Assembly – Output	2
44	112618	Kit – Overhaul Sealing (Incl.	
	112632	Kit – Gasket Asm.	1
*	740315	Manual – Hydrostatic Transmission Repair	1

TRANSMISSION DRIVE LINKAGE

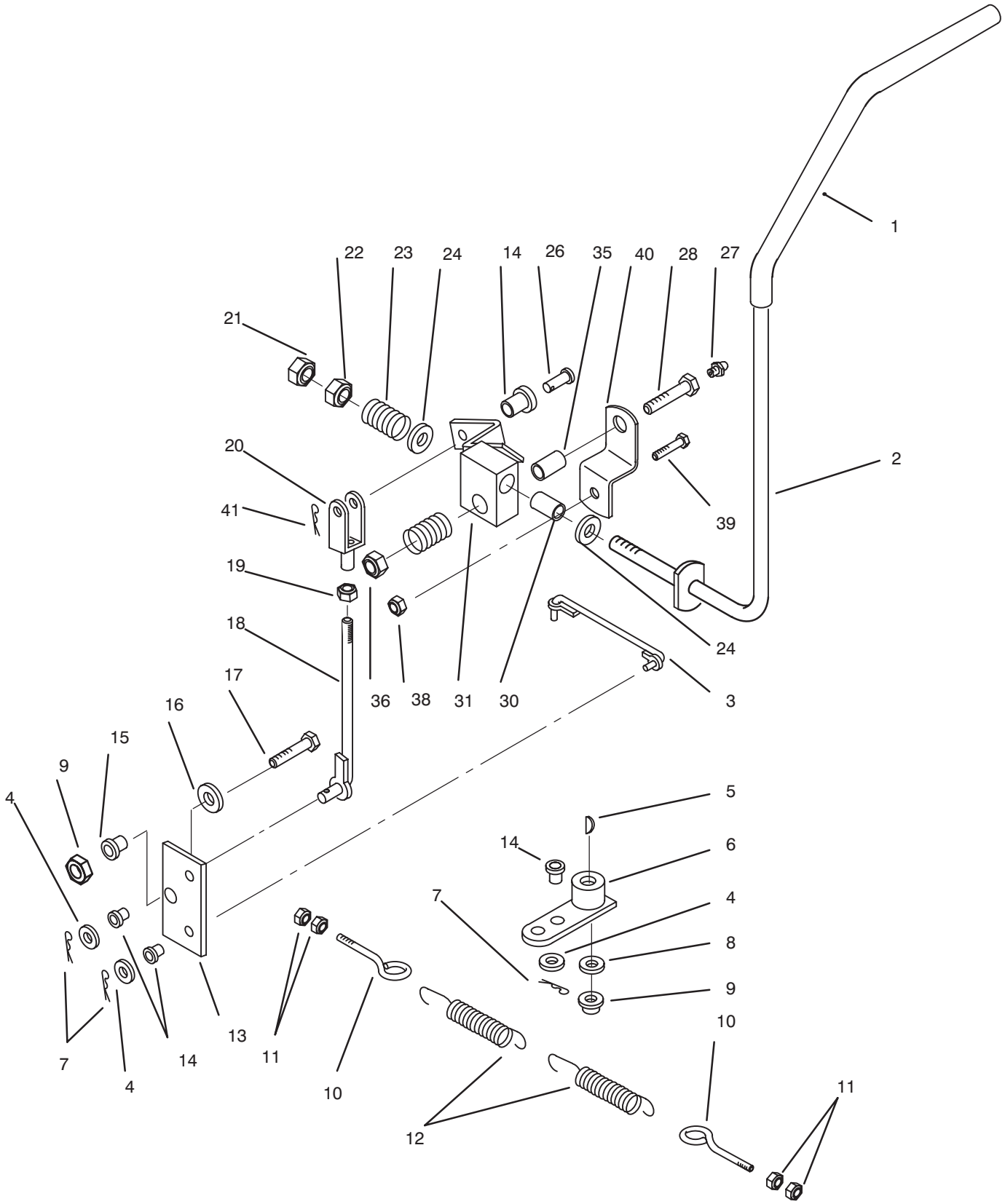

TRANSMISSION DRIVE LINKAGE

Ref. No.	Part No.	Description	No. Used
1	92–6519	Grip Handle – Control	2
2	117561	Lever – Steering LH	1
*	117560	Lever – Steering RH	1
3	78–7560	Linkage Drive, Lower RH	1
*	78–7570	Linkage Drive, Lower LH	1
4	3256–23	Washer	6
5	937082	Key – Woodruff	2
6	113680	Arm – Hydro Control	2
7	3272–7	Pin – Cotter	6
8	3256–24	Washer – Flat	2
9	3296–39	Nut	4
10	113688	Bolt – Eye	4
11	3217–5	Nut	8
12	113081	Spring – Neutral	4
13	79–1260	Block – Pivot	2
14	113509	Bushing – Nylon	8
15	104859	Spacer	2
16	2844	Washer – Special	2
17	323–7	Bolt	2
18	113570	Linkage – Drive, Upper	2

Ref. No.	Part No.	Description	No. Used
19	3219–2	Nut – Hex	2
20	282–2	Yoke – Threaded	2
21	3218–5	Nut – Jam	4
22	3296–23	Nut	2
23	113632	Spring	4
24	3256–26	Washer – Special	4
26	283–61	Pin – Clevis	2
27	302–5	Fitting – Grease	2
28	116460	Bolt – Shoulder (Incl. Ref. #27)	2
30	113675	Bushing – Bronze	2
31	114661	Pivot – Steering Lever LH	1
*	114662	Pivot – Steering Lever RH	1
35	115295	Bushing	1
36	3296–23	Nut	1
38	3296–29	Nut	1
39	322–3	Bolt	1
40	79–0560	Strap	2
41	9335044	Pin – Cotter	2
*	3290–378	Tie –Cable	4

*Not Illustrated

FENDERS AND COVERS

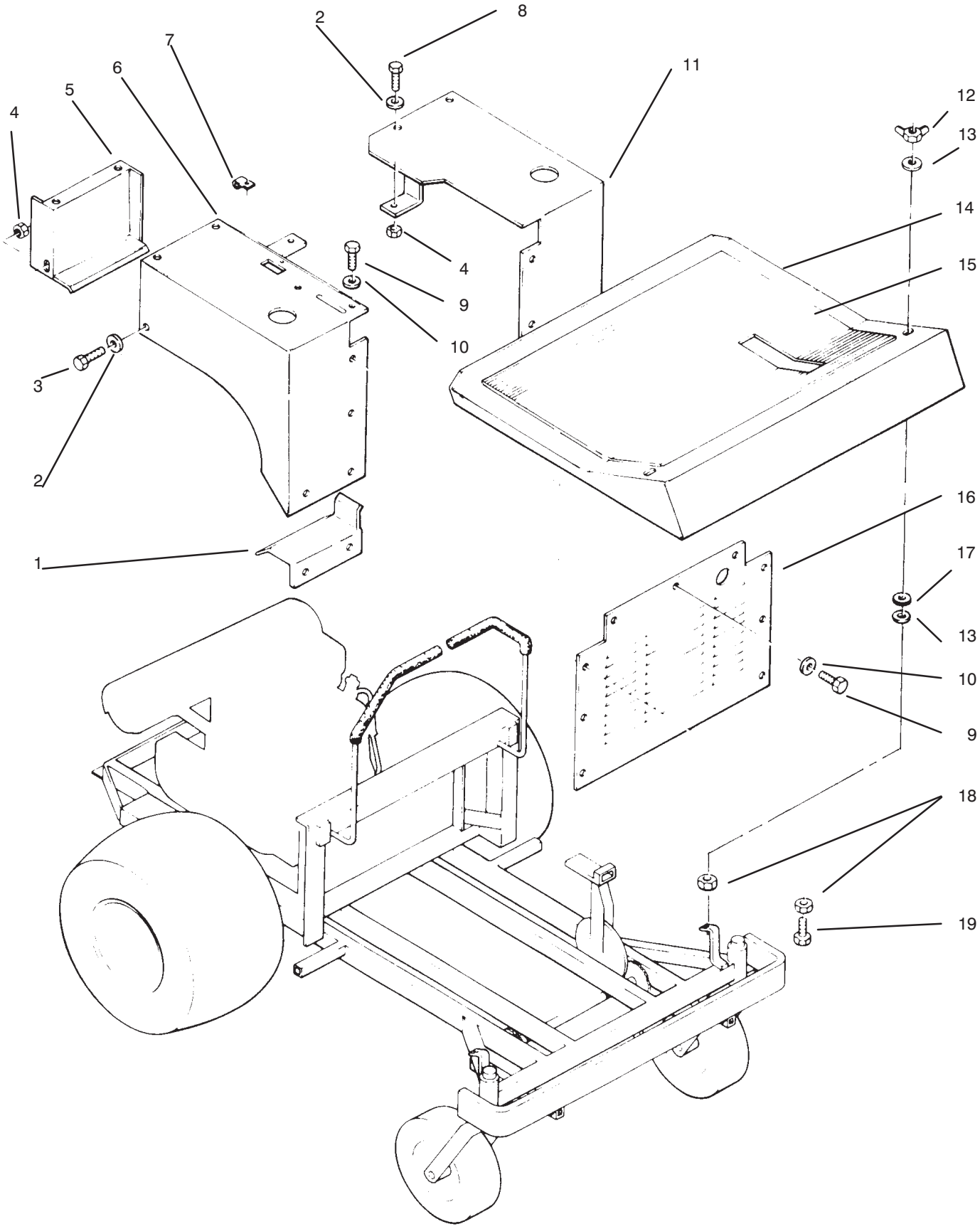

FENDERS AND COVERS

Ref. No.	Part No.	Description	No. Used
1	111911	Bracket — Fender, RH Front	1
*	111912	Bracket — Fender, LH Front	1
2	3256—22	Washer — Flat	10
3	321—3	Bolt	10
4	3296—42	Nut	10
5	111909	Bracket — Fender, RH Rear	1
*	111910	Bracket — Fender, LH Rear	1
6	79—5630	Fender — RH	1
7	111357	Clip	1
8	321—4	Bolt	2
9	32144—4	Bolt	11
10	3256—2	Washer	11
11	113659	Fender — LH	1
12	915585	Nut — Wing	2
13	3256—68	Washer — Fender	4
14	111891	Pan — Floor	1
15	93—3226	Mat — Footrest	1
16	79—2710	Panel — Front	2
17	107675	Washer — Rubber	2
18	3217—6	Nut	4
19	322—41	Bolt	2

*Not Illustrated

PARKING BRAKE

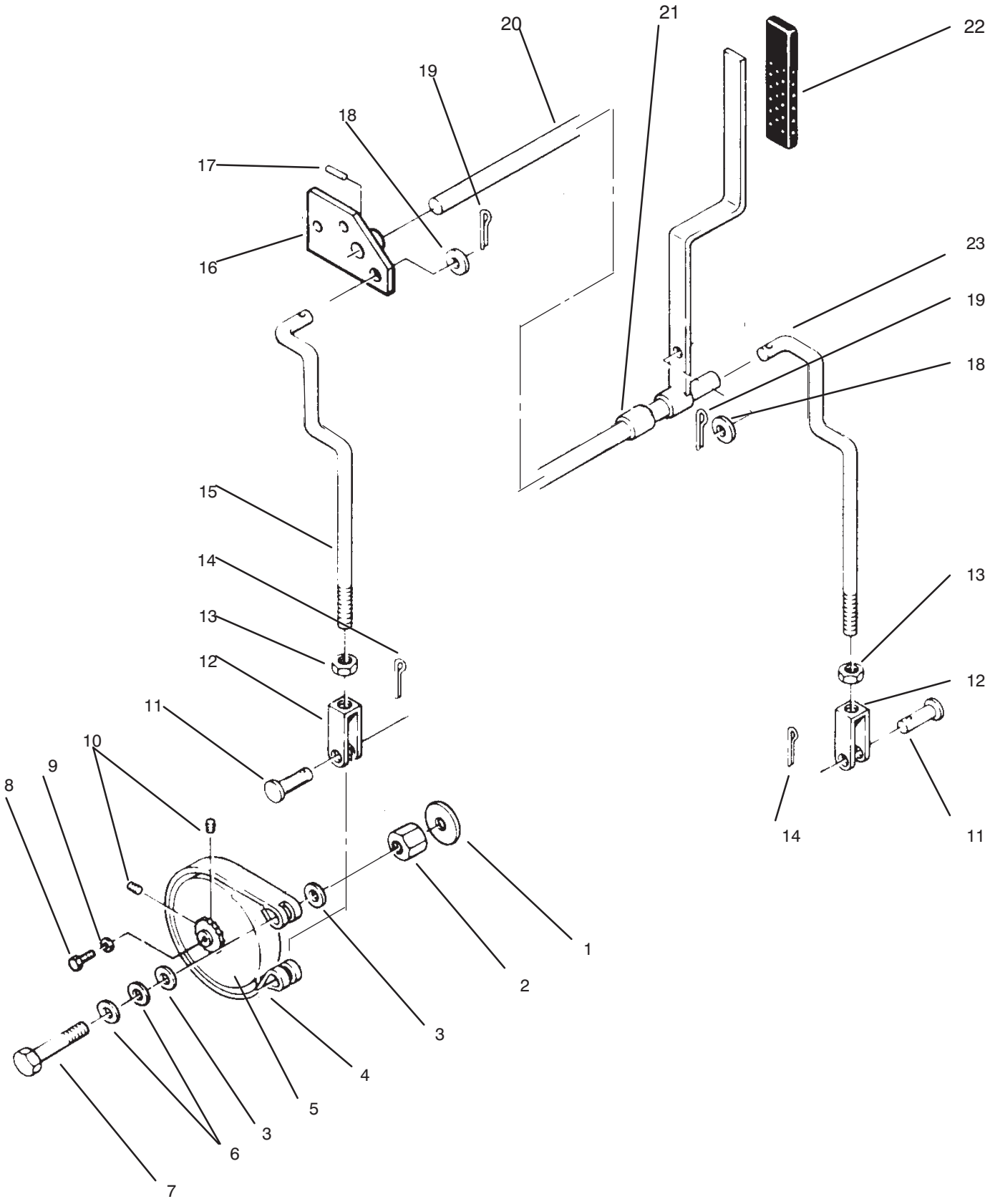

C–1782

PARKING BRAKE

Ref. No.	Part No.	Description	No. Used
1	2844	Washer	2
2	113690	Nut – Coupling Rod	1
3	3256–24	Washer	1
4	113624	Bands – Brake	2
5	113518	Sprocket & Drum #50	2
6	108571	Washer – Spring	4
7	323–7	Bolt	2
8	321–3	Bolt	1
9	103995	Washer	1
10	3245–32	Setscrew	2
11	283–6	Pin – Clevis	2
12	113623	Yoke – Threaded	2
13	3219–2	Nut	2
14	3272–6	Pin – Cotter	2
15	115794	Rod – Brake RH	1
16	116478	Lever – Parking Brake	1
17	32121–114	Pin – Spirol	1
18	3256–23	Washer – Flat	2
19	3272–6	Pin – Cotter	2
20	113668	Rod Assembly – Brake	1
21	113665	Spacer	1
22	62–9130	Grip PTO & Brake Handle	2
23	115793	Rod – Brake LH	1

*Not Illustrated

ATTACHMENT HEIGHT CONTROL

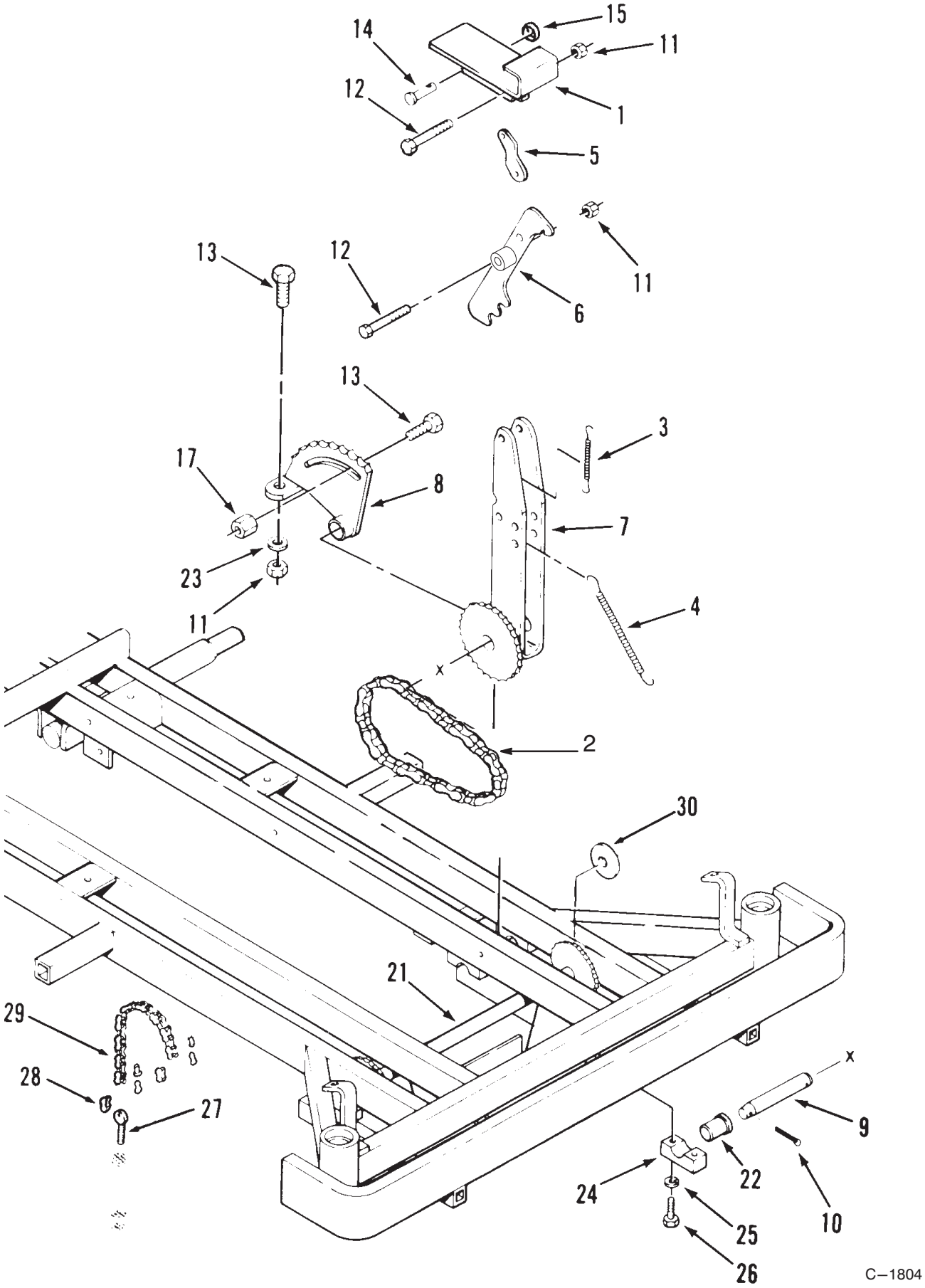

ATTACHMENT HEIGHT CONTROL

Ref. No.	Part No.	Description	No. Used
1	112954	Pedal – Foot	1
2	115855	Chain – Foot Pedal	1
3	113081	Spring – Foot, Short	1
4	114183	Spring – Foot, Long	1
5	112955	Link – Pivot	1
6	112956	Arm – Lift Pawl	1
7	112957	Lever Arm & Sprocket Assy	1
8	112958	Sprocket – Height Control	1
9	113149	Pin	1
10	3272–19	Pin – Cotter	2
11	3296–29	Nut	2
12	322–9	Bolt	2
13	322–5	Bolt – Hex	2
14	114613	Pin – Clevis	1
15	100307	Ring – Retaining	1
17	112941	Nut – Hex, Special	1
21	113684	Sprocket Assembly	1
22	113687	Bearing – Flanged	4
23	3253–23	Washer – Flat	8
24	114294	Clamp – Cross Shaft	1
25	3256–21	Washer – Lock	8
26	323–7	Bolt	8
27	113697	Bolt – Eye	2
28	6392	Link – Master	2
29	113699	Chain – Link, Mower Deck	2
30	9202254	Washer	2

*Not Illustrated

ENGINE AND FUEL SYSTEMS

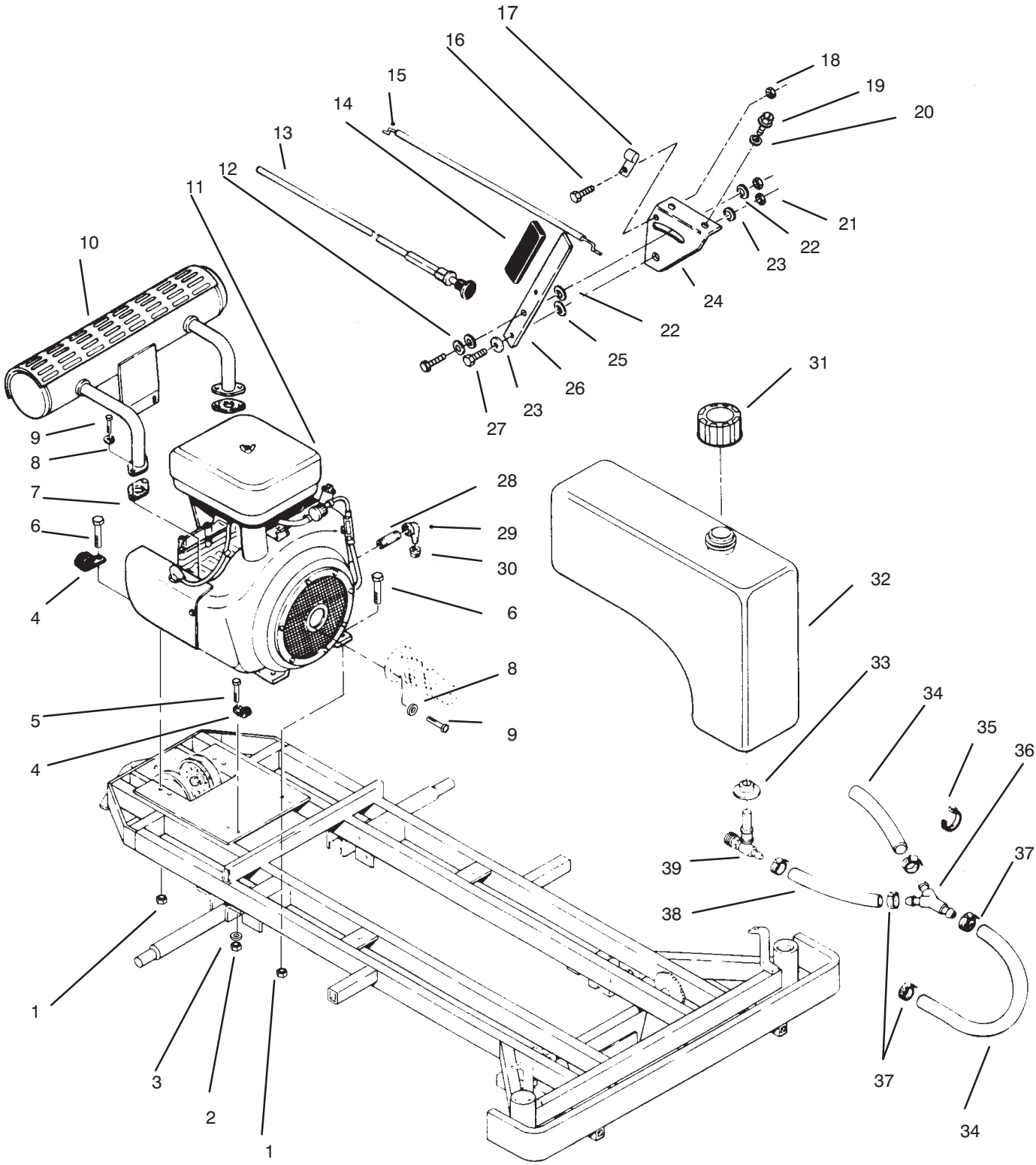

C—1781

ENGINE AND FUEL SYSTEMS

Ref. No.	Part No.	Description	No. Used
1	3296–39	Nut	4
2	3296–29	Nut	1
3	3256–23	Washer – Flat	1
4	8830	Clip	2
5	322–3	Bolt	1
6	3234–18	Bolt	4
7	82–1520	Gasket – Exhaust	2
8	3253–4	Washer – Lock	8
9	3274–22	Bolt	8
10	117580	Muffler	1
11	94–1814	Engine – 24 HP Toro Power Plus P224 G I/10966G	1
12	100365	Washer – Lock	2
13	113693	Control – Choke	1
14	111922	Grip – Handle	1
15	105014	Cable – Throttle	1
16	3290–134	Screw	1
17	7059	Clip	1
18	3296–2	Nut	1
19	321–2	Screw	2
20	3253–3	Washer – Lock	2

Ref. No.	Part No.	Description	No. Used
21	108881	Nut	2
22	100305	Washer – Friction	2
23	3256–24	Washer	1
24	14–9079	Bracket & Cable – Throttle	1
25	6331	Spacer	2
26	79–4800	Handle	1
27	323–6	Bolt	2
28	289–45	Nipple	1
29	2811–10	Elbow	1
30	288–4	Cap	1
31	55–3570	Cap – Fuel	1
32	78–3270	Tank – Fuel (Incl. Items #33 & 39)	2
33	104047	Bushing	2
34	47–2967	Line – Fuel (29.5”)	2
35	3290–378	Straps – Tie	4
36	111879	Fitting – Fuel Line	2
37	2412–98	Clamp – Hose	5
38	47–2966	Line – Fuel (5”)	1
39	104048	Valve Assembly – Fuel	2

*Not Illustrated

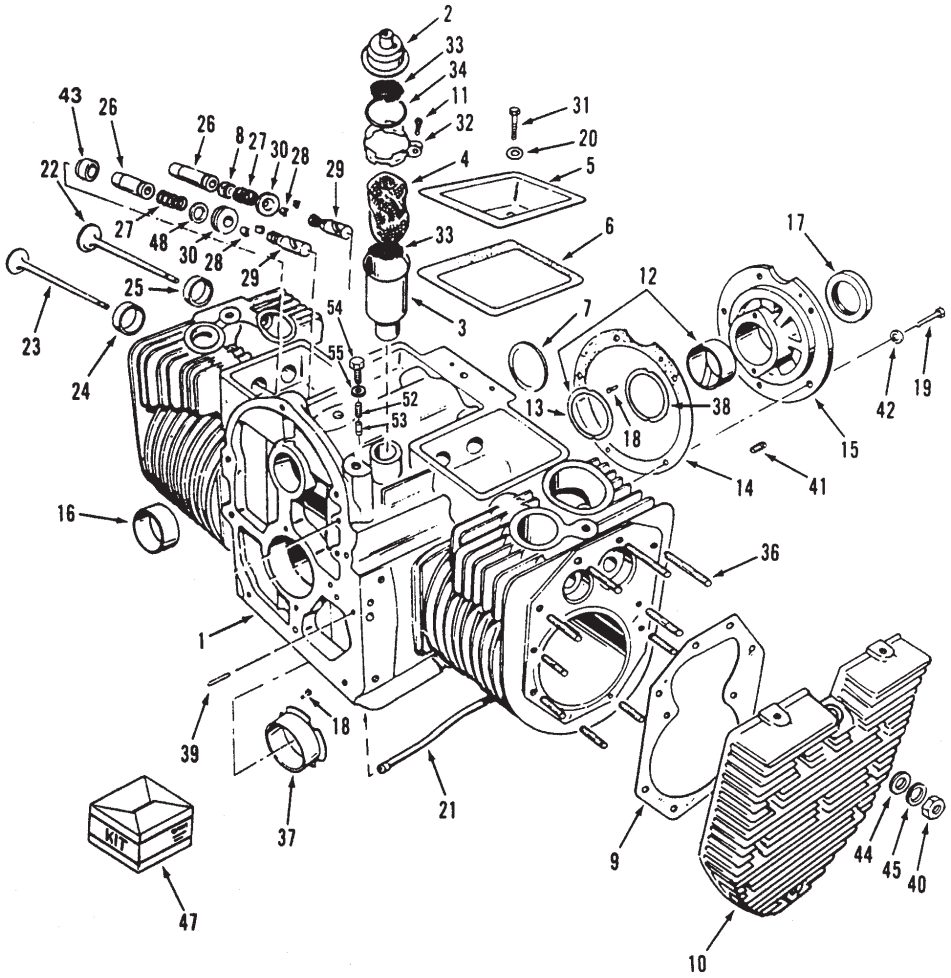

C—1805

CYLINDER BLOCK

Ref. No.	Part No.	Description	No. Used
1	92—0924	Block — Short 24 HP. Spec G (Incl. Ref.# 3, 7, 13—16,18, 21, 24—26, 30, 36, 38, & 39)	1
2	82—0550	Cap & Valve — Breather	1
3	82—0540	Tube — Breather	1
4	57—8580	Baffle — Breather Tube	1
5	NN10045	Cover — Valve Compartment	2
6	82—0260	Gasket — Valve Cover	2
7	57—9690	Plug — Expansion	1
8	82—0270	Seal — Intake Valve	2
9	82—0130	Gasket — Cylinder Head	2
10	82—0210	Cylinder Head	2
11	82—1480	Screw — Round Hd.	1
12	57—8050	Bearing — Crankshaft , Rear STD	1
*	59—0020	Bearing — Crankshaft, Rear .002 Under	1
*	57—8060	Bearing — Crankshaft, Rear .010 Under	1
*	59—0030	Bearing — Crankshaft, Rear .020 Under	1
*	59—0040	Bearing — Crankshaft, Rear .030 Under	1
13	57—8160	Washer — Crankshaft Bearing, Thrust	2
14	57—8010	Gasket — Bearing Plate	1
15	82—0020	Plate — Bearing, STD. Rear	1
16	57—8000	Bearing — Camshaft	2
17	57—9590	Seal — Oil Crankshaft	1
18	59—0730	Pin — Bearing Stop	4
19	59—0880	Bolt	5
20	57—9740	Washer — Flat, Copper	2
21	82—0480	Tube — Oil Crankcase	1
22	82—0220	Valve — Intake	2
23	82—0230	Valve — Exhaust	2
24	82—0080	Insert — Exhaust Seat STD	2
*	82—0090	Insert — Exhaust Seat 002” Oversize	2
*	82—0100	Insert — Exhaust Seat .005” Oversize	2
*	82—0110	Insert — Exhaust Seat .010” Oversize	2
*	82—0120	Insert — Exhaust Seat .025” .025” Oversize	2

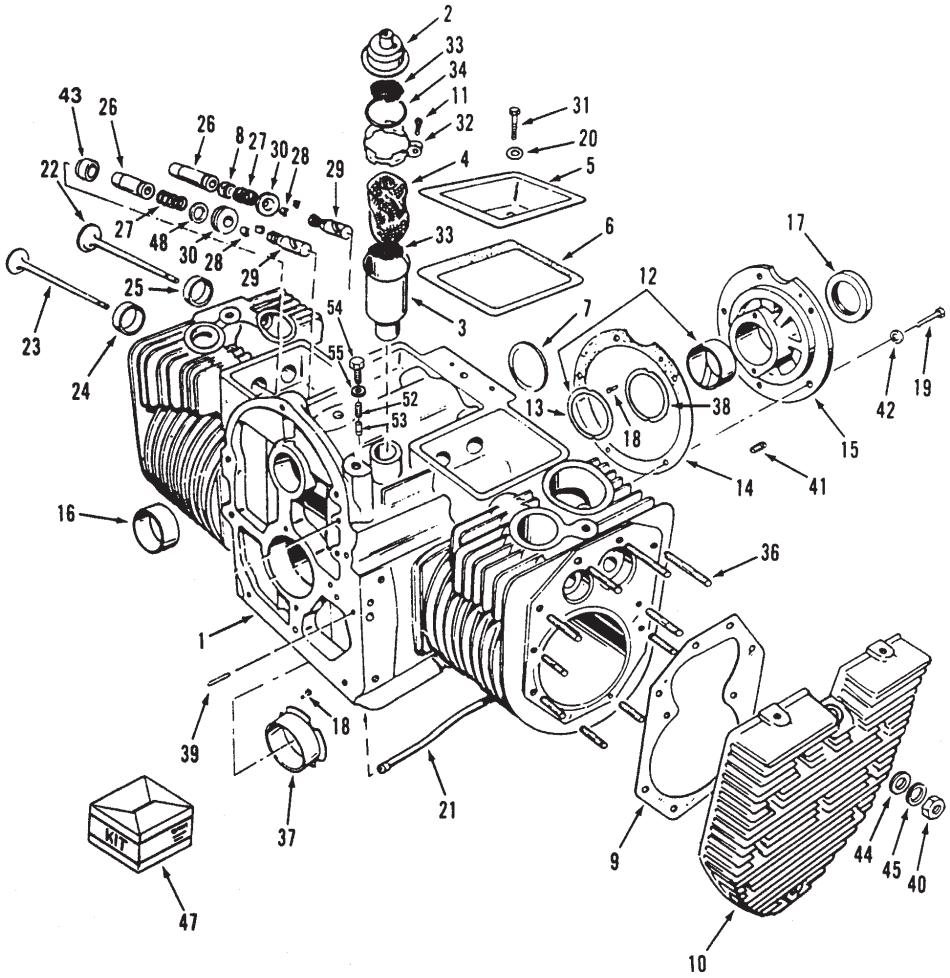

C—1805

CYLINDER BLOCK (Continued)

Ref. No.	Part No.	Description	No. Used
25	82—0160	Insert — Intake Seat STD	2
*	82—0180	Insert — Intake Seat .002" Oversize	2
*	92—0925	Insert — Intake Seat .005" Oversize	2
*	92—0926	Insert — Intake Seat .010" Oversize	2
*	92—0927	Insert — Intake Seat .025" Oversize	2
26	82—0140	Guide — Exhaust Valve	2
*	82—0150	Guide — Intake Valve	2
27	57—8250	Spring — Valve	4
28	82—0250	Lock — Valve Spring	8
29	57—8450	Tappet — Valve STD	4
*	59—0260	Tappet — Valve .005	4
30	57—8270	Rotator — Valve	2
31	82—1380	Bolt	2
32	82—0530	Clamp — Breather Tube	1
33	82—0560	Screen — Breather Tube	2
34	82—0570	Seal — Breather	1
36	92—0928	Stud — Cylinder Hd (Install 4 Bottom Holes LH, RH Hd)	8
*	92—0929	Stud — Cylinder Hd (2 Top Holes LH, RH Hd)	4

Ref. No.	Part No.	Description	No. Used
*	92—0932	Stud — Cylinder Hd (4 Middle Holes LH, RH Hd)	8
37	57—8020	Bearing — Flanged Sleeve STD	1
*	57—9360	Bearing — Flanged Sleeve .002 Under	1
*	57—8030	Bearing — Flanged Sleeve .010 Under	1
*	57—9800	Bearing — Flanged Sleeve .020 Under	1
*	59—0010	Bearing — Flanged Sleeve .030 Under	1
38	57—8170	Shim — Crankshaft Thrust .005	A/R
39	59—0750	Pin — Gearcase Alignment	2
40	82—0040	Nut	20
41	3247—4	Screw	2
42	82—1310	Washer — Lock	5
43	82—0240	Cap — Exhaust Valve	2
44	82—1300	Washer — Flat	20
45	82—1650	Washer — Lock	24
47	NN10923	Kit — Gasket, Carbon Removal	1
48	82—0070	Washer	2

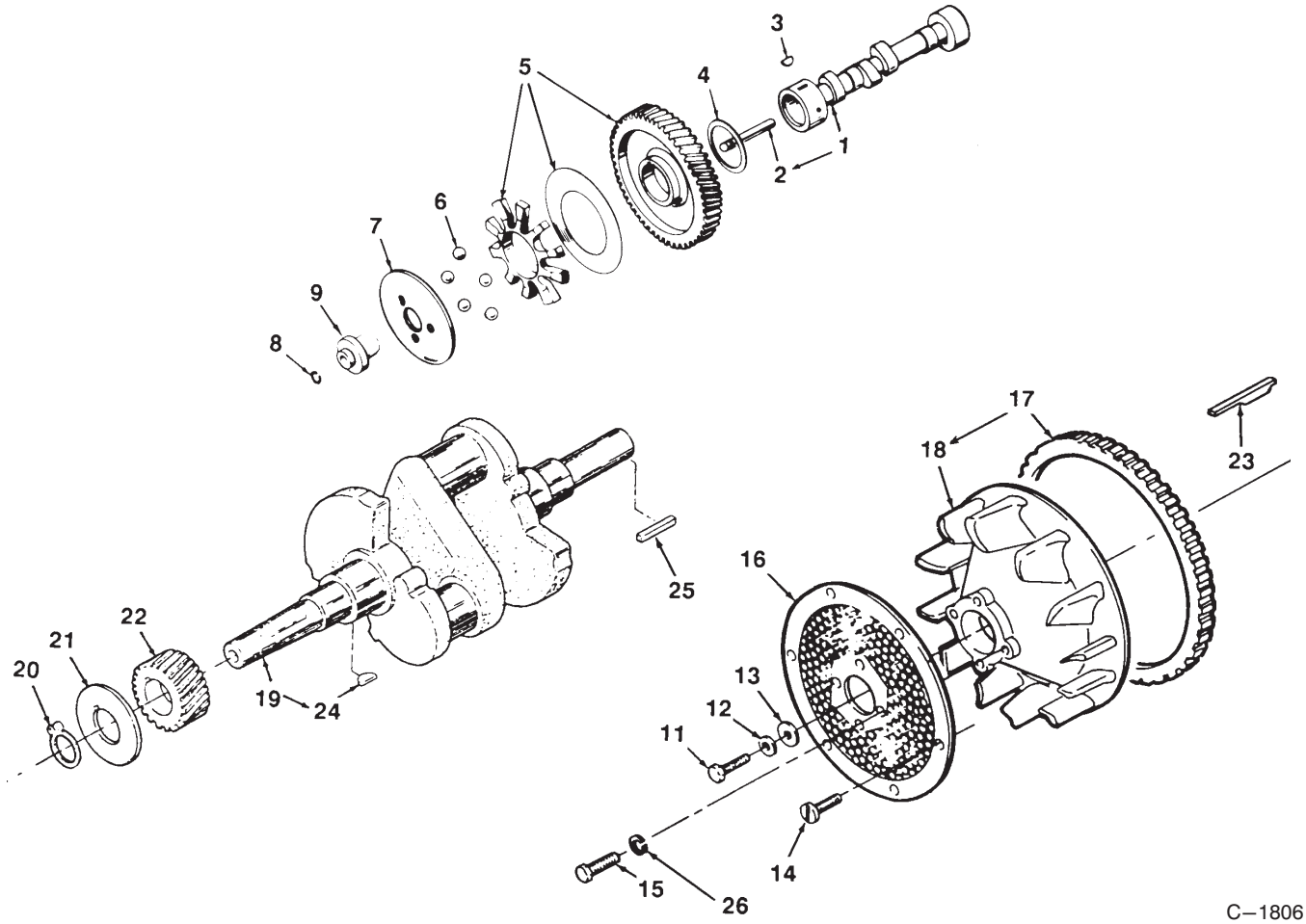

C—1806

CRANKSHAFT, CAMSHAFT AND FLYWHEEL

Ref. No.	Part No.	Description	No. Used
1	82—0880	Camshaft (Incl. Center Pin)	1
2	59—0400	Pin — Camshaft	1
3	57—9660	Key — Camshaft Gear	1
4	57—8230	Washer — Thrust	1
5	57—8210	Gear — Camshaft (Incl. Plate & Spacer)	1
6	57—9640	Ball — Governor Fly	5
7	59—0450	Cup — Governor	1
8	57—9090	Ring — Retaining	9
9	57—9130	Hub — Governor Cup	1
11	57—8150	Bolt — Special	1
12	82—1320	Washer — Flat	1
13	59—0810	Washer — Flat	1

Ref. No.	Part No.	Description	No. Used
14	71—6340	Screw	6
15	59—1120	Bolt	4
16	79—6440	Guard — Flywheel	1
17	57—8180	Ring — Gear	1
18	82—0610	Flywheel (Incl. Ring — Gear)	1
19	NN10026	Crankshaft (Incl. Keys)	1
20	57—9710	Ring — Retaining	1
21	57—8140	Washer — Gear Retaining	1
22	92—0941	Gear — Crankshaft	1
23	71—6190	Key — Flywheel	1
24	57—9660	Key — Crankshaft Gear	1
25	82—1160	Key — Crankshaft Stub	1
26	82—1630	Washer — Lock	4

*Not Illustrated

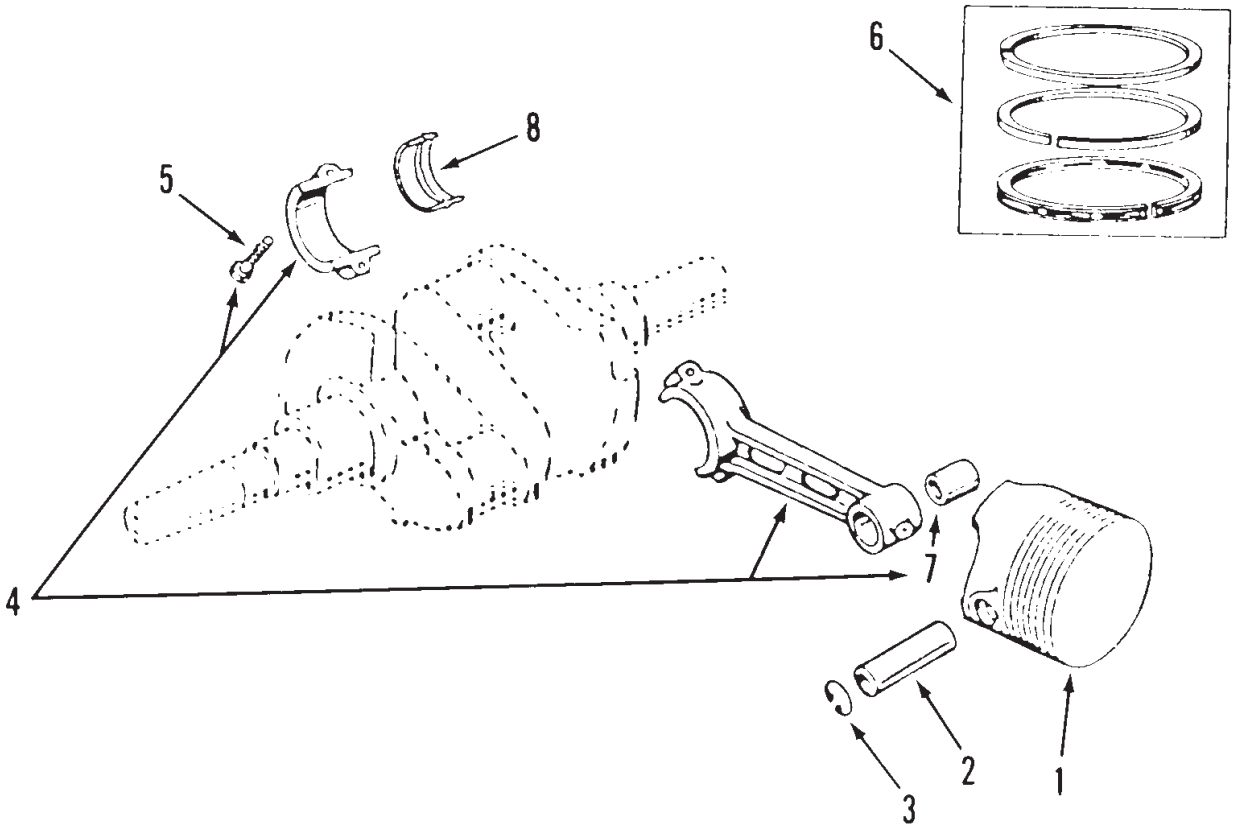

C—1807

PISTON AND ROD

Ref. No.	Part No.	Description	No. Used
1		Piston & Pin (Incl. Pin & Retaining Ring)	
*	92—9804	Standard	2
*	92—0934	.005 Oversize	2
*	92—0935	.010 Oversize	2
*	92—0936	.020 Oversize	2
*	92—0937	.030 Oversize	2
2	92—0938	Pin — Piston	2
3	92—0933	Ring — Retaining	4
4	82—0470	Rod — Connecting (Incl. Bolts)	2
5	82—1470	Bolt — Rod Cap	4

Ref. No.	Part No.	Description	No. Used
6	92—0939	Set — Piston Ring (Std)	2
*	92—0940	.005 Oversize	2
*	94—6787	.010Oversize	2
*	94—6788	.020 Oversize	2
*	94—6789	.030 Oversize	2
7	82—0410	Bushing — Piston Ring	2
8		Bearing	
*	82—0420	Standard	4
*	82—0430	.002 Undersize	4
*	82—0440	.010 Undersize	4
*	82—0450	.020 Undersize	4
*	82—0460	.030 Undersize	4

*Not Illustrated

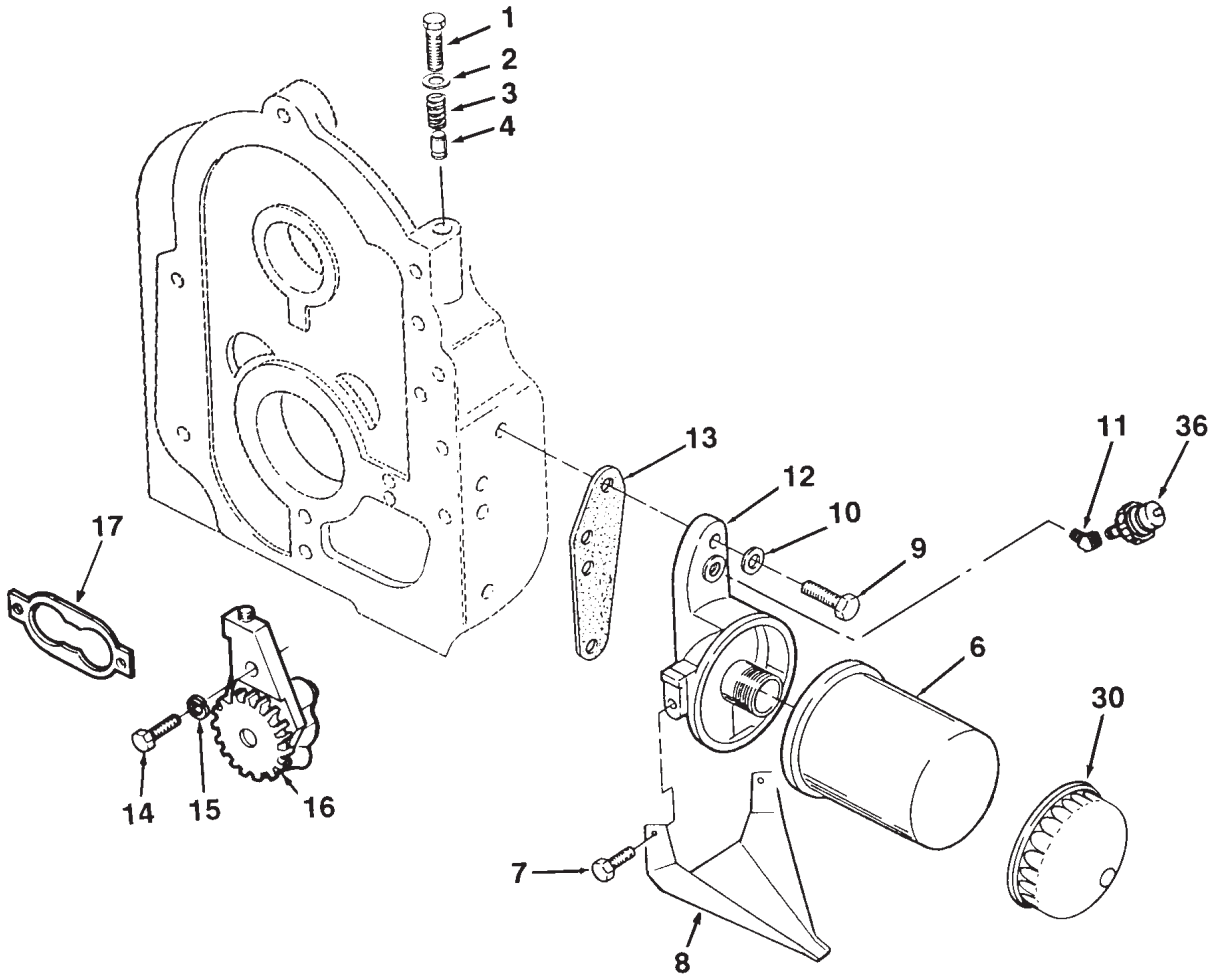

OIL PUMP AND FILTER

Ref. No.	Part No.	Description	No. Used
1	59–1160	Bolt	1
2	57–9760	Washer– Bypass Valve Flat	1
3	59–0280	Spring – Bypass Valve	1
4	57–8470	Valve – Plunger, Bypass	1
6	57–8530	Filter – Oil	1
7	82–1510	Screw – Hex. Hd.	2
8	82–0510	Drain – Oil	1
9	NN10373	Bolt	2
10	57–9750	Washer – Flat, Copper	2

Ref. No.	Part No.	Description	No. Used
11	59–0640	Elbow – Street 45_	1
12	82–0500	Adapter – Oil Filter	1
13	82–0520	Gasket – Adapter	1
14	82–1370	Bolt	1
15	82–1340	Washer – Lock, Spring	2
16	57–8480	Pump – Oil	1
17	57–8460	Kit – Oil Pump Gasket	1
30	NN10775	Wrench – Oil Filter	1
36	94–6401	Switch – Oil Pressure	1

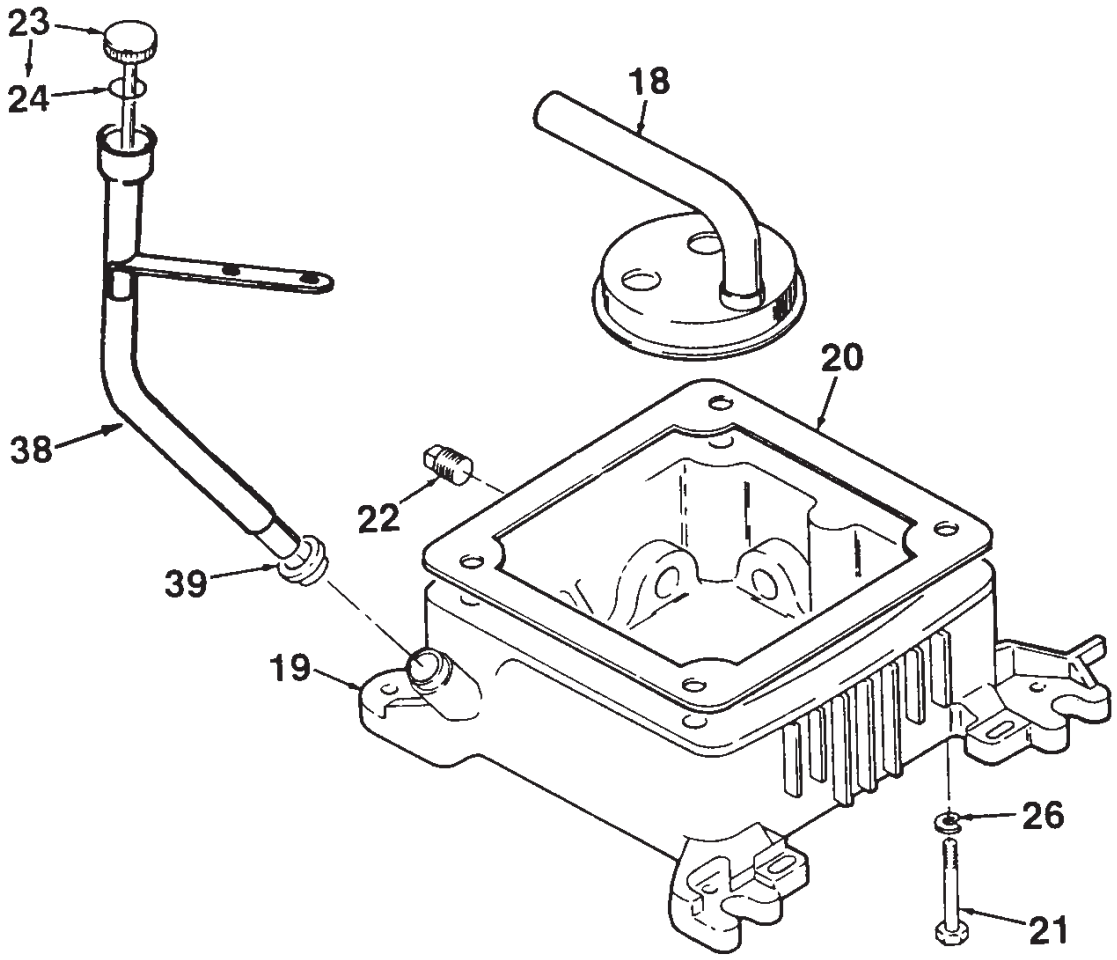

T–0XXX

OIL PAN, FILLER TUBE

Ref. No.	Part No.	Description	No. Used
18	92–0944	Cup – Oil Pump Intake	1
19	92–0942	Base – Oil (Incl. Plugs)	1
20	57–8090	Gasket – Oil Base	1
21	323–25	Screw	4
22	92–0943	Plug – Drain	1
23	82–0590	Oil Fill Cap & Indicator (Incl. O–Ring)	1
24	57–9610	O–Ring – Oil Fill Cap	1
26	82–1310	Washer – Flat	4
38	92–0947	Tube – Oil Fill Spec.	1
39	71–6170	Seal	1

GEARCASE AND IGNITION CONTROLS

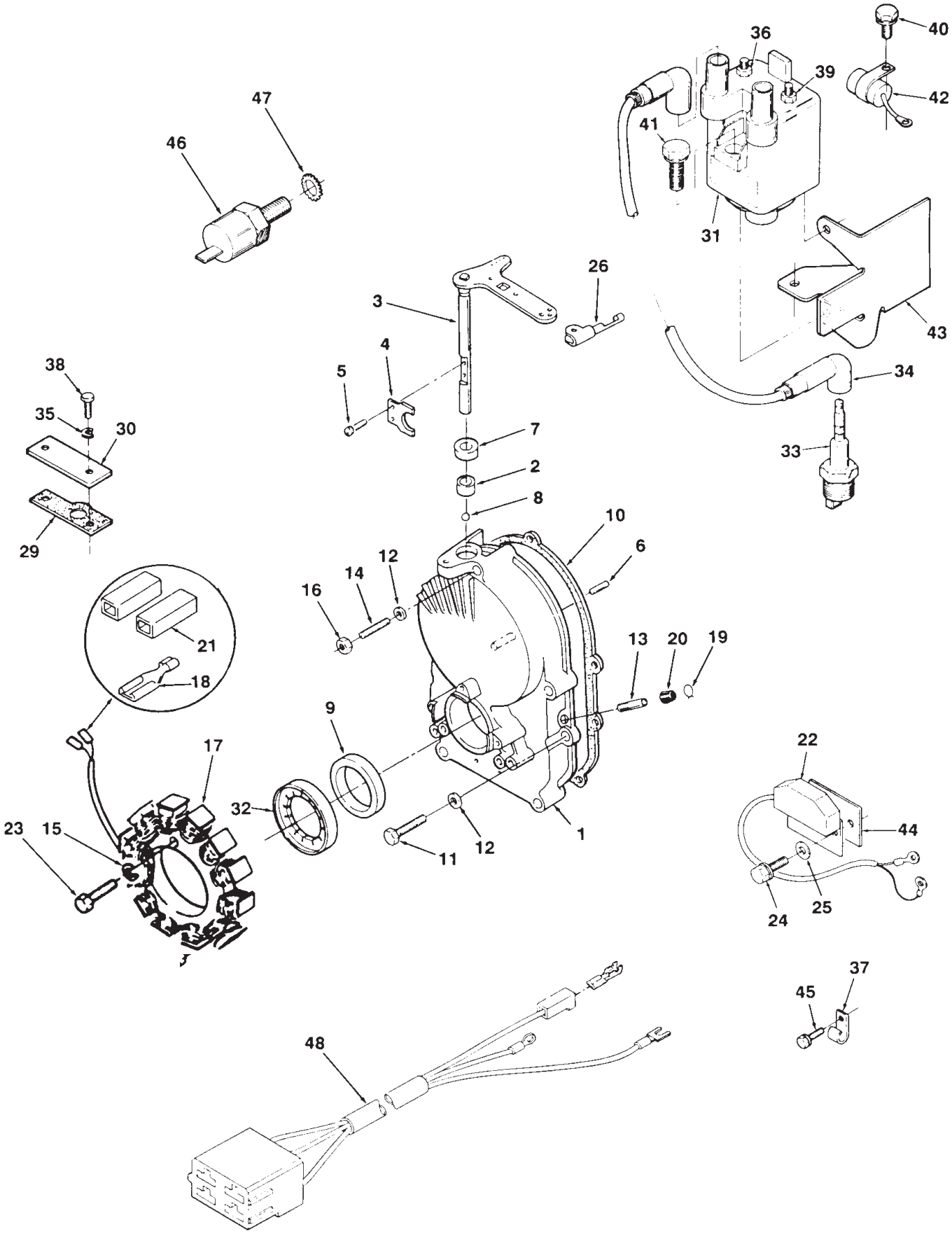

GEARCASE AND IGNITION CONTROLS

Ref. No.	Part No.	Description	No. Used
1	57—8120	Kit — Gearcase (Incl. Ref.#2 thru 9)	1
2	57—9650	Bearing — Governor Shaft	1
3	59—0440	Governor Shaft & Arm	1
4	59—0420	Yoke — Governor Shaft	1
5	59—0950	Screw — Machine, Pan Hd	2
6	59—0740	Pin — Dowel	1
7	57—9570	Seal	1
8	57—9630	Bearing — Ball	1
9	57—9580	Seal	1
10	71—6360	Gasket	1
11	NN10545	Bolt	4
12	57—9750	Washer — Flat, Copper	5
13	59—0360	Tube — Vacuum Port	1
14	59—0790	Stud — Gear Cover	1
15	3253—2	Washer — Lock	3
16	59—1130	Nut	1
17	92—0967	Stator with Terminals	1
18	59—0590	Terminal — Stator Leads	3
19	57—9550	Clamp — Vacuum Port	1
20	59—0370	Cap — Vacuum Port	1
21	82—1000	Kit — Terminal Connector	1
22	71—6380	Control — Ignition	1
23	82—1500	Screw — Machine, Hex. Hd.	3
24	NN10394	Screw — Hex Washer Hd..	2
25	82—1660	Washer — Lock	2
26	57—9730	Clip — Retaining	1
29	57—9260	Gasket — Plate	1
30	71—5990	Cover — Ignition Plunger	1
31	71—6000	Coil Incl. Nuts	1
32	71—6010	Rotor — Ignition	1
33	57—9340	Plug — Spark	2
34	NN10253	Cable — Spark Plug 9”	1
*	57—9350	Cable — Spark Plug 18”	1
35	82—1340	Washer — Lock	2
36	71—6440	Nut — Hex Flange	1
37	71—6220	Clamp — Wire	1
38	82—1360	Screw — Hex. Hd.	1
39	71—6430	Nut — Hex Flange	1
40	59—0970	Screw — Hex. Hd.	1
41	71—6460	Screw — Hex Washer Hd.	2
42	59—1180	Capacitor	1
43	82—0920	Bracket — Ignition Coil	1
44	71—6410	Insulator — Ignition Module	1
45	NN10545	Screw — Hex. Hd.	1
46	NN10274	Switch — Temp. Cut—Off	1
47	NN10924	Washer — Lock	1
48	92—0960	Harness — Wire	1

*Not Illustrated

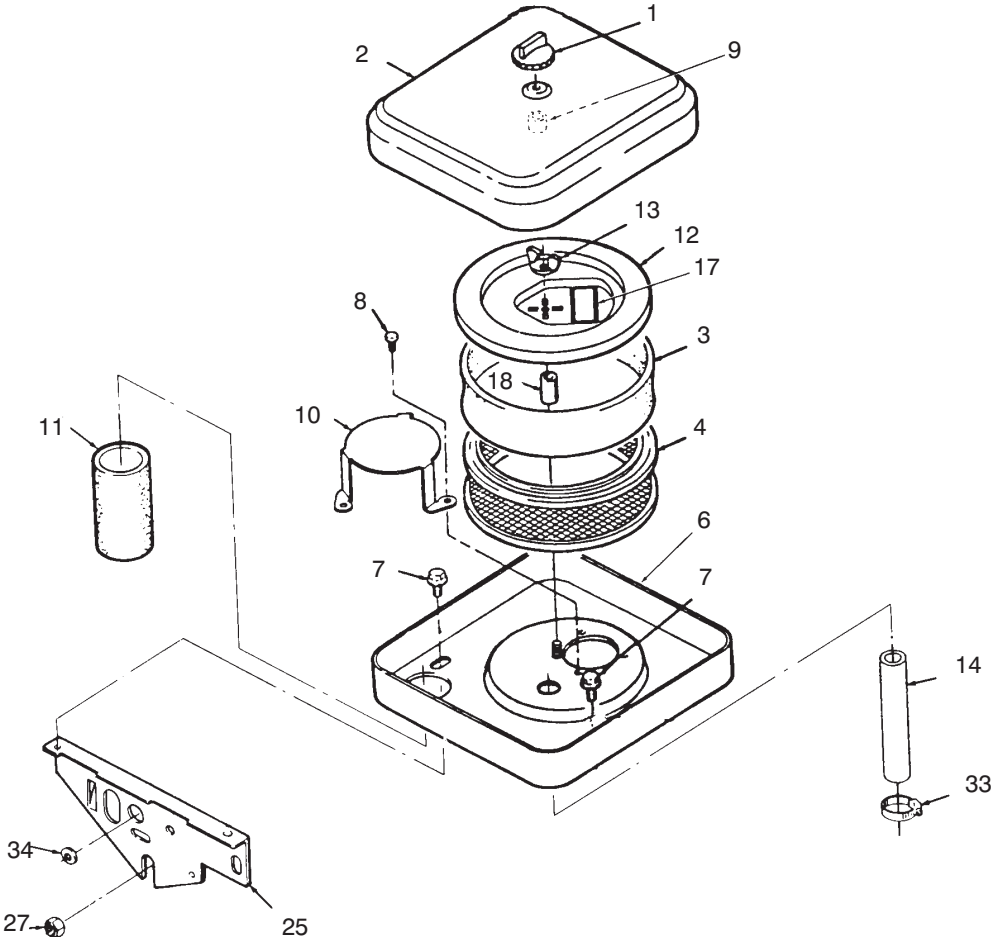

C—1810

AIR CLEANER

Ref. No.	Part No.	Description	No. Used
1	79—6350	Knob	1
2	94—1840	Cover — Air Cleaner	1
3	82—0670	Foam Element — Air Cleaner	1
4	82—0660	Element — Air Cleaner	1
6	NN10926	Housing — Air Cleaner	1
7	82—1550	Screw — Hex Washer Hd.	2
8	92—0915	Screw — Machine, Hex. Hd.	3
9	82—1550	Spacer — Cover	1
10	92—0946	Plate — Air Deflector	1
11	82—0700	Tube — Air Intake	1

Ref. No.	Part No.	Description	No. Used
12	82—0650	Cover — Element	1
13	92—0913	Nut — Wing	1
14	92—0945	Tube — Crankcase Breather	1
17	82—0010	Decal — Air Cleaner Maintenance	1
18	82—0980	Spacer	1
25	82—0720	Support — Air Cleaner	1
27	82—1690	Nut — Hex Washer Hd.	2
33	82—1090	Clamp — Breather Hose	2
34	71—6140	Grommet — Rubber	1

*Not Illustrated

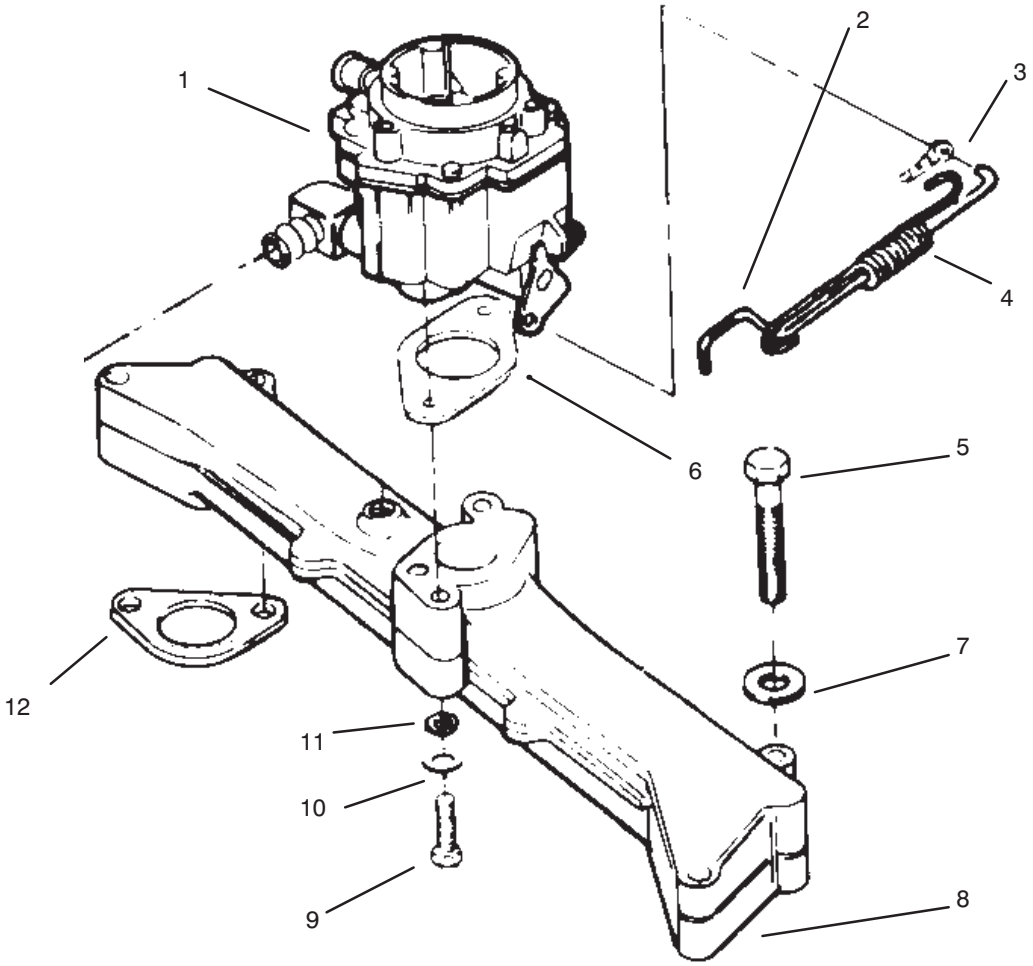

C–

CARBURETOR, INTAKE MANIFOLD

Ref. No.	Part No.	Description	No. Used
+1	94–6049	Kit – Carburetor Low Emission NOT REPAIRABLE	1
2	NN10928	Rod – Governor Control	1
3	57–9700	Clip – Retaining	1
4	NN10877	Spring – Governor Rod	1
5	323–14	Screw – Hex. Hd.	4
6	82–0850	Gasket – Carburetor	1
7	82–1310	Washer – Flat	4
8	82–0870	Manifold – Intake	1
9	NN10927	Screw – Hex. Hd.	2
10	82–1350	Washer – Flat	2
11	82–1340	Washer	2
12	82–0860	Gasket – Manifold to Block	2
+	94–6400	Kit – Main Jet, Fixed	1
+	94–1843	Kit – Float & Gasket	1
+	94–1844	Kit – Accelerator	1

*Not Illustrated

+Not Repairable

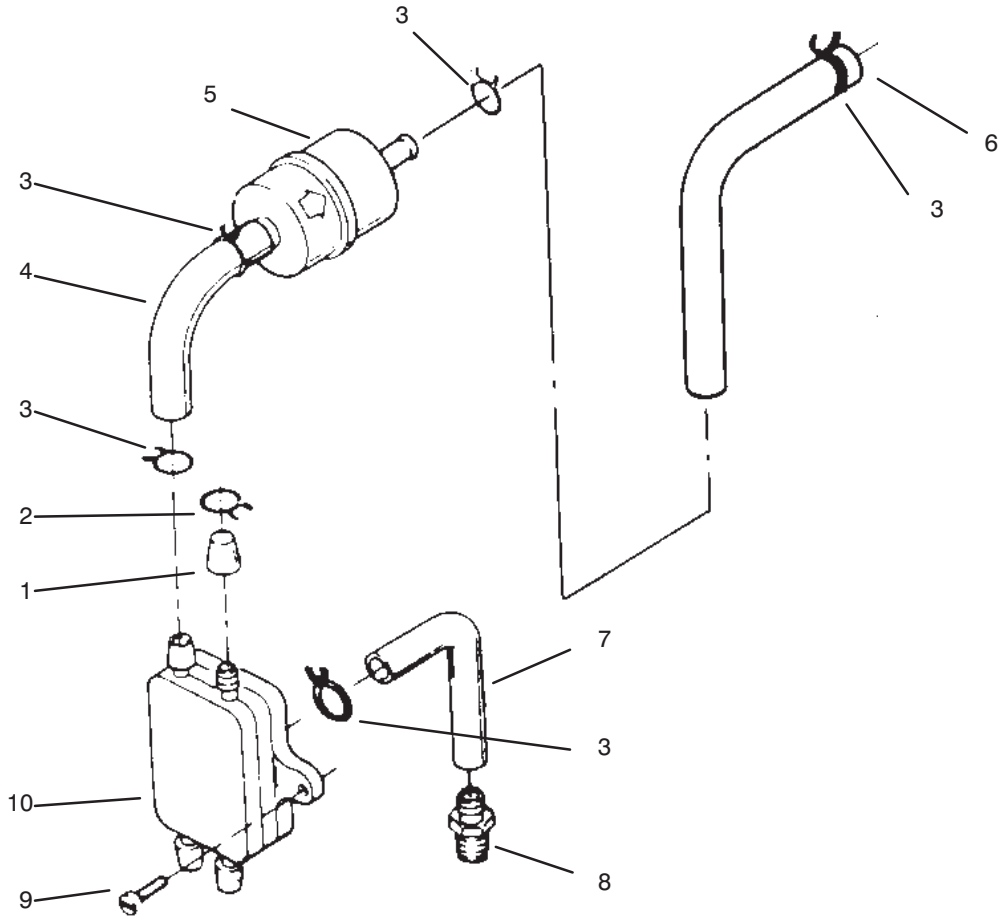

FUEL PUMP

Ref. No.	Part No.	Description	No. Used
1	59–0370	Cap – Fuel Outlet	1
2	57–9550	Clamp – Hose	1
3	82–1080	Clamp – Wire	6
4	71–6120	Hose	1
5	71–5960	Filter – Fuel	1
6	82–1110	Hose – Fuel	1

Ref. No.	Part No.	Description	No. Used
7	71–6100	Hose – Vacuum	1
8	82–1070	Connector – Hose	1
9	NN10403	Screw	1
10	NN10842	Pump – Fuel (Incl. Ref.#1 & 2)	1

*Not Illustrated

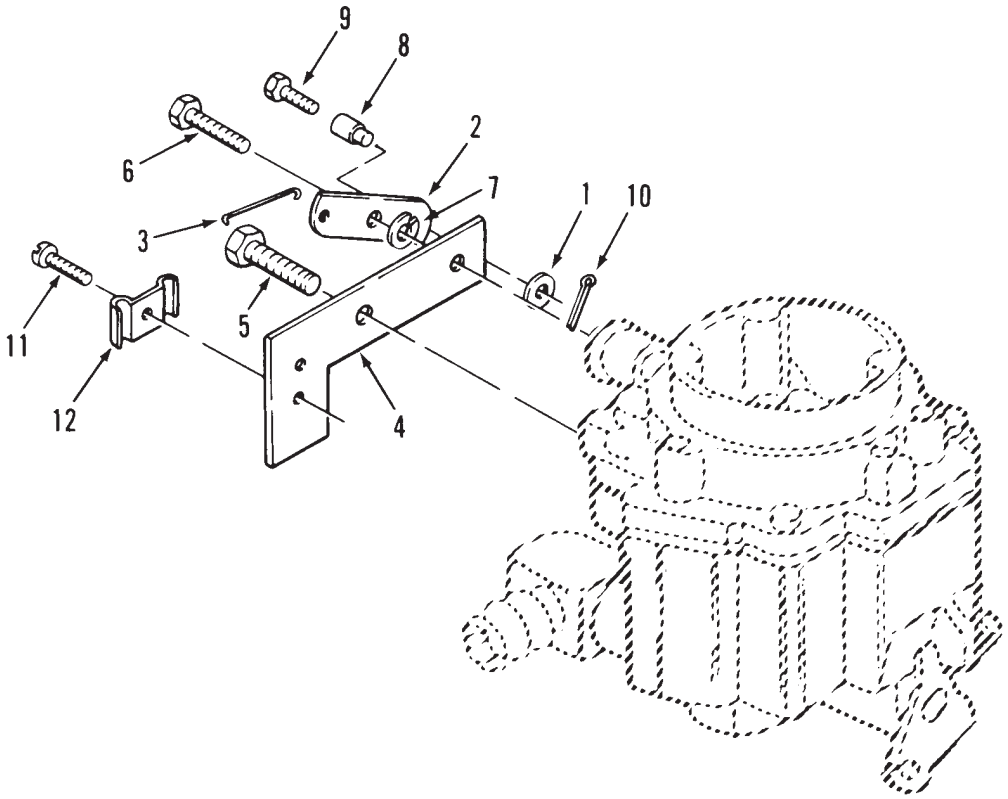

C—1813

CHOKE LINKAGE

Ref. No.	Part No.	Description	No. Used
1	59—0850	Washer — Flat	1
2	59—0460	Lever — Choke	1
3	57—9180	Link — Choke	1
4	59—0470	Bracket — Choke Cable	1
5	72—3880	Screw — Washer Hd.	1
6	59—1020	Screw — Shoulder	1

Ref. No.	Part No.	Description	No. Used
7	82—1660	Washer — Lock	1
8	57—9170	Swivel — Choke Lever	1
9	72—3890	Screw — Machine	1
10	59—0720	Pin — Cotter	1
11	72—3900	Screw — Washer Hd.	1
12	57—9190	Clip — Choke Cable	1

*Not Illustrated

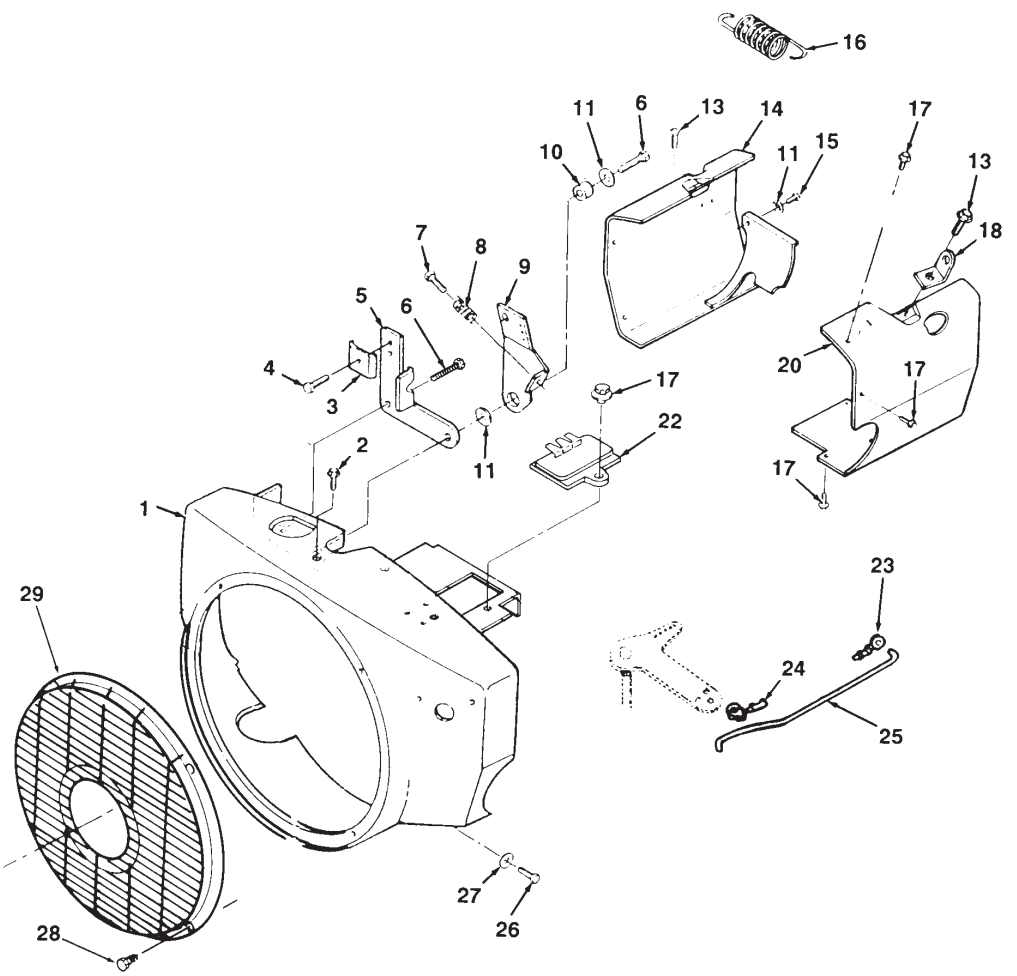

C—1814

BLOWER HOUSING ASSEMBLY

Ref. No.	Part No.	Description	No. Used
1	92—0948	Housing — Blower	1
2	59—1100	Screw — Hex Flange Hd	2
3	57—9190	Clamp — Cable	1
4	72—3900	Screw — Hex. Hd.	1
5	57—9150	Bracket — Cable	1
6	59—1010	Screw — Hex. Hd.	2
7	59—302—5	Screw — Hex. Hd.	1
8	59—0430	Spring — Compression	1
9	57—9140	Arm — Governor Control	1
10	57—9120	Bushing — Control Arm	1
11	59—0830	Washer — Flat	4
13	82—1600	Screw — Hex Washer Hd.	2
14	92—0949	Housing — Air L.H.	1

Ref. No.	Part No.	Description	No. Used
15	59—0980	Screw — Hex Washer Hd.	2
16	57—9100	Spring — Extension	1
17	59—1080	Screw — Hex Washer Hd.	5
18	71—6080	Bracket — Lifting	2
20	92—0950	Housing — Air R.H.	1
22	57—9430	Regulator — Voltage	1
23	57—9700	Clip — Retaining	1
24	57—9730	Clip — Retaining	1
25	NN10928	Rod — Governor Control	1
26	NN10931	Screw — Tapping	3
27	59—0820	Washer — Flat	4
28	82—1590	Screw — Pan Hd	4
29	82—0620	Guard	1

*Not Illustrated

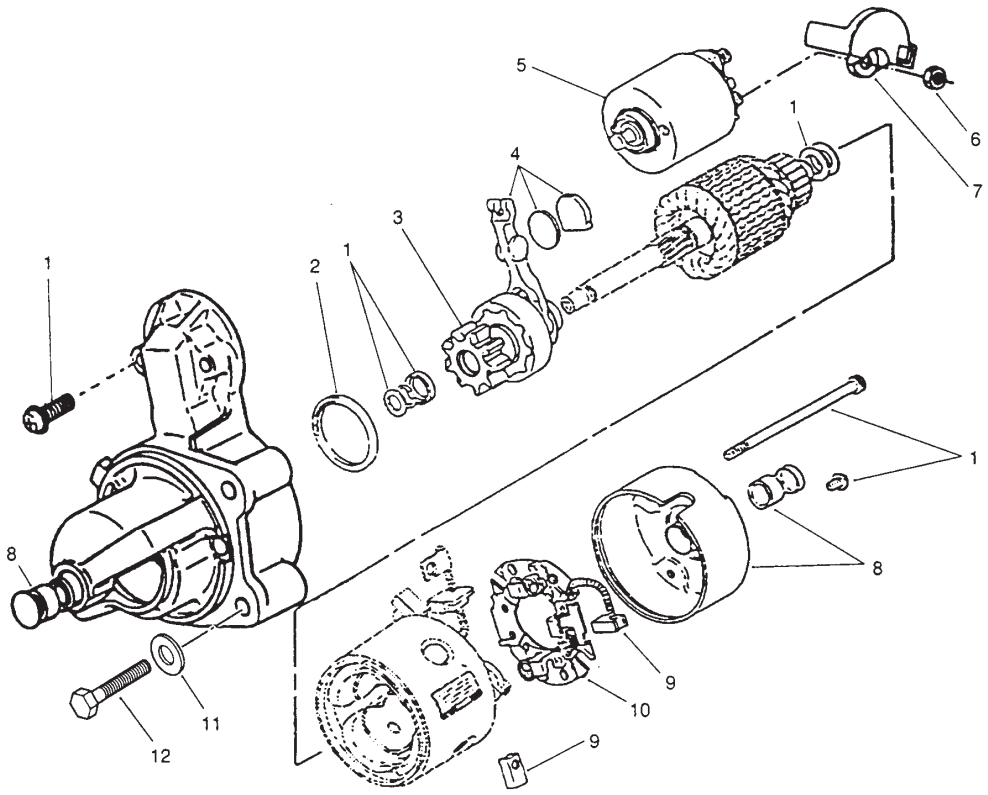

C—1815

STARTER

Ref. No.	Part No.	Description	No. Used
1	62—2760	Kit — Hardware, Starter (Incl. Solenoid Screws, Brush Holder Screws, Thru Bolts, Shims, Pinion Stop Collar, & Pinion Retaining Rings)	1
2	NN10886	Seal — Dust, Starter	1
3	72—3940	Kit — Clutch, Starter	1
4	62—2770	Kit — Shift Lever	1
5	72—3930	Solenoid — Starter	1
6	82—1730	Nut — Hex, Starter	1
7	NN10930	Cap — Starter, Starter	1
8	62—2730	Kit — Bushing, Starter (Incl. Rear Cap, Front & Rear Bushings)	1
9	62—2740	Kit — Brush, Starter (Incl. Ref. #10)	1
10		Holder — Brush, Starter	1
11	57—9770	Washer — Flat	2
12	322—22	Screw — Hex. Hd.	2
13	NN10929	Kit — Mounting Bracket	1
14	57—9770	Washer — Flat	2
*	62—2710	Starter — Complete	1

ELECTRICAL SYSTEM

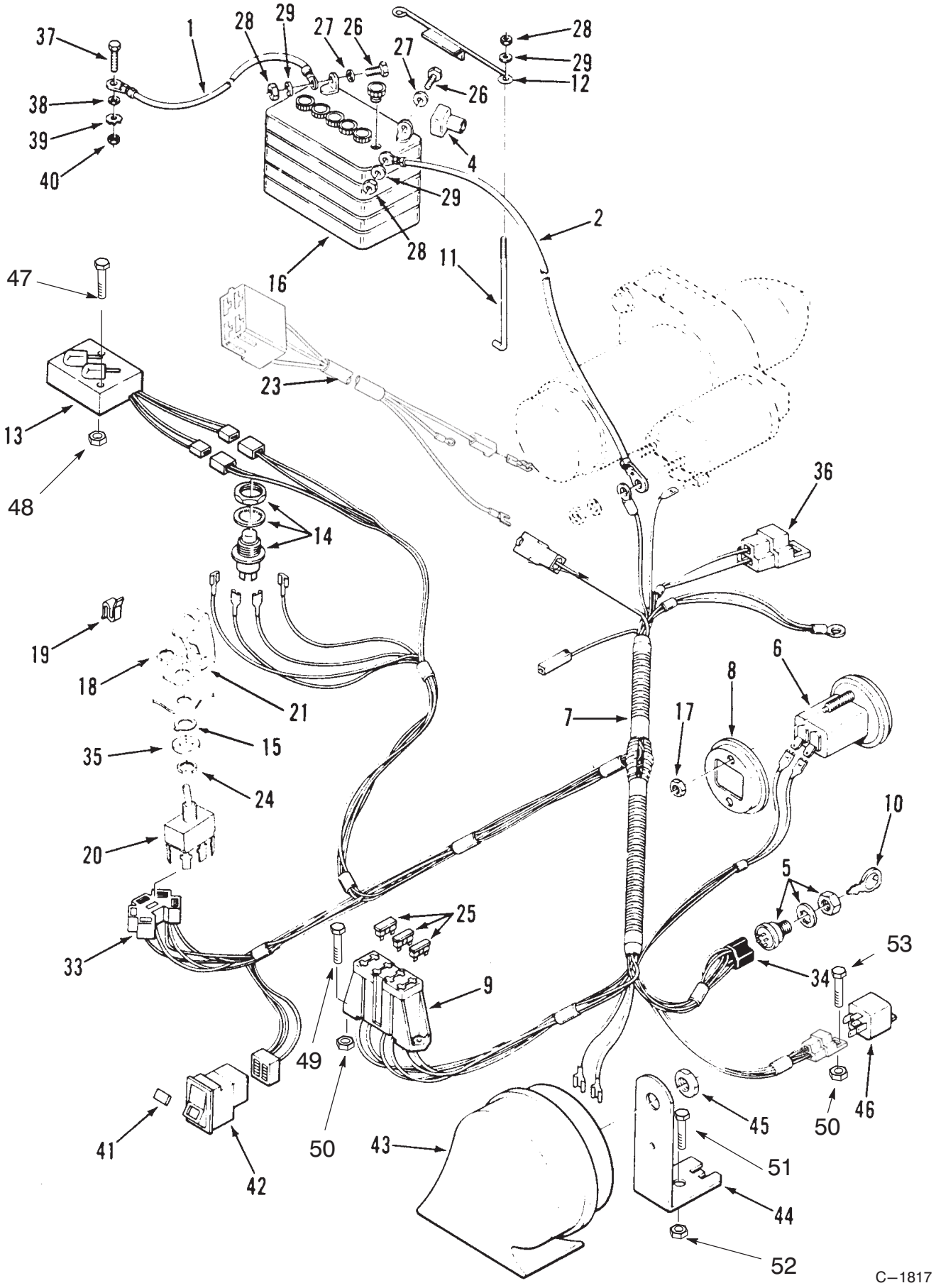

ELECTRICAL SYSTEM

Ref. No.	Part No.	Description	No. Used
1	111078	Cable – Battery to Ground	1
2	115023	Solenoid – Battery to Starter	1
4	109553	Boot – Terminal	1
5	103990	Switch – Ignition (Incl. Nut 101884 & Screw 103990)	1
6	78–0020	Hourmeter (Incl. Ref. # 8)	1
7	92–9810	Harness – Wiring (Incl. Ref.#9, 33, & 34)	1
8	78–3320	Bracket – Gauge Mounting	1
9	109117	Block – Fuse	1
10	62–7770	Key	1
11	113969	Hook	2
12	113010	Hold Down – Battery	1
13	116237	Switch – Parking Brake	1
14	116194	Switch – Seat	1
15	102950	Washer – Tab	1
16	115877	Battery	1
17	3217–27	Nut – Keps	1
18	113179	Nut – Special	1
19	519337	Clip – Cable	1
20	92–9811	Switch – PTO	1
21	113050	Cover – PTO Switch	1
23	94–6402	Harness – Wiring, Engine (Inc. Ref.#32)	1
24	105805	Nut – Switch	1
25	109355	Fuse – 15 Amp ATO or ATC	1
*	109102	Fuse – 25 Amp ATO or ATC	1
*	NN10277	Fuse – 30 Amp ATO or ATC	1

Ref. No.	Part No.	Description	No. Used
26	321–4	Bolt	2
27	3256–22	Washer	2
28	32103–22	Nut Wing	2
29	3253–3	Washer – Lock	2
33		Connector – PTO Switch	1
34	105302	Connector – Ignition Switch	1
35	920242	Spacer	1
36	109357	Connector – Electric Clutch	1
37	321–4	Bolt	1
38	3256–22	Washer	1
39	3253–3	Washer – Lock	1
40	3217–5	Nut	3
41	116753	Lens – Engine Temp.	1
42	116752	Switch – Test (Incl. Ref.#41)	1
43	116749	Horn And Bracket Assembly (Inc. Ref.# 44 & 45)	1
44	116755	Bracket – Horn	1
45	3296–65	Nut	1
46	48–4700	Relay	1
47	9107964	Screw	2
48	32149–7	Nut	2
49	3290–134	Screw	2
50	3296–2	Nut	3
51	322–3	Screw	1
52	3296–29	Nut – Lock	1
53	32105–2	Screw	1

*Not Illustrated

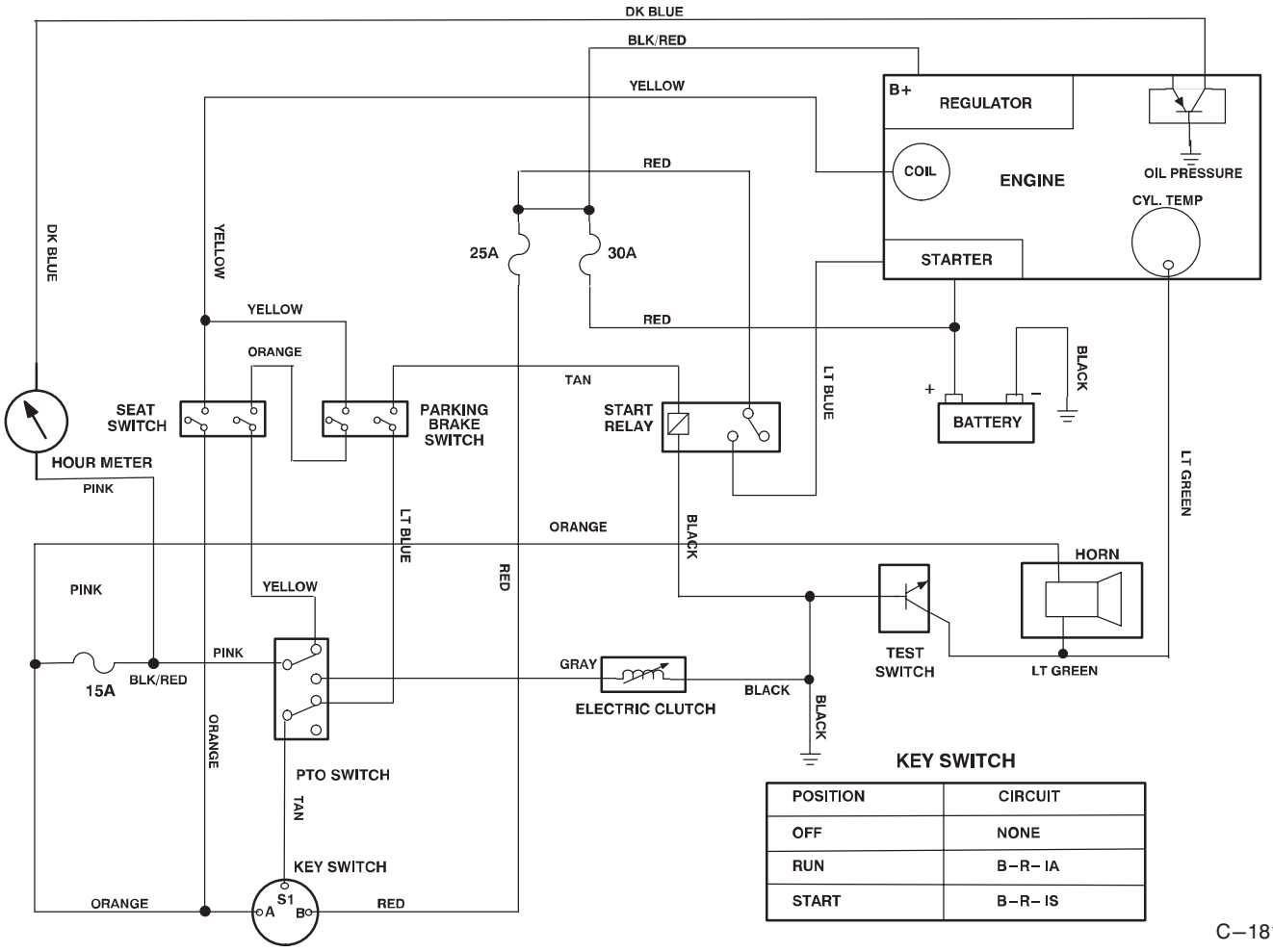

KEY SWITCH

POSITION	CIRCUIT
OFF	NONE
RUN	B–R– IA
START	B–R– IS

C–1816

ELECTRICAL SCHEMATIC

Ref. No.	Part No.	Description	No. Used
*	92–9810	Wire Harness	1

Ref. No.	Part No.	Description	No. Used

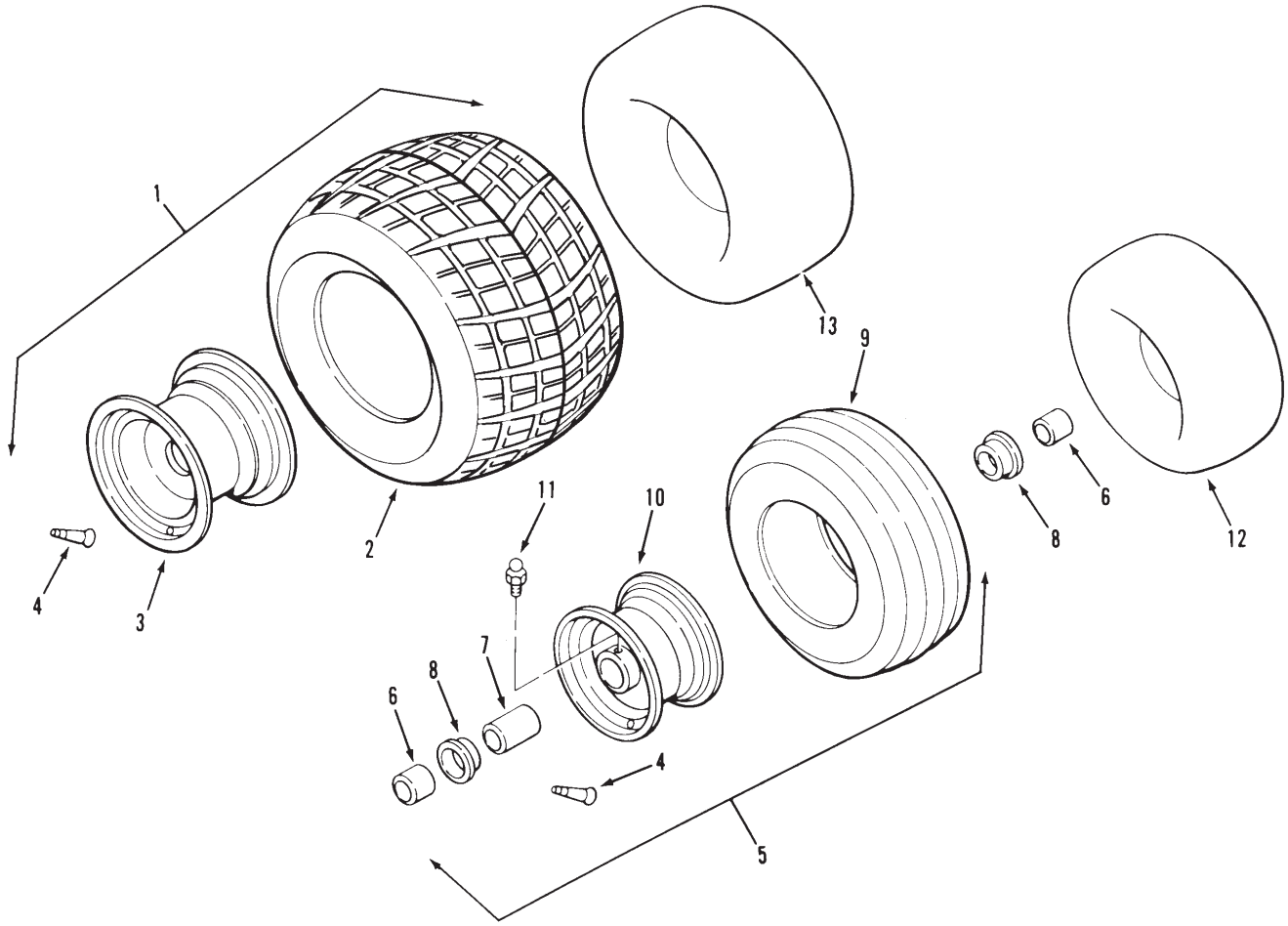

C–1818

WHEELS AND TIRES

Ref. No.	Part No.	Description	No. Used
1		Rear Wheel & Tire – 21 x 11.00–8 (Incl. Ref. # 2, 3, & 4)	1
*		Rear Wheel & Tire, Knobby 21 X 12.00–8 (Incl. Ref.# 2*, 3*, & 4) Optional	1
2	116973	Tire – Turf Trac, Rear	2
*	88–6530	Tire – Knobby, Rear	2
3	117006	Wheel – Rear, Silver	2
*	111917	Wheel – Rear	2
4	5108	Stem – Valve	4
5		Front Wheel & Tire Assy (Incl. Ref.# 7, 8, 9, & 10)	2
6	92–1715	Spacer – Front Wheel	4
7	10204	Spacer – Front Wheel Inner	2
8	10205	Bearing – Front Wheel	4
9	83–3560	Tire – Front 13 x 5.00–6	2
10	111916	Wheel – Front, Silver	2
11	302–5	Fitting – Grease	2
12	5712	Tube – Front	2
13	10127	Tube – Rear	2

*Not Illustrated

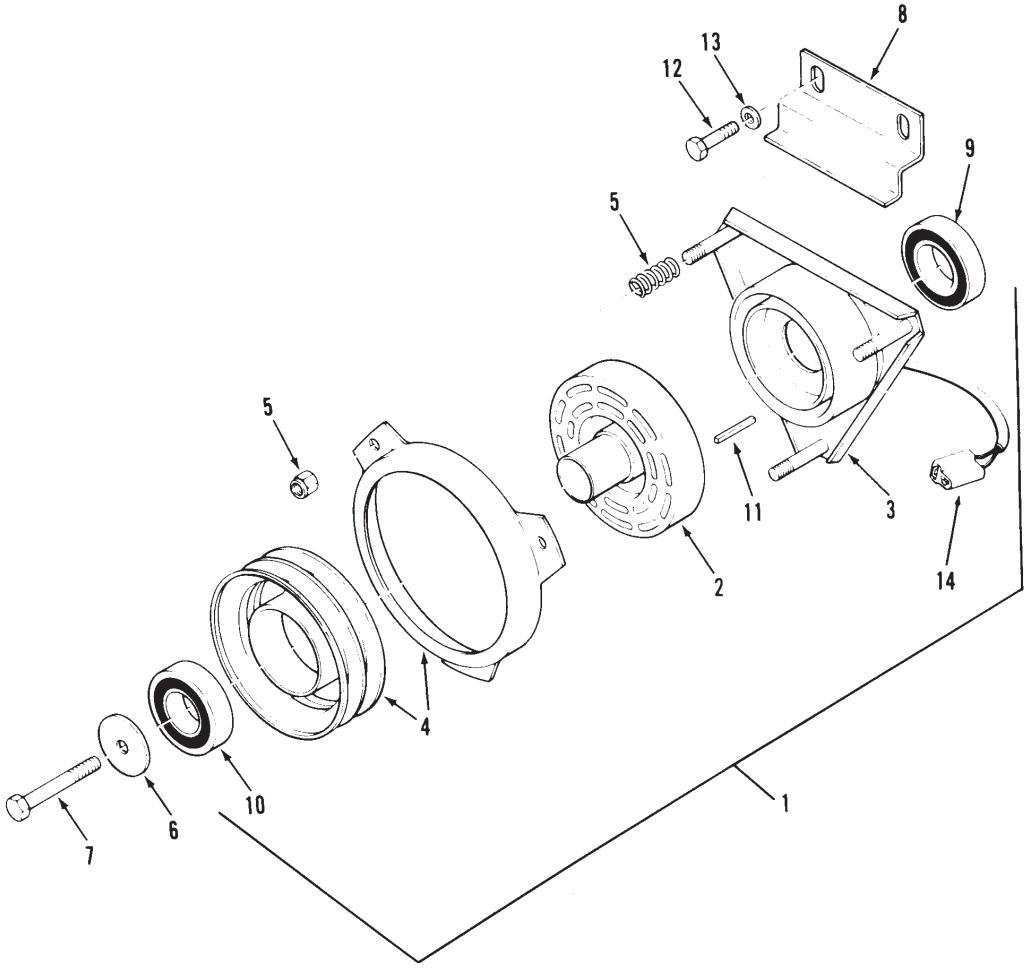

C–1819

P.T.O. ELECTRIC CLUTCH

Ref. No.	Part No.	Description	No. Used
1	93–3160	Electric Clutch – Complete (Incl. Ref.# 2, 3, 4, 5, 9, 10, & 14)	1
2	93–3176	Rotor & Armature Asm (Incl. Ref. #4 &10)	1
3	115134	Field (Incl. Ref. #9)	1
5	113823	Kit – Spring & Nuts	1
6	113602	Retainer – Bearing	1

Ref. No.	Part No.	Description	No. Used
7	3211–5	Bolt	1
8	113674	Bracket	1
9	115170	Bearing	1
10	114064	Bearing	1
11	1121	Key	1
12	323–4	Bolt	2
13	3256–24	Washer	2
14	110459	Connector	1

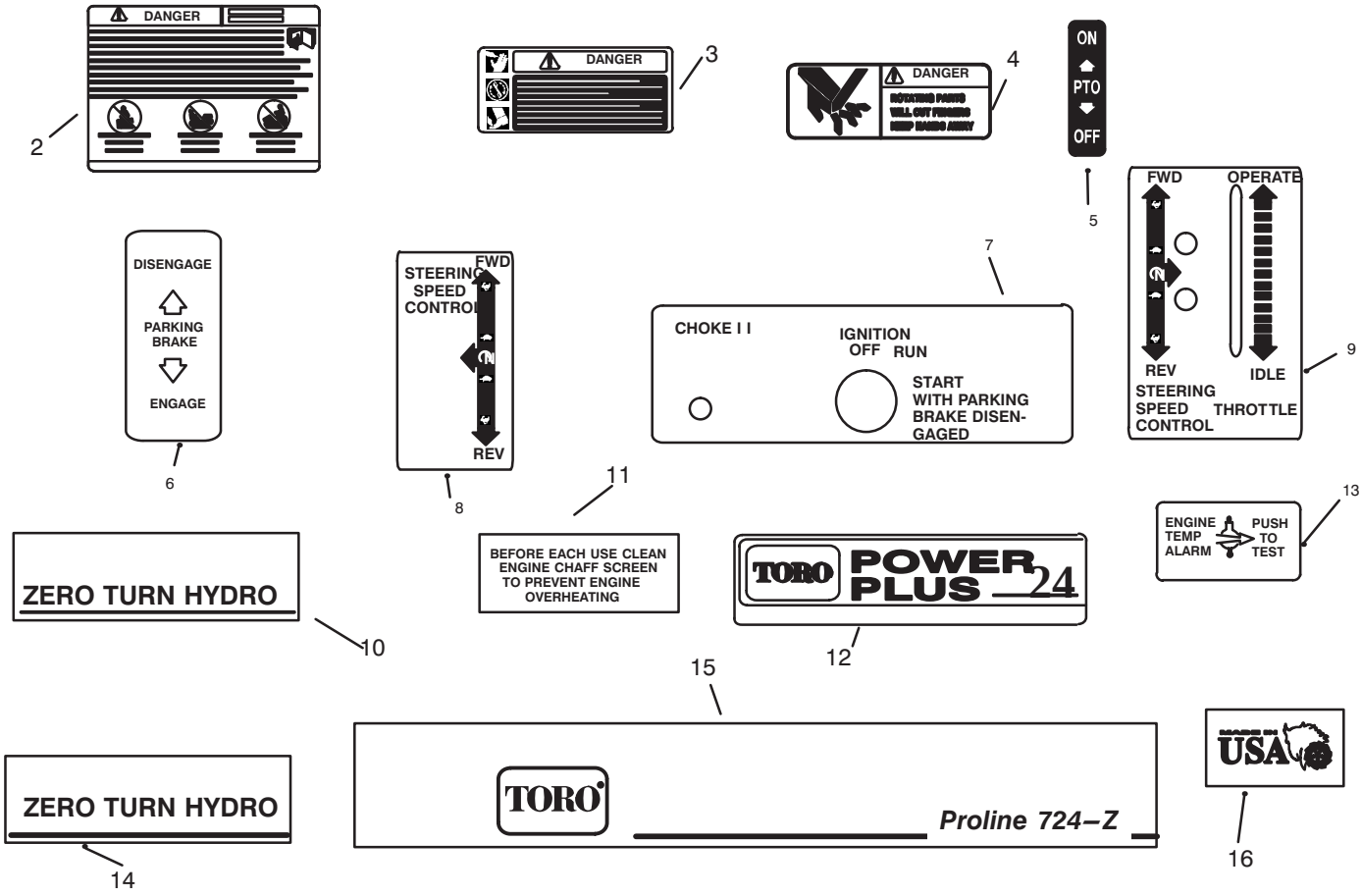

C–1821

DECALS

Ref. No.	Part No.	Description	No. Used
2	92–2504	Decal – Danger	1
3	92–2500	Decal – Danger	2
4	88–2790	Decal – Danger	2
5	112845	Decal – PTO	1
6	92–2502	Decal – Parking Brake	1
7	114574	Decal – Choke – Ignition	1
8	92–2501	Decal – Speed Control	1
9	92–2503	Decal – Steering/Throttle	1

Ref. No.	Part No.	Description	No. Used
10	92–2505	Decal – Zero Turn RH	1
11	115094	Decal – Engine Screen	1
12	118570	Decal – Power Plus	1
13	92–2369	Decal – Temperature Alarm	1
14	92–2506	Decal – Zero Turn LH	1
15	92–2509	Decal – Proline 724–Z	1
16	76–1340	Decal – Made in USA	1

*Not Illustrated

SEAT

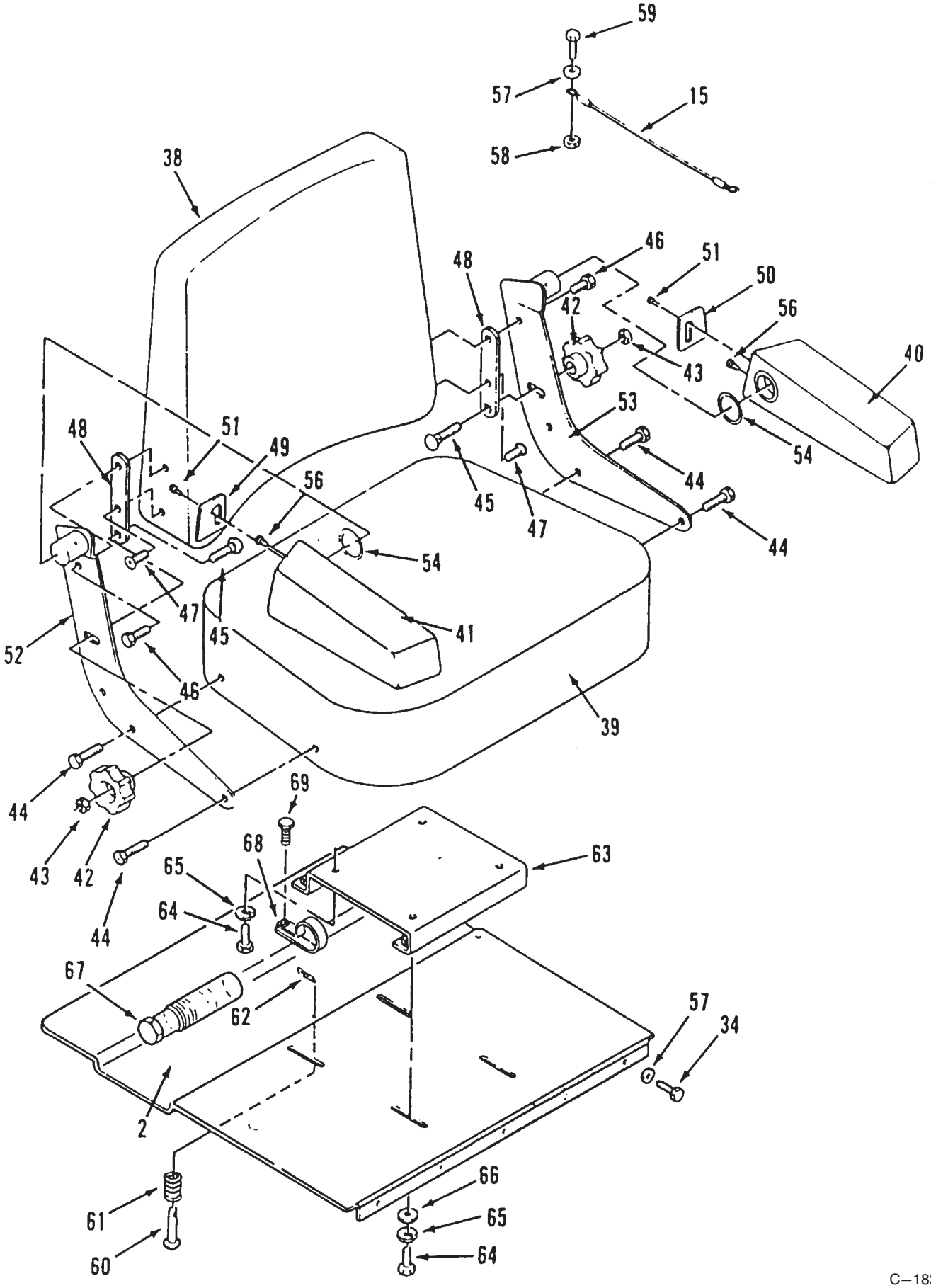
59
57
15
58
38
46
51
48
50
42
56
43
40
53
48
51
49
54
44
56
45
47
44
54
47
41
52
45
46
39
44
69
68
63
43
42
65
64
44
67
62
57
34
2
66
61
65
60
64

C–1820

SEAT

Ref. No.	Part No.	Description	No. Used
2	92—4075	Bracket — Seat Mounting	1
15	115850	Cable — Seat	1
34	32144—4	Bolt	5
38	88—2150	Seat — Back	1
39	88—2160	Seat — Bottom	1
40	40103	Arm Rest — LH	1
41	40104	Arm Rest — RH	1
42	88—3250	Knob — Lumbar Control	2
43	88—3250	Nut — Lock	2
44	325—5	Bolt	4
45	3231—4	Bolt — Carriage	2
46	323—4	Bolt	2
47	908849	Screw — Phillips Hd	2
48	88—3300	Plate — Lumbar Friction	2
49	40224	Plate — Arm Rest Cover, RH	1
50	40225	Plate — Arm Rest Cover, LH	1
51	S102	Screw	2
52	88—3310	Support — Back, LH	1
53	40226	Support — Back, RH	1
54	W114	Washer	2
56	911037	Screw	2
57	3256—2	Washer	8
58	3296—42	Nut	2
59	321—4	Bolt	2
60	106449	Pin	1
61	116195	Spring	1
62	3272—7	Pin — Cotter	2
63	113585	Support — Seat	1
64	323—4	Bolt	8
65	3256—21	Washer — Lock	8
66	3256—24	Washer — Flat	4
67	74—0720	Tube — Manual	1
68	2412—120	Clamp — Tube	2
69	32144—1	Screw	2
*	113698	Seat Asm. (Incl. all Items except #2, 34, 57, & 60 thru 66)	1

*Not Illustrated

TORO PART NUMBER INDEX

Part No.	Description	Pg. No.	Ref. No.	Qty.
1121	Key	36	11	1
2844	Washer	3	19	2
2844	Washer	3	29	4
2844	Washer	9	16	2
2844	Washer	13	1	2
5108	Stem – Valve	35	4	4
5712	Tube – Front	35	12	2
6331	Spacer	17	25	2
6392	Link – Master	15	28	2
7059	Clip	17	17	1
8830	Clip	17	4	2
8830	Clip	3	22	1
8830	Clip	2	23	3
9547	Washer – Thrust	2	13	2
9548	Washer – Thrust	2	16	2
10127	Tube – Rear	35	13	2
10204	Spacer – Front Wheel Inner	35	7	2
10205	Bearing – Front Wheel	35	8	4
28534	Plug – Pipe	5	5	1
40103	Arm Rest – LH	39	40	1
40104	Arm Rest – RH	39	41	1
40224	Plate – Arm Rest Cover, RH	39	49	1
40225	Plate – Arm Rest Cover, LH	39	50	1
40226	Support – Back, RH	39	53	1
100305	Washer – Friction	17	22	2
100307	Ring – Retaining	15	15	1
100365	Washer – Lock	17	12	2
102950	Washer – Tab	33	15	1
103990	Switch – Ignition	33	5	1
103995	Washer	13	9	1
104047	Bushing	17	33	2
104048	Valve Assembly – Fuel	17	39	2
104859	Spacer	9	15	2
105014	Cable – Throttle	17	15	1
105302	Connector – Ignition Switch	33	34	1
105805	Nut – Switch	33	24	1
106449	Pin	39	60	1
107675	Washer – Rubber	11	17	2
108571	Washer – Spring	13	6	4
108881	Nut	17	21	2
109002	Link – Connecting	3	4	2
109102	Fuse – 25 Amp ATO or ATC	33	*	1
109117	Block – Fuse	33	9	1
109355	Fuse – 15 Amp ATO or ATC	33	25	1
109357	Connector – Electric Clutch	33	36	1
109553	Boot – Terminal	33	4	1
110459	Connector	36	14	1
111078	Cable – Battery to Ground	33	1	1
111357	Clip	11	7	1
111879	Fitting – Fuel Line	17	36	2
111887	Sprocket – Idler	3	1	2
111891	Pan – Floor	11	14	1
111909	Bracket – Fender, RH Rear	11	5	1
111910	Bracket – Fender, LH Rear	11	*	1
111911	Bracket – Fender, RH Front	11	1	1
111912	Bracket – Fender, LH Front	11	*	1
111916	Wheel – Front, Silver	35	10	2
111917	Wheel – Rear	35	*	2
111922	Grip – Handle	17	14	1
112304	Bracket – Chain Tensioner	3	28	2
112589	Cover – Reservoir	7	11	2
112590	Body – Reservoir	7	12	2
112591	Seal – Ring, Sq	7	13	2
112593	Ring – External Retaining	7	15	2
112594	Washer – Control Shaft	7	16	2
112596	Seal – Ring, Sq	7	23	2
112597	Rotor & Balls Assembly	7	24	2
112599	Rotor & Balls Assembly	7	27	2
112601	Ring – Retaining	7	7	2
112602	Bearing – Ball, Input	7	8	2
112603	Shaft – Input	7	9	2
112605	Seal – Oil	7	2	2
112606	Kit – Control Shaft	7	1	2
112607	Insert – Cam Ring	7	33	2
112609	Body – Check Valve	7	31	4
112612	Spring – Piston	7	28	10
112615	Shaft Assembly – Output	7	43	2
112618	Kit – Overhaul Sealing	7	44	
112619	Ring Sub–Assembly – Cam	7	25	2
112620	Body Assembly	7	40	2
112625	Kit – Cover	7	14	1
112626	Fitting – Guide Assembly	7	19	2
112627	O–Ring	7	22	2
112628	Bracket & Pins Assembly	7	21	2
112629	Spring – Dump Valve	7	20	4
112630	Pintle Assembly – Used in	7	26	1
112631	O–Ring	7	5	2
112632	Kit – Gasket Asm.,	7	44	1
112633	Valve – Dump	7	3	2
112845	Decal – PTO	37	5	1
112941	Nut – Hex, Special	15	17	1
112954	Pedal – Foot	15	1	1
112955	Link – Pivot	15	5	1
112956	Arm – Lift Pawl	15	6	1
112957	Lever Arm & Sprocket Assy	15	7	1
112958	Sprocket – Height Control	15	8	1
113010	Hold Down – Battery	33	12	1
113050	Cover – PTO Switch	33	21	1
113081	Spring – Foot, Short	15	3	1
113081	Spring – Neutral	9	12	4
113149	Pin	15	9	1
113179	Nut – Special	33	18	1
113509	Bushing – Nylon	9	14	8
113518	Sprocket & Drum #50	13	5	2
113529	Axle Hub Bearing – Inner	2	25	2
113530	Axle Hub Bearing – Outer	2	1	2
113531	Bearing – Pillow Block	3	10	4
113567	Shim – Bearing	3	11	A/R
113568	Transmission – Hydrostatic,	4	21	1
113569	Transmission – Hydrostatic,	4	11	1
113570	Linkage – Drive, Upper	9	18	2
113578	U–Joint – Double	4	6	1
113585	Support – Seat	39	63	1
113602	Retainer – Bearing	36	6	1
113623	Yoke – Threaded	13	12	2
113624	Bands – Brake	13	4	2
113632	Spring	9	23	4
113633	Pulley – Flat Idler	2	9	1
113640	Gear Box – Peerless 794381	4	15	1
113650	Fan– RH Counterclockwise	4	19	1
113659	Fender – LH	11	11	1
113663	Spider – Coupling	4	17	2
113665	Spacer	13	21	1
113668	Rod Assembly – Brake	13	20	1
113671	Jackshaft	3	6	2
113674	Bracket	36	8	1

*Not Illustrated

TORO PART NUMBER INDEX (Continued)

Part No.	Description	Pg. No.	Ref. No.	Qty.
113675	Bushing – Bronze	9	30	2
113680	Arm – Hydro Control	9	6	2
113684	Sprocket Assembly	15	21	1
113687	Bearing – Flanged	15	22	4
113688	Bolt – Eye	9	10	4
113690	Nut – Coupling Rod	13	2	1
113691	Chain – Primary	3	5	2
113693	Control – Choke	17	13	1
113697	Bolt – Eye	15	27	2
113698	Seat Asm.	39	*	1
113699	Chain – Link, Mower Deck	15	29	2
113823	Kit – Spring & Nuts	36	5	1
113969	Hook	33	11	2
114064	Bearing	36	10	1
114183	Spring – Foot, Long	15	4	1
114294	Clamp – Cross Shaft	15	24	1
114295	Sprocket	2	26	1
114497	Spring – Seat	3	16	4
114574	Decal – Choke – Ignition	37	7	1
114613	Pin – Clevis	15	14	1
114661	Pivot – Steering Lever LH	9	31	1
114662	Pivot – Steering Lever RH	9	*	1
115023	Solenoid – Battery to Starter	33	2	1
115094	Decal – Engine Screen	37	11	1
115101	Bushing	2	10	1
115102	Pulley – V–Idler	2	8	1
115134	Field	36	3	1
115170	Bearing	36	9	1
115200	Edge – Trim	3	27	1
115226	Cap	2	21	2
115295	Bushing	9	35	1
115793	Rod – Brake LH	13	23	1
115794	Rod – Brake RH	13	15	1
115850	Cable – Seat	39	15	1
115855	Chain – Foot Pedal	15	2	1
115856	Coupler – LJ, .875 x .1875	4	18	2
115857	Coupler – LJ, .670 x .125	4	16	2
115877	Battery	33	16	1
115960	Clip – Dump Valve	4	12	2
116194	Switch – Seat	33	14	1
116195	Spring	39	61	1
116237	Switch – Parking Brake	33	13	1
116460	Bolt – Shoulder	9	28	2
116478	Lever – Parking Brake	13	16	1
116735	Chain – Secondary	3	3	2
116749	Horn And Bracket Assembly	33	43	1
116752	Switch – Test	33	42	1
116753	Lens – Engine Temp.	33	41	1
116755	Bracket – Horn	33	44	1
116839	Bumper	3	17	2
116888	Frame – Transaxle	3	14	1
116973	Tire – Turf Trac, Rear	35	2	2
117006	Wheel – Rear, Silver	35	3	2
117295	Bracket – Gearbox	4	5	1
117560	Lever – Steering RH	9	*	1
117561	Lever – Steering LH	9	2	1
117580	Muffler	17	10	1
118570	Decal – Power Plus	37	12	1
519337	Clip – Cable	33	19	1
908849	Screw – Phillips Hd.	39	47	2
911037	Screw	39	56	2
915585	Nut – Wing	11	12	2
920242	Spacer	33	35	1
920251	Washer	2	14	4
937082	Key – Woodruff	9	5	2
937218	Key – Hi–Pro	4	1	4
937225	Key – Hi–Pro	4	10	3
9107964	Screw	33	47	2
9202254	Washer	15	30	2
9335044	Pin – Cotter	9	41	2
14–9079	Bracket & Cable – Throttle	17	24	1
NN10026	Crankshaft	20	19	1
NN10045	Cover – Valve	18	5	2
NN10253	Cable – Spark Plug 9	25	34	1
NN10274	Switch – Temp. Cut–Off	25	46	1
NN10277	Fuse – 30 Amp ATO or ATC	33	*	1
NN10373	Bolt	22	9	2
NN10394	Screw – Hex Washer Hd.	25	24	2
NN10403	Screw	28	9	1
NN10545	Bolt	25	11	4
NN10545	Screw – Hex. Hd.	25	45	1
NN10775	Wrench – Oil Filter	22	30	1
NN10842	Pump – Fuel	28	10	1
NN10877	Spring – Governor Rod	27	4	1
NN10886	Seal – Dust, Starter	31	2	1
NN10923	Kit – Gasket,	19	47	1
NN10924	Washer – Lock	25	47	1
NN10926	Housing – Air Cleaner	26	6	1
NN10927	Screw – Hex. Hd.	27	9	2
NN10928	Rod – Governor Control	27	2	1
NN10928	Rod – Governor Control	30	25	1
NN10929	Kit – Mounting Bracket	31	13	1
NN10930	Cap – Starter, Starter	31	7	1
NN10931	Screw – Tapping	30	26	3
82–0880	Camshaft (Incl. Center Pin)	20	1	1
47–2966	Line – Fuel (5”)	17	38	1
47–2967	Line – Fuel (29.5”)	17	34	2
48–4700	Relay	33	46	1
55–3570	Cap – Fuel	17	31	1
56–2820	Seal – Oil	7	10	2
56–2880	Button	7	17	2
56–2980	Pin – Coil	7	32	4
56–3000	Ring – Retaining	7	29	4
56–3010	Ball	7	30	4
56–3100	Screw – Socket Hd.	7	41	4
56–3250	Plug Assembly – O–Ring	7	34	2
56–3260	O–Ring	7	39	2
56–3290	Ring – Retaining	7	6	2
57–8000	Bearing – Camshaft	18	16	2
57–8010	Gasket – Bearing Plate	18	14	1
57–8020	Bearing – Flanged	19	37	1
57–8030	Bearing – Flanged Sleeve	19	*	1
57–8050	Bearing – Crankshaft	18	12	1
57–8060	Bearing – Crankshaft,	18	*	1
57–8090	Gasket – Oil Base	23	20	1
57–8120	Kit – Gearcase	25	1	1
57–8140	Washer – Gear Retaining	20	21	1
57–8150	Bolt – Special	20	11	1
57–8160	Washer – Crankshaft	18	13	2
57–8170	Shim – Crankshaft	19	38	A/R
57–8180	Ring – Gear	20	17	1
57–8210	Gear – Camshaft	20	5	1
57–8230	Washer – Thrust	20	4	1
57–8250	Spring – Valve	19	27	4
57–8270	Rotator – Valve	19	30	2
57–8450	Tappet – Valve STD	19	29	4

*Not Illustrated

TORO PART NUMBER INDEX (Continued)

Part No.	Description	Pg. No.	Ref. No.	Qty.
57–8460	Kit – Oil Pump Gasket	22	17	1
57–8470	Valve – Plunger, Bypass	22	4	1
57–8480	Pump – Oil	22	16	1
57–8530	Filter – Oil	22	6	1
57–8580	Baffle – Breather Tube	18	4	1
57–9090	Ring – Retaining	20	8	9
57–9100	Spring – Extension	30	16	1
57–9120	Bushing – Control Arm	30	10	1
57–9130	Hub – Governor Cup	20	9	1
57–9140	Arm – Governor Control	30	9	1
57–9150	Bracket – Cable	30	5	1
57–9170	Swivel – Choke Lever	29	8	1
57–9180	Link – Choke	29	3	1
57–9190	Clamp – Cable	30	3	1
57–9190	Clip – Choke Cable	29	12	1
57–9260	Gasket – Plate	25	29	1
57–9340	Plug – Spark	25	33	2
57–9350	Cable – Spark Plug 18”	25	*	1
57–9360	Bearing – Flanged Sleeve	19	*	1
57–9430	Regulator – Voltage	30	22	1
57–9550	Clamp – Hose	28	2	1
57–9550	Clamp – Vacuum Port	25	19	1
57–9570	Seal	25	7	1
57–9580	Seal	25	9	1
57–9590	Seal – Oil Crankshaft	18	17	1
57–9610	O–Ring – Oil Fill Cap	23	24	1
57–9630	Bearing – Ball	25	8	1
57–9640	Ball – Governor Fly	20	6	5
57–9650	Bearing – Governor Shaft	25	2	1
57–9660	Key – Camshaft Gear	20	3	1
57–9660	Key – Crankshaft Gear	20	24	1
57–9690	Plug – Expansion	18	7	1
57–9700	Clip – Retaining	27	3	1
57–9700	Clip – Retaining	30	23	1
57–9710	Ring – Retaining	20	20	1
57–9730	Clip – Retaining	30	24	1
57–9730	Clip – Retaining	25	26	1
57–9740	Washer – Flat, Copper	18	20	2
57–9750	Washer – Flat, Copper	22	10	2
57–9750	Washer – Flat, Copper	25	12	5
57–9760	Washer– Bypass Valve Flat	22	2	1
57–9770	Washer – Flat	31	11	2
57–9770	Washer – Flat	31	14	2
57–9800	Bearing – Flanged Sleeve	19	*	1
59–0010	Bearing – Flanged Sleeve	19	*	1
59–0020	Bearing – Crankshaft,	18	*	1
59–0030	Bearing – Crankshaft,	18	*	1
59–0040	Bearing – Crankshaft	18	*	1
59–0260	Tappet – Valve .005	19	*	4
59–0280	Spring – Bypass Valve	22	3	1
59–302–5	Screw – Hex. Hd.	30	7	1
59–0360	Tube – Vacuum Port	25	13	1
59–0370	Cap – Vacuum Port	25	20	1
59–0370	Cap – Fuel Outlet	28	1	1
59–0400	Pin – Camshaft	20	2	1
59–0420	Yoke – Governor Shaft	25	4	1
59–0430	Spring – Compression	30	8	1
59–0440	Governor Shaft & Arm	25	3	1
59–0450	Cup – Governor	20	7	1
59–0460	Lever – Choke	29	2	1
59–0470	Bracket – Choke Cable	29	4	1
59–0590	Terminal – Stator Leads	25	18	3
59–0640	Elbow – Street 45°	22	11	1
59–0720	Pin – Cotter	29	10	1
59–0730	Pin – Bearing Stop	18	18	4
59–0740	Pin – Dowel	25	6	1
59–0750	Pin – Gearcase Alignment	19	39	2
59–0790	Stud – Gear Cover	25	14	1
59–0810	Washer – Flat	20	13	1
59–0820	Washer – Flat	30	27	4
59–0830	Washer – Flat	30	11	4
59–0850	Washer – Flat	29	1	1
59–0880	Bolt	18	19	5
59–0950	Screw – Machine, Pan Hd.	25	5	2
59–0970	Screw – Hex. Hd.	25	40	1
59–0980	Screw – Hex Washer Hd.	30	15	2
59–1010	Screw – Hex. Hd.	30	6	2
59–1020	Screw – Shoulder	29	6	1
59–1080	Screw – Hex Washer Hd.	30	17	5
59–1100	Screw – Hex Flange Hd.	30	2	2
59–1120	Bolt	20	15	4
59–1130	Nut	25	16	1
59–1160	Bolt	22	1	1
59–1180	Capacitor	25	42	1
62–2710	Starter – Complete	31	*	1
62–2730	Kit – Bushing, Starter	31	8	1
62–2740	Kit – Brush, Starter	31	9	1
62–2760	Kit – Hardware, Starter	31	1	1
62–2770	Kit – Shift Lever	31	4	1
62–7770	Key	33	10	1
62–9130	Grip PTO & Brake Handle	13	22	2
71–5960	Filter – Fuel	28	5	1
71–5990	Cover – Ignition Plunger	25	30	1
71–6000	Coil	25	31	1
71–6010	Rotor – Ignition	25	32	1
71–6080	Bracket – Lifting	30	18	2
71–6100	Hose – Vacuum	28	7	1
71–6120	Hose	28	4	1
71–6140	Grommet – Rubber	26	34	1
71–6170	Seal	23	39	1
71–6190	Key – Flywheel	20	23	1
71–6220	Clamp – Wire	25	37	1
71–6340	Screw	20	14	6
71–6360	Gasket	25	10	1
71–6380	Control – Ignition	25	22	1
71–6410	Insulator – Ignition Module	25	44	1
71–6430	Nut – Hex Flange	25	39	1
71–6440	Nut – Hex Flange	25	36	1
71–6460	Screw – Hex Washer Hd.	25	41	2
72–3880	Screw – Washer Hd.	29	5	1
72–3890	Screw – Machine	29	9	1
72–3900	Screw – Hex. Hd.	30	4	1
72–3900	Screw – Washer Hd.	29	11	1
72–3930	Solenoid – Starter	31	5	1
72–3940	Kit – Clutch, Starter	31	3	1
74–0720	Tube – Manual	39	67	1
76–1340	Decal – Made in USA	37	16	1
78–0020	Hourmeter	33	6	1
78–3270	Tank – Fuel	17	32	2
78–3320	Bracket – Gauge Mounting	33	8	1
78–7560	Linkage Drive, Lower RH	9	3	1
78–7570	Linkage Drive, Lower LH	9	*	1
79–0560	Strap	9	40	2
79–1260	Block – Pivot	9	13	2
79–2710	Panel – Front	11	16	2
79–4210	Fork – Front Wheel	2	17	2

*Not Illustrated

TORO PART NUMBER INDEX (Continued)

Part No.	Description	Pg. No.	Ref. No.	Qty.
79–4800	Handle	17	26	1
79–5630	Fender – RH	11	6	1
79–6350	Knob	26	1	1
79–6440	Guard – Flywheel	20	16	1
82–0010	Decal – Air Cleaner	26	17	1
82–0020	Plate – Bearing,	18	15	1
82–0040	Nut	19	40	20
82–0070	Washer	19	48	2
82–0080	Insert – Exhaust Seat STD	18	24	2
82–0090	Insert – Exhaust Seat	18	*	2
82–0100	Insert – Exhaust Seat	18	*	2
82–0110	Insert – Exhaust Seat	18	*	2
82–0120	Insert – Exhaust Seat .025	18	*	2
82–0130	Gasket – Cylinder Head	18	9	2
82–0140	Guide – Exhaust Valve	19	26	2
82–0150	Guide – Intake Valve	19	*	2
82–0160	Insert – Intake Seat STD	19	25	2
82–0180	Insert – Intake Seat	19	*	2
82–0210	Cylinder Head	18	10	2
82–0220	Valve – Intake	18	22	2
82–0230	Valve – Exhaust	18	23	2
82–0240	Cap – Exhaust Valve	19	43	2
82–0250	Lock – Valve Spring	19	28	8
82–0260	Gasket – Valve Cover	18	6	2
82–0270	Seal – Intake Valve	18	8	2
82–0410	Bushing – Piston Ring	21	7	2
82–0420	Standard	21	*	4
82–0430	.002 Undersize	21	*	4
82–0440	.010 Undersize	21	*	4
82–0450	.020 Undersize	21	*	4
82–0460	.030 Undersize	21	*	4
82–0470	Rod – Connecting	21	4	2
82–0480	Tube – Oil Crankcase	18	21	1
82–0500	Adapter – Oil Filter	22	12	1
82–0510	Drain – Oil	22	8	1
82–0520	Gasket – Adapter	22	13	1
82–0530	Clamp – Breather Tube	19	32	1
82–0540	Tube – Breather	18	3	1
82–0550	Cap & Valve – Breather	18	2	1
82–0560	Screen – Breather Tube	19	33	2
82–0570	Seal – Breather	19	34	1
82–0590	Oil Fill Cap & Indicator	23	23	1
82–0610	Flywheel	20	18	1
82–0620	Guard	30	29	1
82–0650	Cover – Element	26	12	1
82–0660	Element – Air Cleaner	26	4	1
82–0670	Foam Element – Air Cleaner	26	3	1
82–0700	Tube – Air Intake	26	11	1
82–0720	Support – Air Cleaner	26	25	1
82–0850	Gasket – Carburetor	27	6	1
82–0860	Gasket – Manifold to Block	27	12	2
82–0870	Manifold – Intake	27	8	1
82–0920	Bracket – Ignition Coil	25	43	1
82–0980	Spacer	26	18	1
82–1000	Kit – Terminal Connector	25	21	1
82–1070	Connector – Hose	28	8	1
82–1080	Clamp – Wire	28	3	6
82–1090	Clamp – Breather Hose	26	33	2
82–1110	Hose – Fuel	28	6	1
82–1160	Key – Crankshaft Stub	20	25	1
82–1300	Washer – Flat	19	44	20
82–1310	Washer – Flat	27	7	4
82–1310	Washer – Flat	23	26	4
82–1310	Washer – Lock	19	42	5
82–1320	Washer – Flat	20	12	1
82–1340	Washer	27	11	2
82–1340	Washer – Lock	25	35	2
82–1340	Washer – Lock, Spring	22	15	2
82–1350	Washer – Flat	27	10	2
82–1360	Screw – Hex. Hd.	25	38	1
82–1370	Bolt	22	14	1
82–1380	Bolt	19	31	2
82–1470	Bolt – Rod Cap	21	5	4
82–1480	Screw – Round Hd.	18	11	1
82–1500	Screw – Machine, Hex. Hd.	25	23	3
82–1510	Screw – Hex. Hd.	22	7	2
82–1520	Gasket – Exhaust	17	7	2
82–1550	Screw – Hex Washer Hd.	26	7	2
82–1550	Spacer – Cover	26	9	1
82–1590	Screw – Pan Hd.	30	28	4
82–1600	Screw – Hex Washer Hd.	30	13	2
82–1630	Washer – Lock	20	26	4
82–1650	Washer – Lock	19	45	24
82–1660	Washer – Lock	25	25	2
82–1660	Washer – Lock	29	7	1
82–1690	Nut – Hex Washer Hd.	26	27	2
82–1730	Nut – Hex, Starter	31	6	1
83–3560	Tire – Front 13 x 5.00–6	35	9	2
88–2150	Seat – Back	39	38	1
88–2160	Seat – Bottom	39	39	1
88–2790	Decal – Danger	37	4	2
88–3250	Knob – Lumbar Control	39	42	2
88–3250	Nut – Lock	39	43	2
88–3300	Plate – Lumbar Friction	39	48	2
88–3310	Support – Back, LH	39	52	1
88–6530	Tire – Knobby, Rear	35	*	2
92–0913	Nut – Wing	26	13	1
92–0915	Screw – Machine, Hex. Hd.	26	8	3
92–0924	Block – Short 24 HP.	18	1	1
92–0925	Insert – Intake Seat	19	*	2
92–0926	Insert – Intake Seat	19	*	2
92–0927	Insert – Intake Seat	19	*	2
92–0928	Stud – Cylinder Hd.	19	36	8
92–0929	Stud – Cylinder Hd.	19	*	4
92–0932	Stud – Cylinder Hd.	19	*	8
92–0933	Ring – Retaining	21	3	4
92–0934	.005 Oversize	21	*	2
92–0935	.010 Oversize	21	*	2
92–0936	.020 Oversize	21	*	2
92–0937	.030 Oversize	21	*	2
92–0938	Pin – Piston	21	2	2
92–0939	Set – Piston Ring (Std)	21	6	2
92–0940	.005 Oversize	21	*	2
92–0941	Gear – Crankshaft	20	22	1
92–0942	Base – Oil	23	19	1
92–0943	Plug – Drain	23	22	1
92–0944	Cup – Oil Pump Intake	23	18	1
92–0945	Tube – Crankcase Breather	26	14	1
92–0946	Plate – Air Deflector	26	10	1
92–0947	Tube – Oil Fill Spec.	23	38	1
92–0948	Housing – Blower	30	1	1
92–0949	Housing – Air L.H.	30	14	1
92–0950	Housing – Air R.H.	30	20	1
92–0960	Harness – Wire	25	48	1
92–0967	Stator with Terminals	25	17	1
92–1714	Bushing – Front Bearing	2	15	4

*Not Illustrated

TORO PART NUMBER INDEX (Continued)

Part No.	Description	Pg. No.	Ref. No.	Qty.
92–1715	Spacer – Front Wheel	35	6	4
92–1759	Frame w/Bumper	2	11	1
92–1799	Fan – LH, Clockwise	4	13	1
92–2369	Decal – Temperature Alarm	37	13	1
92–2500	Decal – Danger	37	3	2
92–2501	Decal – Speed Control	37	8	1
92–2502	Decal – Parking Brake	37	6	1
92–2503	Decal – Steering/Throttle	37	9	1
92–2504	Decal – Danger	37	2	1
92–2505	Decal – Zero Turn RH	37	10	1
92–2506	Decal – Zero Turn LH	37	14	1
92–2509	Decal – Proline 724–Z	37	15	1
92–4075	Bracket – Seat Mounting	39	2	1
92–4845	Hub – Rear Wheel	2	27	2
92–6519	Grip Handle – Control	9	1	2
92–9804	Standard	21	*	2
92–9810	Harness – Wiring	33	7	1
92–9810	Wire Harness	34	*	1
92–9811	Switch – PTO	33	20	1
93–3160	Electric Clutch – Complete	36	1	1
93–3176	Rotor & Armature Asm	36	2	1
93–3226	Mat – Footrest	11	15	1
94–1814	Engine – 24 HP Toro Power	17	11	1
94–1840	Cover – Air Cleaner	26	2	1
94–1843	Kit – Float & Gasket	27	+	1
94–1844	Kit – Accelerator	27	+	1
94–6049	Kit – Carburetor	27	1	1
94–6400	Kit – Main Jet, Fixed	27	+	1
94–6401	Switch – Oil Pressure	22	36	1
94–6402	Harness – Wiring, Engine	33	23	1
242–50	Nut – Lug	2	2	8
2412–98	Clamp – Hose	17	37	5
2412–120	Clamp – Tube	39	68	2
282–2	Yoke – Threaded	9	20	2
283–6	Pin – Clevis	13	11	2
283–61	Pin – Clevis	9	26	2
288–4	Cap	17	30	1
289–45	Nipple	17	28	1
2811–10	Elbow	17	29	1
302–2	Fitting – Grease	3	13	4
302–5	Fitting – Grease	35	11	2
302–5	Fitting – Grease	2	22	4
302–5	Fitting – Grease	9	27	2
321–2	Screw	17	19	2
321–3	Bolt	13	8	1
321–3	Bolt	11	3	10
321–4	Bolt	33	26	2
321–4	Bolt	33	37	1
321–4	Bolt	39	59	2
321–4	Bolt	11	8	2
322–3	Bolt	17	5	1
322–3	Bolt	3	21	2
322–3	Bolt	9	39	1
322–3	Screw	33	51	1
322–5	Bolt	3	18	4
322–5	Bolt	15	13	2
322–9	Bolt	15	12	2
322–22	Screw – Hex. Hd.	31	12	2
322–41	Bolt	11	19	2
322–41	Screw – Machine, Hex. Hd.	3	33	2
323–4	Bolt	39	64	8
323–4	Bolt	36	12	2
323–4	Bolt	39	46	2
323–6	Bolt	4	9	4
323–6	Bolt	3	24	4
323–6	Bolt	17	27	2
323–6	Bolt – Hex	3	31	5
323–7	Bolt	4	14	2
323–7	Bolt	15	26	8
323–7	Bolt	2	4	12
323–7	Bolt	13	7	2
323–7	Bolt	9	17	2
323–8	Bolt	3	7	8
323–10	Bolt	2	6	2
323–14	Bolt	4	3	8
323–14	Screw – Hex. Hd.	27	5	4
323–25	Screw	23	21	4
325–5	Bolt	39	44	4
327–4	Bolt – Idler Sprocket	3	2	2
327–15	Bolt	2	18	2
3211–5	Bolt	33	40	3
3217–5	Nut	9	11	8
3217–6	Nut	3	20	2
3217–6	Nut	11	18	4
3217–27	Nut – Keps	33	17	1
3217–30	Nut	2	20	2
3218–5	Nut – Jam	9	21	4
3219–2	Nut	13	13	2
3219–2	Nut – Hex	9	19	2
3231–4	Bolt – Carriage	39	45	2
3234–18	Bolt	17	6	4
3245–32	Screw – Set	3	12	4
3245–32	Setscrew	13	10	2
3247–3	Screw – Set	4	7	2
3247–4	Screw	19	41	2
3248–6	Screw – Set Sq	4	4	8
3253–2	Washer – Lock	25	15	3
3253–3	Washer – Lock	17	20	2
3253–3	Washer – Lock	33	39	1
3253–3	Washer – Lock	33	29	2
3253–4	Washer – Lock	17	8	8
3253–8	Washer – Lock	2	19	2
3253–21	Washer – Lock	3	30	4
3253–21	Washer – Lock	3	8	4
3253–23	Washer – Flat	15	23	8
3256–2	Washer	39	57	8
3256–2	Washer	11	10	11
3256–4	Washer	2	7	2
3256–4	Washer	4	8	18
3256–4	Washer – Flat	3	9	8
3256–21	Washer – Lock	15	25	8
3256–21	Washer – Lock	39	65	8
3256–22	Washer	33	27	2
3256–22	Washer	33	38	1
3256–22	Washer – Flat	11	2	10
3256–23	Washer	9	4	6
3256–23	Washer – Flat	17	3	1
3256–23	Washer – Flat	13	18	2
3256–23	Washer – Flat	3	23	1
3256–24	Washer	13	3	1
3256–24	Washer	17	23	1
3256–24	Washer	36	13	2
3256–24	Washer	3	25	2
3256–24	Washer – Flat	9	8	2
3256–24	Washer – Flat	39	66	4
3256–26	Washer – Special	9	24	4

*Not Illustrated

TORO PART NUMBER INDEX (Continued)

Part No.	Description	Pg. No.	Ref. No.	Qty.
3256–27	Washer	3	32	6
3256–68	Washer – Fender	11	13	4
3272–6	Pin – Cotter	13	19	2
3272–6	Pin – Cotter	13	14	2
3272–7	Pin – Cotter	9	7	6
3272–7	Pin – Cotter	39	62	2
3272–19	Pin – Cotter	15	10	2
3274–22	Bolt	17	9	8
3290–134	Screw	17	16	1
3290–134	Screw	33	49	2
3290–378	Straps – Tie	17	35	4
3290–378	Tie – Cable	2	*	1
3290–378	Tie –Cable	9	*	4
3296–2	Nut	17	18	1
3296–2	Nut	33	50	3
3296–23	Nut	9	22	2
3296–23	Nut	9	36	1
3296–29	Nut	17	2	1
3296–29	Nut	15	11	2
3296–29	Nut	3	15	3
3296–29	Nut	9	38	1
3296–29	Nut – Lock	33	52	1
3296–39	Nut	4	2	14
3296–39	Nut	2	5	2
3296–39	Nut	2	3	12
3296–39	Nut	9	9	4
3296–39	Nut	3	26	4
3296–42	Nut	11	4	10
3296–42	Nut	39	58	2
3296–65	Nut	33	45	1
32103–22	Nut Wing	33	28	2
32105–2	Screw	33	53	1
32121–114	Pin – Spirol	13	17	1
32144–1	Screw	4	20	8
32144–1	Screw	39	69	2
32144–4	Bolt	2	24	3
32144–4	Bolt	39	34	5
32144–4	Bolt	11	9	11
32149–7	Nut	33	48	2
32151–91	Ring – Retaining	2	12	2

*Not Illustrated

3317–835

In an effort to make improvements available to TORO owners as quickly as possible, minor changes are incorporated into Toro's products from time to time that do not become immediately shown in the Parts Catalog. If such a change has been made in your unit, which is not reflected in your manual, see your TORO Distributor or his Authorized TORO Service Dealer for information and part numbers.

IDENTIFICATION AND ORDERING

MODEL AND SERIAL NUMBERS

The 724Z's two identification numbers; a model number and a serial number. The two numbers are stamped on a plate which is located on the main frame under the seat. In any correspondence concerning the ,Product, supply model and serial numbers to assure that correct information and replacement parts are obtained.

To order replacement parts from an Authorized TORO Service Dealer, supply the following information:
1. Model and serial number.
2. Part number, description, and the quantity of part(s) desired.

NOTE: Do not order by reference number if a parts catalog is being used; use the PART NUMBER.

TABLE OF CONTENTS

Description	Page
Frame, Rear Hub And Front Wheel Fork	2
Transmission Drive Frame	3
Transmission Drive	4
Peerless Gearbox Assembly	5
Hydrostatic Transmission	6
Transmission Drive Linkage	8
Fender And Covers	10
Parking Brake	12
Attachment Height Control	14
Engine And Fuel System	16
Engine Cylinder Block	18
Crankshaft, Camshaft, And Flywheel	20
Piston And Rod	21
Oil Pump, & Filter	22
Oil Pan, Filler Tube	23
Gearcase And Ignition Controls	24
Air Cleaner	26
Carburetor, Intake Manifold	27
Fuel Pump	28
Choke Linkage	29
Blower Housing Assembly	30
Starter	31
Electrical Systems	32
Electrical Schematic	34
Wheel And Tires	35
P.T.O. Electric Clutch	36
Decals	37
Seat	38
Numeric Index	40

Optional Equipment

Description	Part /Model No.
50" Side Discharge Mower	78445
60" Side Discharge Mower	78475
8 cu. ft. Canister Vac (50"Mower*)	79430
8 cu. ft. Canister Vac (60"Mower*)	79431
Knobby Tire Assembly	111920
Drawbar	112951
Front Weight Kit	81127

* Require Front Weight Kit # 81127

MAINTENANCE RECORD

Date								

MAINTENANCE RECORD

Date								