Form No. 3372-342 Rev B

TORO®

Count on it.

Parts Catalog

41cm Recycler® Lawn Mower

Model No. 21032—Serial No. 312000001 and Up

CE

Register at www.Toro.com.

Original Instructions (EN)

Ordering Replacement Parts

To order replacement parts, please supply the part number, the quantity, and the description of each part desired.

Understanding Reference Numbers

Each identified part in an illustration has a reference number. The reference number for a part also appears in the parts list, along with other information about the part.

This catalog uses two special reference number formats, one to indicate parts in a service assembly and another to indicate the quantity of a given part in an illustration.

Service Assembly Reference Numbers

Parts in service assemblies have reference numbers in the form a:b. The a represents the reference number of the entire service assembly and the b represents a sequential number unique to each part within the service assembly.

For example, a wheel assembly might be identified by reference number 6, the tire by 6:1, the valve by 6:2, and the wheel by 6:3. When you order the assembly identified by reference number 6, you receive all parts identified by reference numbers 6:1,6:2, and 6:3. However, you may also order any part individually. Reference numbers of this type appear in illustration and in parts lists.

Reference Numbers Indicating Quantity

In an illustration, if a reference number indicates more than one part, the reference number has the form nX y. The n represents the quantity of the part, the X is the multiplication symbol, and the y represents the reference number.

For example, in an illustration, the reference number 2X 37 means that two of the parts identified by reference number 37 are indicated.

List of Abbreviations

AR: as required

ASM: assembly

BBC: blade brake control

BHTF: button head thread forming

CARR: carriage

CCW: counter clockwise

CW: clockwise

DEG: degrees

DPA: Dual Point Adjustment

ECM: electronic control module

EXT: external

FH: flat head

GA: gauge

HD: heavy-duty

HF: hex flange

HH: hex head

HHF: hex head flange

HHFTF: hex head flange thread forming

HJ: hex jam

HLH: hex lag head

HOC: height-of-cut

HSBH: hex socket button head

HSFH: hex socket flat head

HSH: hex socket head

HWH: hex washer head

HWHTF: hex washer head thread forming

HYD: hydraulic

LH: left hand

LP: Liquid Propane

NI: nylon insert

NPTF: national pipe thread fine

PFH: phillips flat head

PPH: phillips pan head

PPHTF: phillips pan head thread forming

PRH: phillips round head

PTH: phillips truss head

PTO: power-take-off

RH: right hand

ROPS: roll-over protection system

RRB: rear roller brush

SFH: slotted fillister head

SHH: slotted hex head

SHWH: slotted hex washer head

SPH: slotted pan head

SQH: square head

SRH: slotted round head

STD: standard

TAP: self tapping

TTH: torx truss head

Contents

Upper Assembly 4
Lower Assembly 6

© 2012—The Toro® Company
8111 Lyndale Avenue South
Bloomington, MN 55420

Contact us at www.Toro.com.
Printed in the USA.
All Rights Reserved

Upper Assembly

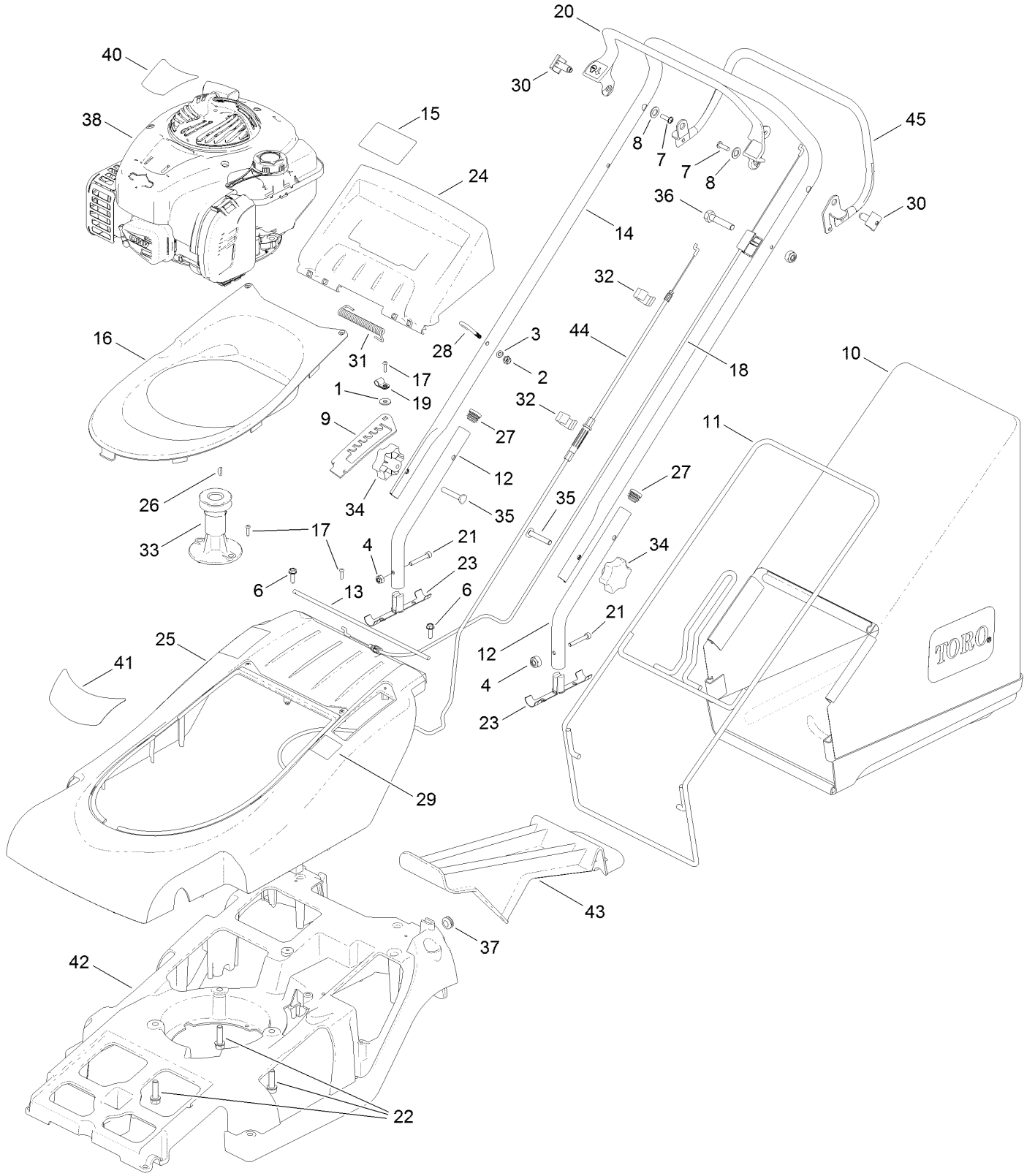

Upper Assembly (continued)

Ref.	Part Number	Qty.	Description
1	09262	1	Washer
2	09438	1	Nut-Nyloc
3	09472	1	Washer-Plain
4	09544	2	Nut-Nyloc
6	09575	2	Screw-Taptite
7	09687	2	Screw
8	09688	6	Washer-Nylon
9	111-0040	1	Plate-HOC
10	111-4025	1	Grassbag
11	111-0045	1	Frame-Grassbag
12	111-0051	2	Handlebars-Lower
13	111-0056	1	Bar-Hinge
14	111-0079	1	Handlebars
15	111-0083	1	Decal-Safety
16	111-0089	1	Moulding-Trim
17	111-0094	3	Screw
18	111-0096	1	Cable-Brake, Engine
19	111-0098	1	Clip-P
20	111-0102	1	Bailarm
21	111-0118	2	Screw-Socket
22	111-0805	3	Screw-Taptite
23	111-0960	2	Plug-Handlebar
24	111-1043	1	Moulding-Deflector, Rear
25	111-3978	1	Top-Cover
26	1662	1	Key-Woodruff
27	300160	2	Plug-Tube
28	305093	1	Guide-Rope
29	320006	1	Decal-HOC
30	340182	2	Pin-Pivot
31	410030	1	Spring-Deflector
32	410037	2	Guide-Cable
33	410078	1	Carrier-Blade
34	480088	2	Knob-Handlebar
35	HY226024	2	Bolt-Handlebar
36	ZBH1F040U	1	Screw-HH
37	111-2155	1	Grommet-Rubber
38		1	Engine-Briggs, 09P7020022H1 ●■
40	111-5433	1	Decal-Engine
41	111-5432	1	Decal-Recycle
42	111-0031	1	Chassis
43	111-4382	1	Plug-Mulching
44	111-5481	1	Cable-Clutch, Auto-Drive
45	306094W	1	Lever-Clutch

● Not serviced separately

■ Obtain parts from www.briggsandstratton.com

Lower Assembly

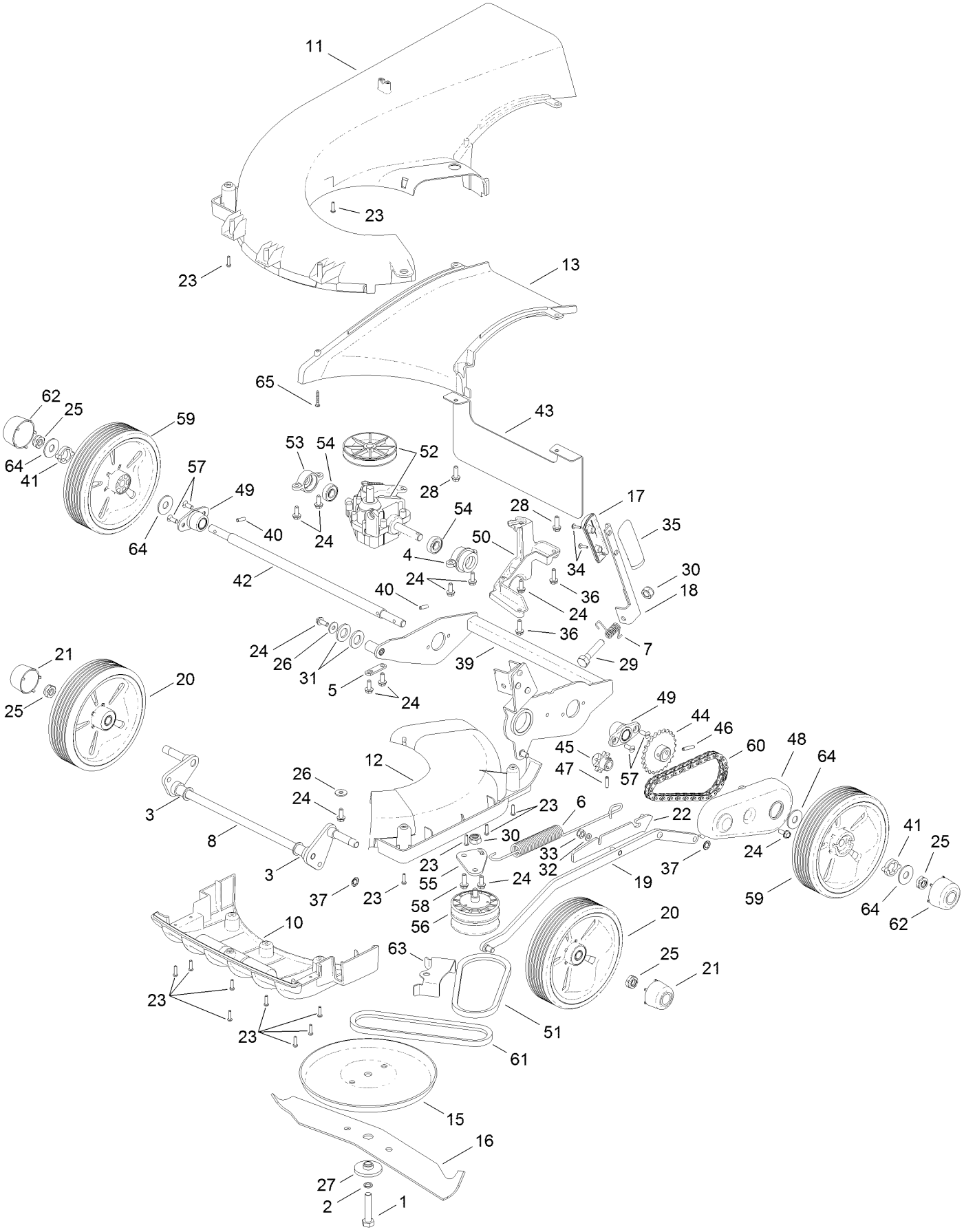

Lower Assembly (continued)

Ref.	Part Number	Qty.	Description
1	09788	1	Bolt-Unf
2	09273	1	Washer-Spring
3	410069	2	Bearing-Axle, Front
4	410048	1	Housing-Pivot Bearing, LH
5	219037	1	Plate-Securing
6	410050	1	Spring-Counter Balance
7	111-0078	1	Spring-HOC
8	111-0027	1	Axle-Front
10	111-0034	1	Moulding-Fin
11	111-0037	1	Moulding-Snail Deck
12	111-0038	1	Moulding-Access, Snail Deck
13	111-0039	1	Moulding-Throw Plate
15	410057W	1	Disc-Friction
16	111-0093	1	Cutterbar
17	111-0055	1	Knob-HOC, RH
18	111-0059	1	Lever-HOC
19	111-0063	1	Rod-Connecting Bar
20	111-4036	2	Wheel ASM
21	111-0066	2	Cap-Wheel, Centre
22	111-0073	1	Mount-Spring
23	111-0094	14	Screw
24	09365	11	Screw-Taptite
25	111-0119	4	Nut-Nyloc
26	09262	2	Washer
27	HY4014	1	Spacer-Distance, Cutterbar
28	09575	2	Screw-Taptite
29	09565	1	Screw-HH
30	09441	2	Nut-Nyloc
31	09491	2	Washer-Plain
32	09476	1	Washer-Shakeproof
33	09438	1	Nut-Nyloc
34	HY100078	2	Screw
35	111-0105	1	Knob-HOC, LH
36	09364	2	Screw-HH
37	0201086	2	Washer-Starlock
39	111-3981	1	Frame-Rear Wheel
40	111-3866	2	Key-Drive
41	111-3865	2	Cam-Drive
42	111-3862	1	Axle-Rear
43	111-5304	1	Guard-Rear
44	111-5479	1	Sprocket-24T
45	111-0123	1	Sprocket-Gearbox, 10T
46	HY03354	1	Pin-Spring, Selloc
47	03997	1	Pin-Roll
48	111-4911	1	Cover-Drive
49	219102	2	Housing-Bearing, Roller
50	111-5008	1	Mount-Bearing
51	111-5115	1	Belt-Variator
52	111-5511	1	Gearbox ASM
53	410047	1	Housing-Gearbox, Bearing (RH)
54	411027	2	Bearing
55	111-0104	1	Bracket-Belt
56	411001	1	Pulley Variator ASM
57	09545	4	Screw-Taptite
58	09787	1	Screw-Taptite
59	111-5440	2	Wheel Assembly (Drive, Grey)
60	111-5518	1	Chain-43 Links
61	111-0771	1	Belt-Variator (536)
62	111-5466	1	Cap-Drive Wheel
63	111-5395	1	Guard-Belt
64	111-4957	4	Washer-Thrust
65	111-0100	1	Screw

Count on it.