Parts Manual for

SNAPPER®

YARD TRACTORS ELECTRIC CLUTCH HYDRO DRIVE RMO ACS YT400 Series

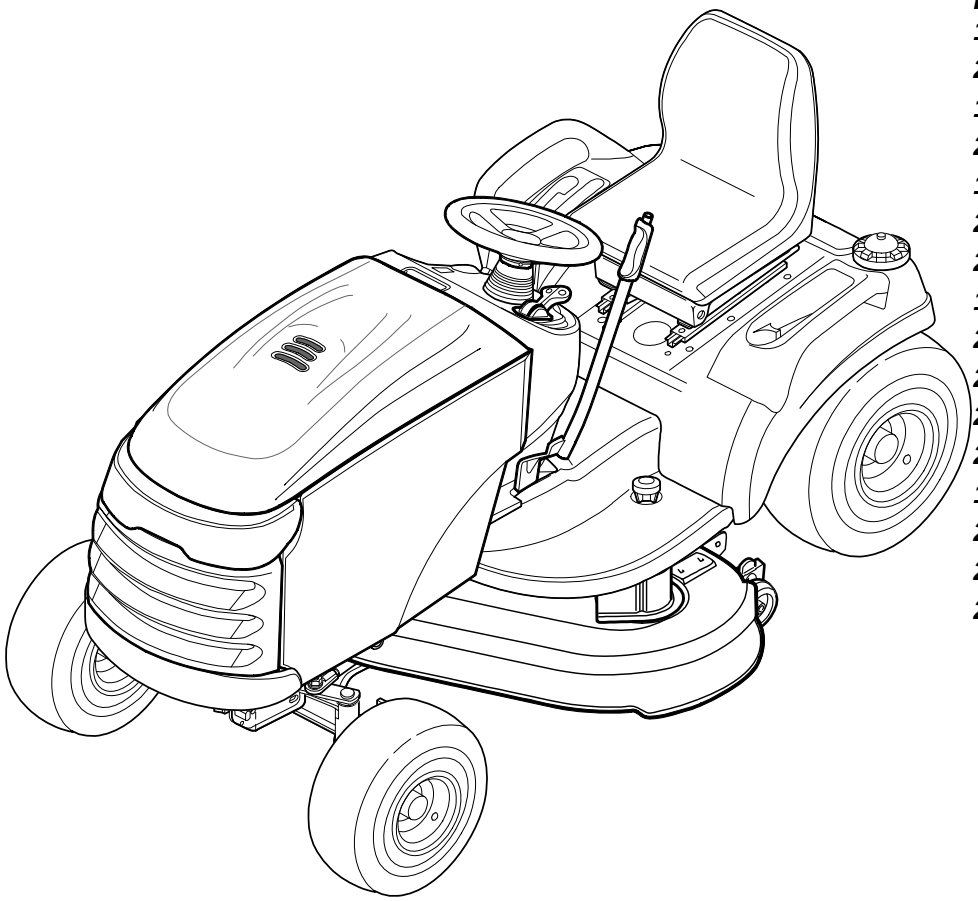

Model No.	Description
1694679	YT2044
2690268	YT2044
1694907	YT2144
2690457	YT21440
1694627	YT2250
2690269	YT22500
2690503	YT2300
1694812	YT2344
2690403	YT2344
2690505	YT2344
2690657	YT2344
2690754	YT2344
1694817	YT2350
2690806	YT2350
2690411	YT23500
2690752	YT23500

Briggs & Stratton Yard Power Products Group
535 Macon Road
McDonough, GA, 30253 U.S.A.
800-935-2967

Manual No. 7006471
Revision: C 7/8/2009

PAGE	GROUP
4	Wheels & Tires Group
6	Hood, Grille & Dash Group
8	Seat & Seat Deck Group
10	Steering Group - Manual Steering
12	Frame Group - Manual Steering
16	Frame & Front Axle Group
20	Controls Group
24	Cruise Control Group
26	Transmission Group
30	TRANSMISSION SERVICE PARTS - Tuff Torq K-66L
36	Engine Group - 20HP, 22HP & 23HP Briggs & Stratton, Vanguard Twin
40	Decals Group
42	Lift Group - Manual Lift
44	44" Mower Deck - Belt, Idler Arm & Hitch
46	44" Mower Deck - Height Adjustment
50	44" Mower Deck - Height Adjustment
54	44" Mower Deck - Housing, Arbors & Blades
58	44" Mower Deck - Housing, Arbors & Blades
62	50" Mower Deck - Clutch & Support Group
64	50" Mower Deck - Clutch & Support Group
66	50" Mower Deck - Housing, Arbors & Blades
70	50" Mower Deck - Housing, Arbors & Blades
74	50" Mower Deck - Height Adjust Group
78	50" Mower Deck - Height Adjust Group
82	Electrical Group

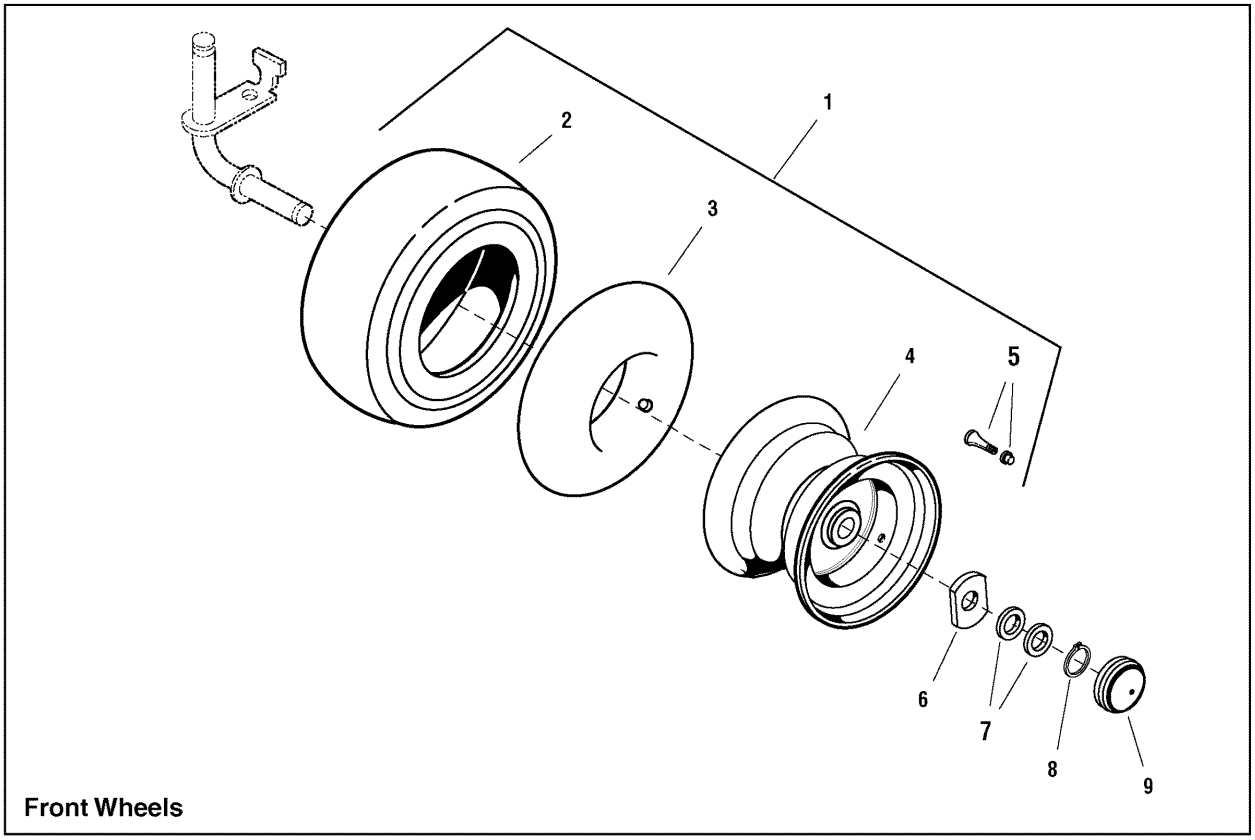

Front Wheels

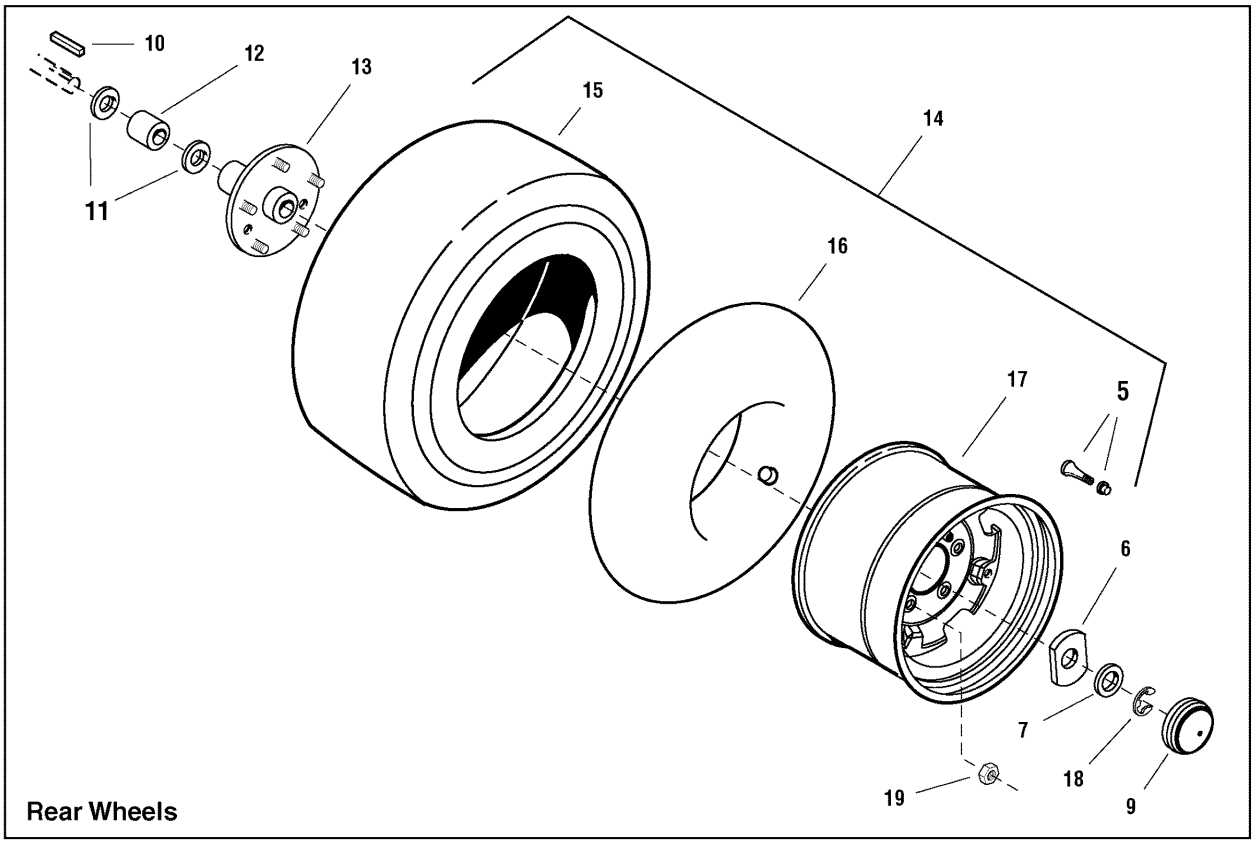

Rear Wheels

Wheels & Tires Group

Item	Part No	Qty	Description
1	1722305	2	WHEEL & TIRE ASSEMBLY, Front (Includes Ref. Nos. 2, 3, 4 & 5)
2	1722833	2	TIRE, 16 x 6-1/2 - 8 Super Turf, Front
3	2164247	2	TUBE, Tire 16 x 6-1/2 - 8, Front
4	1722834	2	WHEEL, 5 3/8 x 7-15/16, Front
5	2172353	4	VALVE STEM & CAP ASSEMBLY
6	1722726	4	WASHER, Special, 1 x 2-1/2
7	1919394	6	WASHER
8	2832577	2	RING, Shaft
9	1722676	4	CAP, Hub Grey, 2-23/64
10	2105337	2	KEY, HI PRO, 1/4 x 2
11	2860200	4	WASHER
12	1723112	2	SPACER, 1-1/16 x 1-1/2 x 1-23/32, Black
13	1721400	2	PLATE & HUB ASSEMBLY, Rear Wheel w/Studs
14	1722766	2	WHEEL & TIRE ASSEMBLY, Rear 23" (Includes Ref. Nos. 5, 15, 16 & 17)
15	1722830	2	TIRE, 23 x 10-1/2 - 12 Super Turf, Rear
16	2157638	2	TUBE, Tire 23 x 10-1/2 - 12, Rear
17	1722831	2	WHEEL, 7 x 12, Rear
18	2834712	2	RING, Shaft
19	2177725	10	NUT, Hex 7/16-20, For Wheel Bolt

Footnotes:

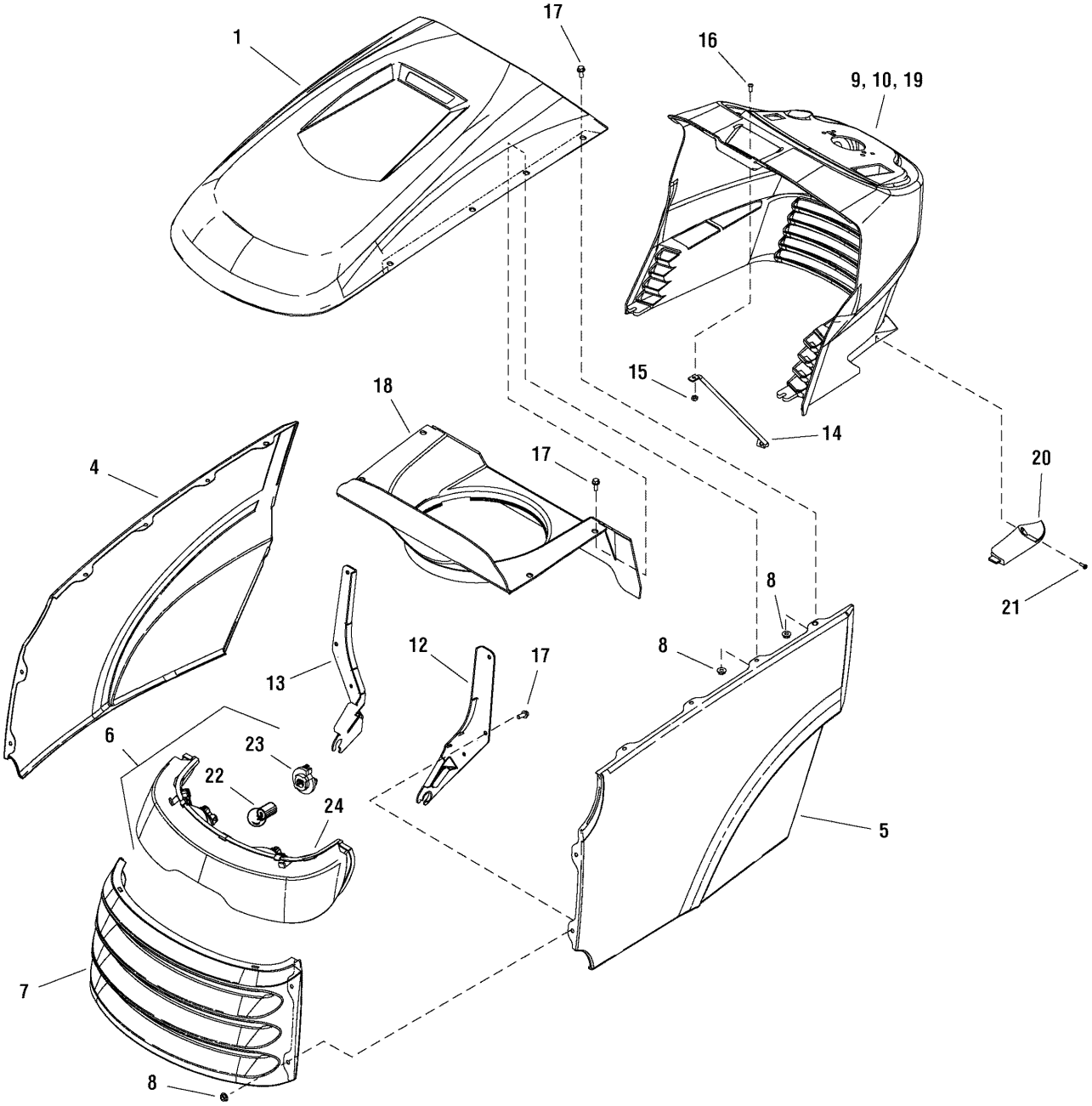
1
17
16
9, 10, 19
15
14
18
17
20
4
21
8
8
12
17
13
6
23
22
24
5
7
8

Hood, Grille & Dash Group

Item	Part No	Qty	Description
1	1728031D	1	HOOD, W/Scoop
4	1721804D	1	PANEL, R.H. Side
5	1721803D	1	PANEL, L.H. Side
6	1721810	1	HEADLIGHT ASSEMBLY (Includes Ref. Nos. 22, 23 & 24)
7	1721802D	1	GRILLE
8	1930641	12	NUT, Hex Flange 1/4-20 Whiz Lock
9	1726827	1	DASHBOARD (Used only on YT & LT models)
10	1726894	1	DASHBOARD, W/Hydraulic Lift Slot (Used only on GT models)
12	1721808A	1	HINGE, Hood L.H.
13	1721809A	1	HINGE, Hood R.H.
14	1723123	1	ROD, Dash Support
15	1933896	1	NUT, Hex Lock 10-24 w/Nylon Insert
16	1960392	1	SCREW, Pan Head Phillips #10-24 x 1
17	1960295	12	SCREW, Hex Whiz Lock Flange 1/4-20 x 5/8
18	1733457A	1	DUCT, Air Inlet
19	1726895	1	DASHBOARD, w/Buzzer Hole (Used only on Barons models)
20	1722285	1	COVER, Dash (Used only on Barons models)
21	1722607	1	SCREW, Pan Head Torx #8-16 x 1/2 Plastite (Used only on Barons models)
22	1677371	4	BULB, Headlight
23	1723451	4	SOCKET ASSEMBLY, Seal
24	1722902	1	REFLECTOR, Headlight

Footnotes:

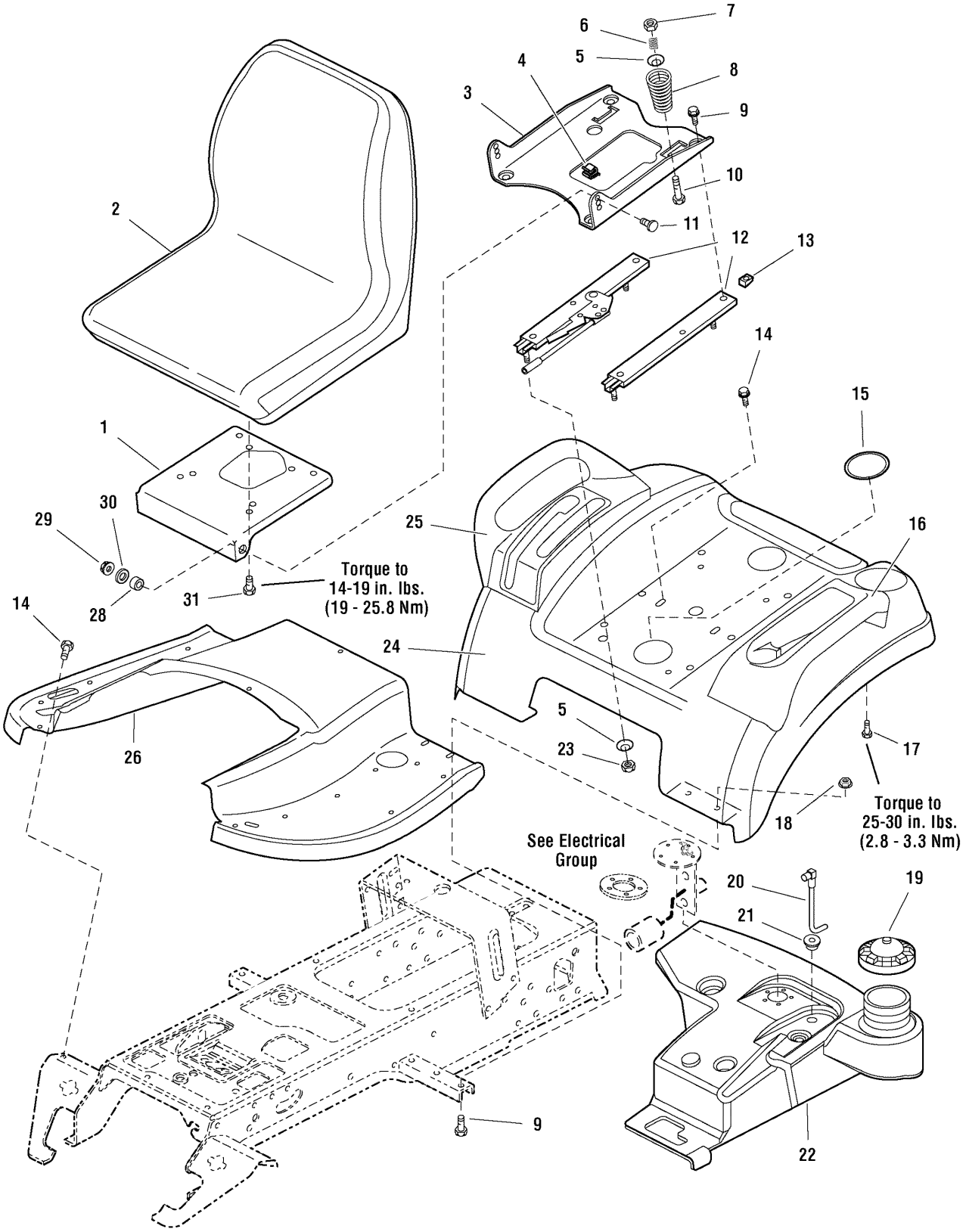
7
6
5
4
8
3
9
10
2
11
12
13
14
15
1
30
29
25
16
Torque to
14-19 in. lbs.
(19 - 25.8 Nm)
31
28
14
24
5
23
17
26
18
Torque to
25-30 in. lbs.
(2.8 - 3.3 Nm)
See Electrical
Group
20
19
21
9
22

Seat & Seat Deck Group

Item	Part No	Qty	Description
1	1722129A	1	BRACKET, 1-5/8 x 1-3/4
2	1722307	1	SEAT, 18” Back
3	1722128A	1	SUPPORT, Seat
4	2172434	1	CLIP, Wire
5	1709256A	2	WASHER, Spring, 5/16 x 1-1/4
6	1714263	2	SPRING, Compression
7	1919438	10	NUT, Hex Lock, ESNA Light, 5/16-18
8	1717051	2	SPRING, Compression
9	1930591	8	CAPSCREW, Hex Flange Whiz Lock, 5/16-18 x 3/4
10	1931339	2	CARRIAGE BOLT, 5/16-18 x 2
11	1931350	2	CARRIAGE BOLT, 3/8-16 x 1
12	1722356	1	SLIDE, Seat
13	1935255	4	NUT, Speed, 5/16-18, Lug Type
14	1930601	4	CAPSCREW, Hex Washer Head Taptite, 5/16-18 x 5/8
15	1722309	2	PLUG, Plastic
16	1722109	1	POD, with Cup Holder, LH
17	2960664	8	CAPSCREW, Hex Washer Head, 1/4-20 x 5/8
18	1931277	4	NUT, Hex Flange Whiz Lock, 5/16-18
19	1715917	1	CAP, Gas
20	1722340	1	TUBE & ELBOW ASSEMBLY
21	1654930	1	BUSHING, 3/8 x 9/16 x 5/8, Rubber
22	1722432	1	TANK, Fuel
23	1960636	8	NUT, Hex KEPS, 5/16-18
24	1722106D	1	DECK, Seat, Red
25	1722108	1	POD, RH with 2 Slots
26	1722105D	1	TUNNEL, Red
	1960667	4	SCREW, Hex Flange Whiz Lock, 5/16-18 x 1 (Not shown)
28	1663752	2	SPACER, 25/64 x 5/8 x 3/16, Hardened
29	1930645	2	NUT, Hex Flange Two-Way Lock, 3/8-16
30	1924940	2	WASHER, 3/8
31	1960667	4	CAPSCREW, Hex Flange Whiz Lock Dog Point, 5/16-18 x 1

Footnotes:

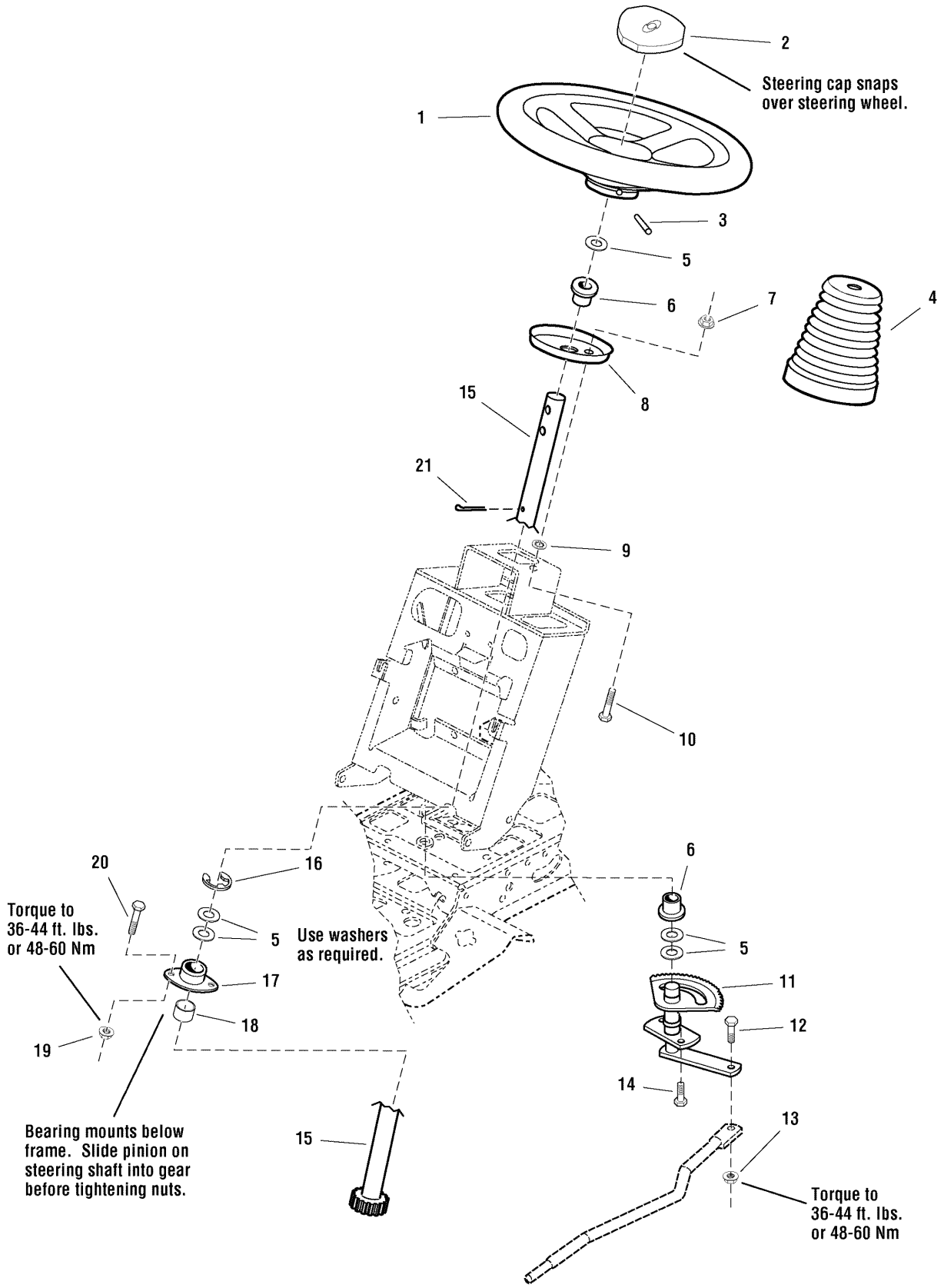
2
Steering cap snaps over steering wheel.
1
3
5
6
7
4
8
15
21
9
10
20
16
6
Torque to 36-44 ft. lbs. or 48-60 Nm
5
Use washers as required.
5
17
11
18
12
19
14
Bearing mounts below frame. Slide pinion on steering shaft into gear before tightening nuts.
15
13
Torque to 36-44 ft. lbs. or 48-60 Nm

Steering Group - Manual Steering

Item	Part No	Qty	Description
1	1722318	1	STEERING WHEEL, Straight, Shaft
2	1725024	1	CAP, Steering Wheel, Plain
3	1960540	1	PIN, Spring, 5/16 x 2-1/2
4	1722749	1	COVER, Rubber, Upper Steering Shaft
5	1960114	5	WASHER, 3/4
6	2176440	2	BUSHING, 15/32 x 7/8 x 7/8, Nylon
7	2828372	2	NUT, Hex KEPS 1/4-20
8	1721736A	1	PLATE, Mounting Steering
9	1960518	2	NUT, Push
10	1960655	2	CARRIAGE BOLT, 1/4-20 x 1-1/4
11	1722385	1	GEAR & SHAFT ASSEMBLY, Steering
12	1960032	1	CAPSCREW, Hex Head, 3/8-16 x 1-1/4, Black
13	1930645	1	NUT, Hex Flange Two-Way Lock, 3/8-16
14	1664847	2	CAPSCREW, Hex Washer Head Taptite, 5/16-18 x 3/4
15	1721626	1	SHAFT & PINION ASSEMBLY, Steering Manual
16	1611710	1	RING, Clipring Extension
17	1722459	1	BEARING, 3/4 x 1-11/16 x 13/16, 3” Long Housing
18	1722461	1	SPACER, 3/4 x 1-1/16 x 3/8, Powder Metal
19	1931211	2	NUT, Hex Flange Whiz Lock, 3/8-16, Small
20	1933260	2	CAPSCREW, Hex Whiz Lock Flange, 3/8-16 x 3/4, Black
21	1960033	1	PIN, Cotter, 1-1/4, Black

Footnotes:

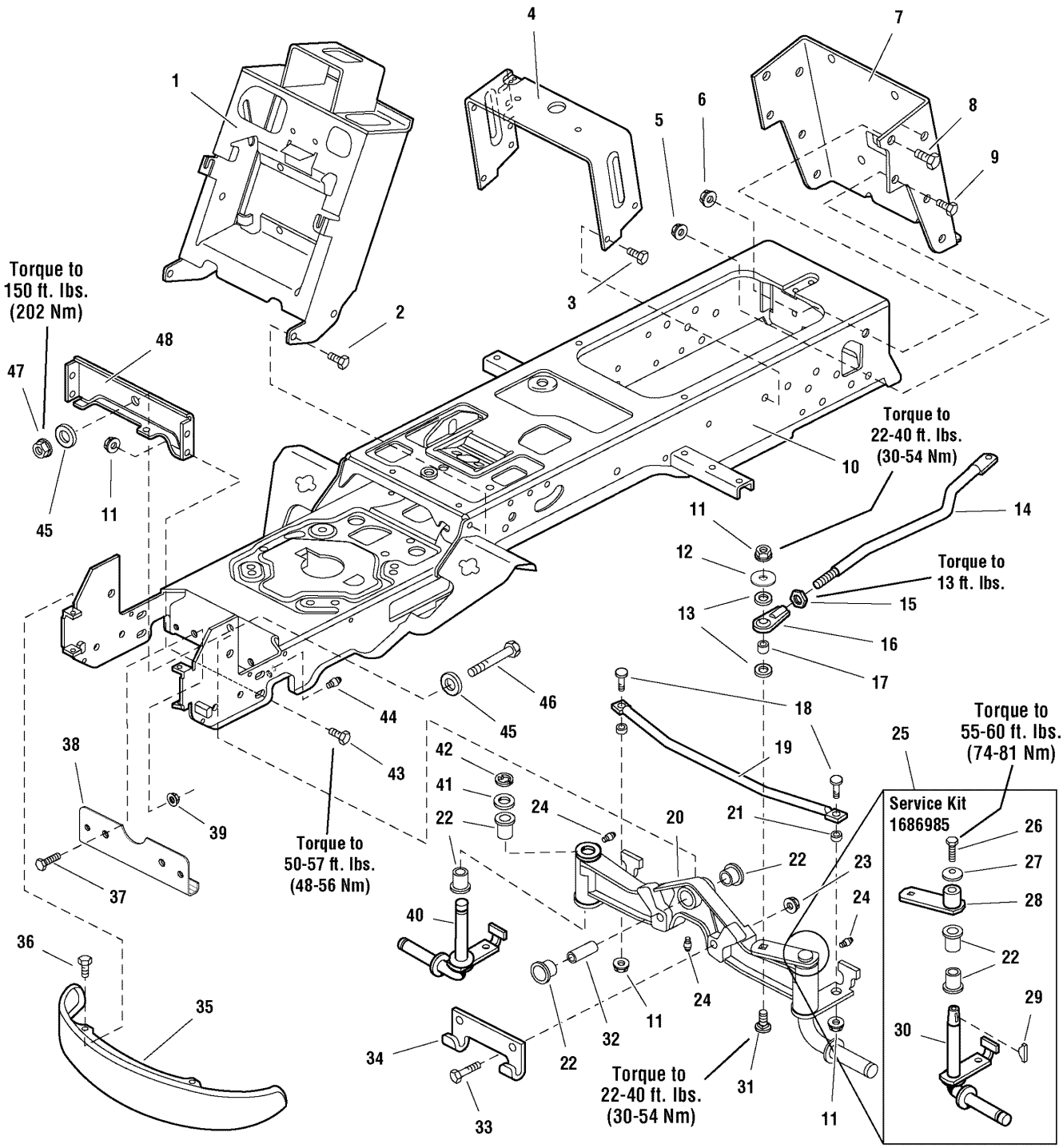
Torque to
150 ft. lbs.
(202 Nm)
Torque to
22-40 ft. lbs.
(30-54 Nm)
Torque to
13 ft. lbs.
Torque to
55-60 ft. lbs.
(74-81 Nm)
Torque to
50-57 ft. lbs.
(48-56 Nm)
Torque to
22-40 ft. lbs.
(30-54 Nm)
Service Kit
1686985
1
2
3
4
5
6
7
8
9
10
11
12
13
14
15
16
17
18
19
20
21
22
23
24
25
26
27
28
29
30
31
32
33
34
35
36
37
38
39
40
41
42
43
44
45
46
47
48

Frame Group - Manual Steering

Item	Part No	Qty	Description
1	1724081A	1	TOWER & SUPPORT ASSEMBLY
2	1923683	4	CAPSCREW, Hex Washer Head Taptite, 3/8-16 x 3/4
3	1960541	4	CAPSCREW, Hex Washer Head Taptite, 5/16-18 x 3/4
4	1723528A	1	SUPPORT, Seat Deck
5	1928352	2	NUT, Hex Flange 3/8-16 Whiz Lock, Large
6	1930644	2	NUT, Hex Flange Two-Way Lock, 1/2-13
7	1722602A	1	BACKPLATE
8	1923114	2	CAPSCREW, Hex Head 1/2-13 x 1, Black
9	1921210	2	CAPSCREW, Hex Head 3/8-16 x 1, Black
10	1733765A	1	FRAME ASSEMBLY, Front & Rear
11	1930645	7	NUT, Hex Flange Two-Way Lock, 3/8-16
12	1922755	1	WASHER, 3/8, Black
13	1960103	2	WASHER, 3/8, Black
14	1722541	1	LINK, Drag
15	1919262	1	NUT, Hex Jam 1/2-20
16	1702779A	1	JOINT, Ball
17	1708236	1	SPACER, 3/8 x 1/2 x 5/8
18	1931350	2	CARRIAGE BOLT, 3/8-16 x 1
19	1722626A	1	ROD, Tie
20	1722200A	1	AXLE ASSEMBLY w/LH Spindle (Includes Ref. Nos. 22, 24, 41)
21	1611705	2	SPACER, 25/64 x 5/8 x 5/16, Powder Metal
22	1721682	6	BUSHING, 31/32 x 1-1/4 x 3/4, Powder Metal
23	1930650	2	NUT, Hex Flange Two-Way Lock, 7/16-14
24	1704314	3	FITTING, Lube
25	1686985	1	SPINDLE REPLACEMENT KIT, LH (Includes Ref. Nos. 22, 26, 27)
26	2823485	1	CAPSCREW, 3/8-16 x 7/8, GR8
27	1663151	1	WASHER, Spring, 3/8
28	1725112	1	HUB & ARM ASSEMBLY
29	2830671	1	KEY, Woodruff
30	1724264	1	SPINDLE, LH
31	1931352	1	CARRIAGE BOLT, 3/8-16 x 1-1/2
32	1721752	1	SPACER, 11/16 x 21/32 x 2 3/32
33	1927531	2	CAPSCREW, Hex Head, 7/16-14 x 2 G8
34	1721918A	1	HOOK, “J”
35	1721805A	1	BUMPER, Black
35	1723502	1	BUMPER, Chrome
36	1960086	4	SCREW, Truss Head Torque Drive, 5/16-18 x 7/8

Footnotes:

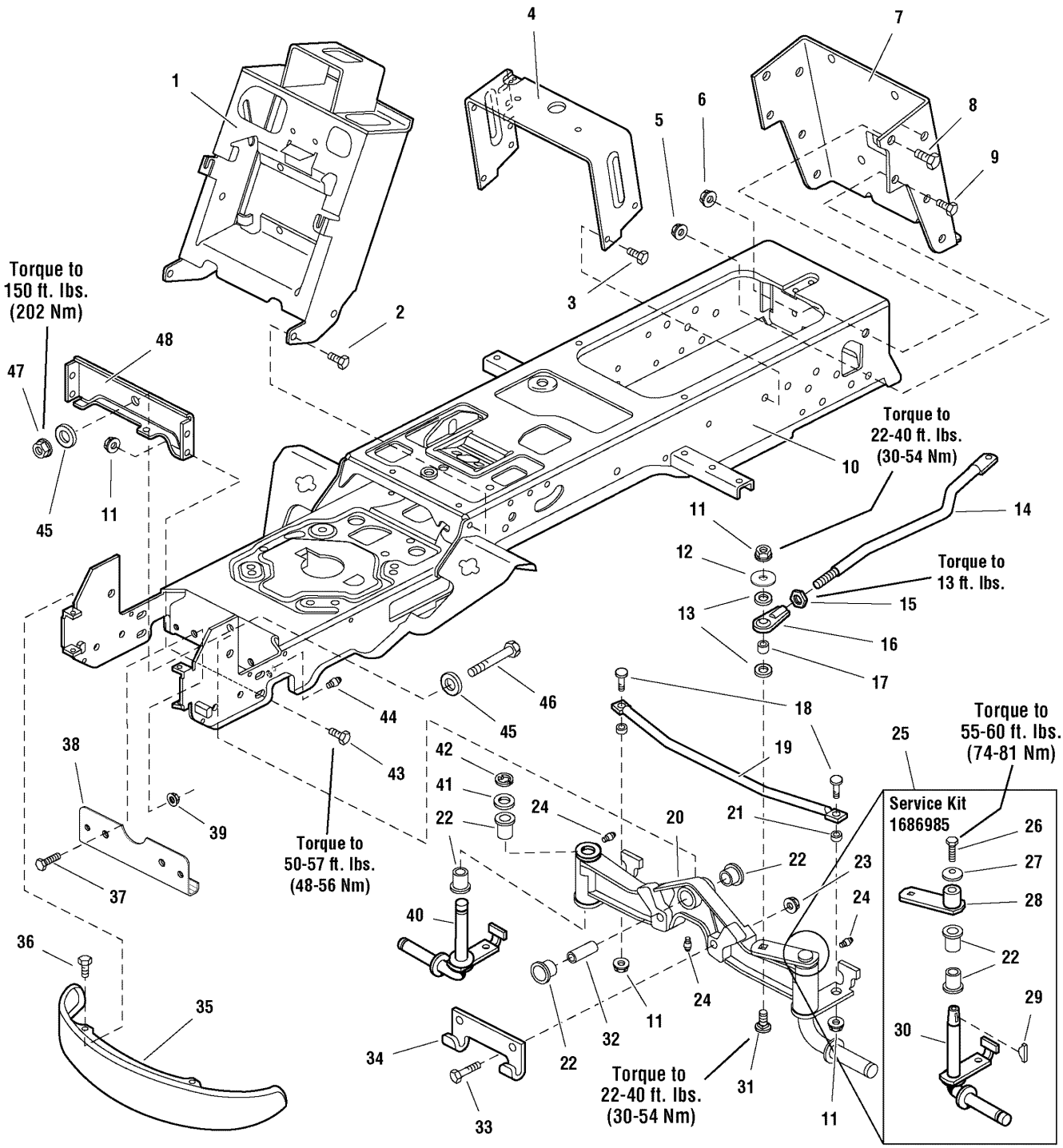
Torque to
150 ft. lbs.
(202 Nm)
Torque to
22-40 ft. lbs.
(30-54 Nm)
Torque to
13 ft. lbs.
Torque to
55-60 ft. lbs.
(74-81 Nm)
Torque to
50-57 ft. lbs.
(48-56 Nm)
Torque to
22-40 ft. lbs.
(30-54 Nm)
Service Kit
1686985
1
2
3
4
5
6
7
8
9
10
11
12
13
14
15
16
17
18
19
20
21
22
23
24
25
26
27
28
29
30
31
32
33
34
35
36
37
38
39
40
41
42
43
44
45
46
47
48

Frame Group - Manual Steering

Item	Part No	Qty	Description
37	1930591	2	CAPSCREW, Hex Whiz Lock, 5/16-18 x 3/4
38	1724801A	1	PLATE, Axle Wear
39	1931277	2	NUT, Hex Flange Whix Lick, 5/16-18
40	1722199	1	SPINDLE, RH
41	1919394	1	WASHER
42	2932577	1	RETAINING RING
43	1933260	4	CAPSCREW, Hex Flange Whiz Lock, 3/8-16 x 3/4
44	2921133	2	FITTING, Grease for Wear Plate
45	1960035	2	WASHER, 5/8
46	2960645	1	CAPSCREW, Hex Head, 5/8-11 x 3-1/2
47	2960646	1	NUT, Hex Flange Two-Way Lock, 5/8-11
48	1722212A	1	PLATE, Axle

Footnotes:

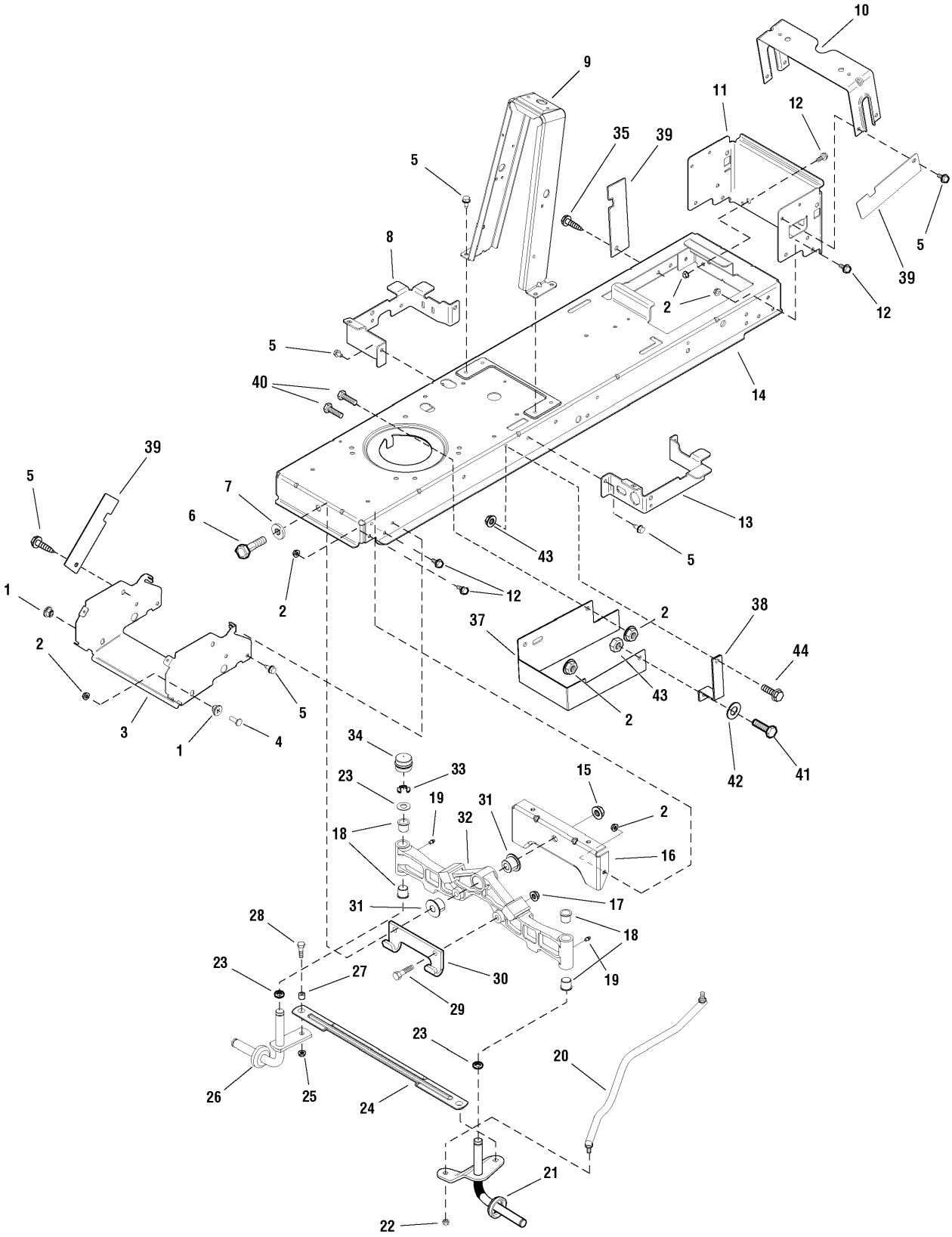
10
9
11
12
35
39
5
5
8
39
2
12
5
40
14
39
5
7
6
13
43
5
12
1
2
2
38
37
44
2
43
5
2
3
1
4
34
42
41
33
23
15
19
31
2
32
18
16
31
17
28
18
23
27
30
19
29
23
20
26
25
24
21
22

Frame & Front Axle Group

Item	Part No	Qty	Description
1	1728086	2	PIVOT, Hood Powdered Metal
2	1931277	16	NUT, Hex, Flange Whizlock, 5/16-18
3	1727982A	1	SUPPORT, Muffler, Hood 14GA
4	1931335	2	CARRIAGE BOLT, 5/16-18 x 1
5	1930601	14	SCREW, Taptite, 5/16-18 x 5/8
6	2860744	1	CAPSCREW, Hex Head, 5/8-11 x 3-1/4 G5
7	1960035	1	WASHER, Flat, 5/8
8	1727904A	1	SUPPORT, Front Footrest RH
9	1727260A	1	TOWER, 12GA
10	1731310A	1	SUPPORT, Seat Deck 12GA
11	1731309A	1	SUPPORT, Rear Frame 12GA
12	1930591	14	CAPSCREW, Hex Head, Flange Whiz Lock, 5/16-18 x 3/4
13	1727905A	1	SUPPORT, Front Footrest LH
14	1727901A	1	FRAME, 12GA
15	2860646	1	NUT, Hex Flange Two-Way Lock, 5/8-11
16	1727902A	1	PLATE, Axle Support
17	1930650	2	LOCKNUT, Hex, Flange, 7/16-14
18	2176440	4	BUSHING, Nylon, 3/4 Diameter
19	1704214	3	FITTING, Zerk
20	1727868	1	LINK, Drag
21	1727873A	1	SPINDLE & ARM ASSEMBLY, LH
22	1960747	2	NUT, Hex Nylock 3/8-24
23	1960160	4	WASHER, 3/4
24	1728080A	1	ROD, Tie
25	1930645	2	NUT, Hex, Flange, Locking, 3/8-16
26	1727872A	1	SPINDLE & CUP ASSEMBLY, RH
27	1731912	2	BUSHING, Powdered Metal
28	1960032	2	CAPSCREW, Hex Head, 3/8-16 x 1-1/4, .141 Thread G5
29	1927531	2	CAPSCREW, 7/16-14 x 2
30	1721918A	1	HOOK, “J”
31	1730186	2	BUSHING, Axle Pivot Powdered Metal
32	1728018	1	AXLE, Front Iron Casting Machined
33	1611710	2	RING, Klipring Extension
34	1726504	2	CAP, Hub
35	1664847	1	SCREW, Taptite 5/16-18 x 3/4
37	1736020A	1	GUARD, Clutch France Models Only

Footnotes:

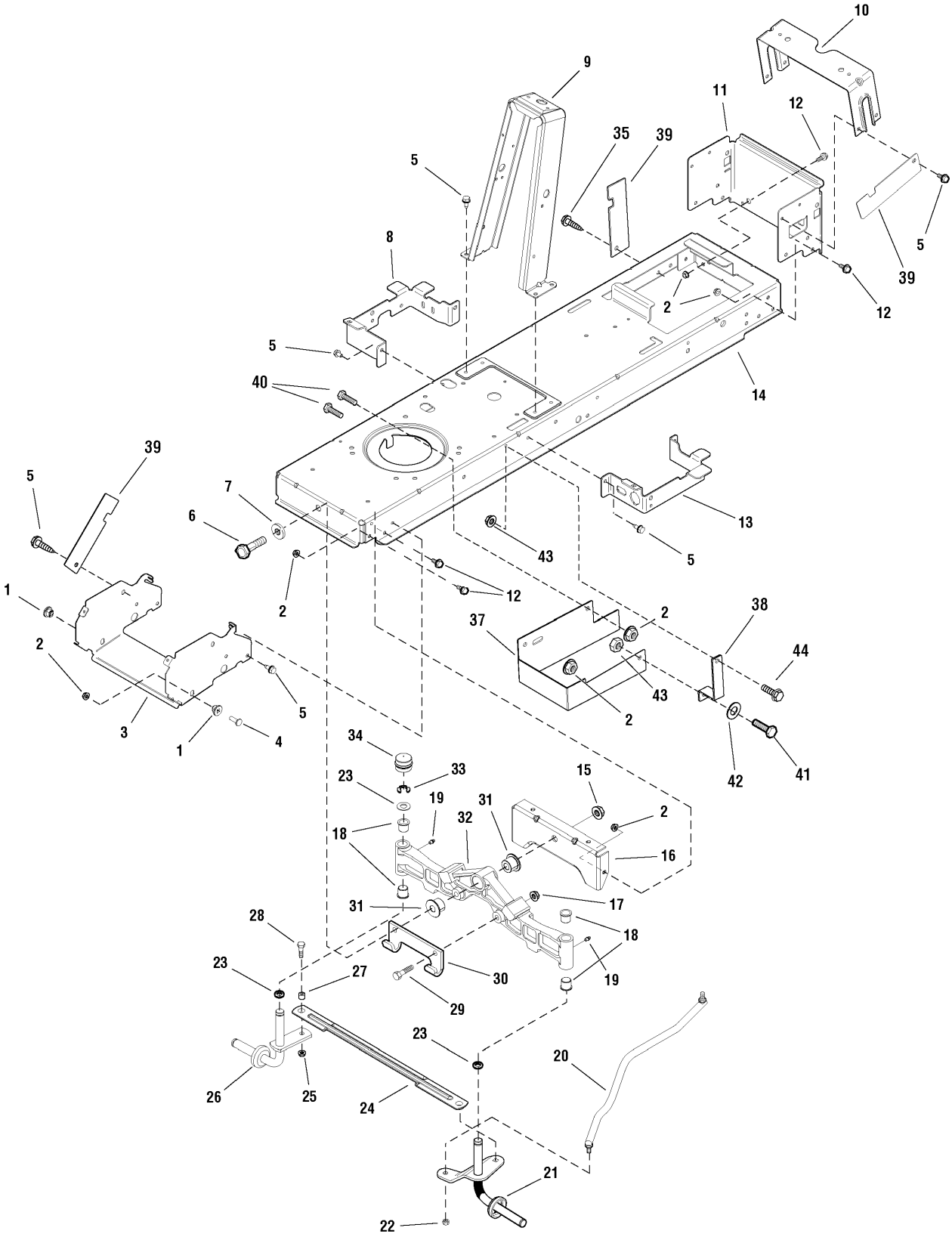
10
9
11
12
35
39
5
5
8
39
2
12
5
40
14
39
5
7
6
13
43
5
1
2
12
2
38
37
44
2
43
3
1
4
5
2
42
41
34
33
23
15
19
31
2
32
18
16
31
17
28
18
23
27
30
19
29
23
20
26
25
24
21
22

Frame & Front Axle Group

Item	Part No	Qty	Description
38	1736023A	1	SUPPORT, Guard France Models Only
39	1736025A	3	GUARD, Pulley Rear France Models Only
40	1921332	2	CAPSCREW, Hex 5/16-18 x 3/4 France Models Only
41	1921958	1	CAPSCREW, Hex 1/4-20 x 1/2 France Models Only
42	1921319	1	WASHER, 1/4 France Models Only
43	1920397	2	NUT, Hex Lock 1/4-20 France Models Only
44	2860664	1	CAPSCREW, 1/4-20 x 3/4 France Models Only

Footnotes:

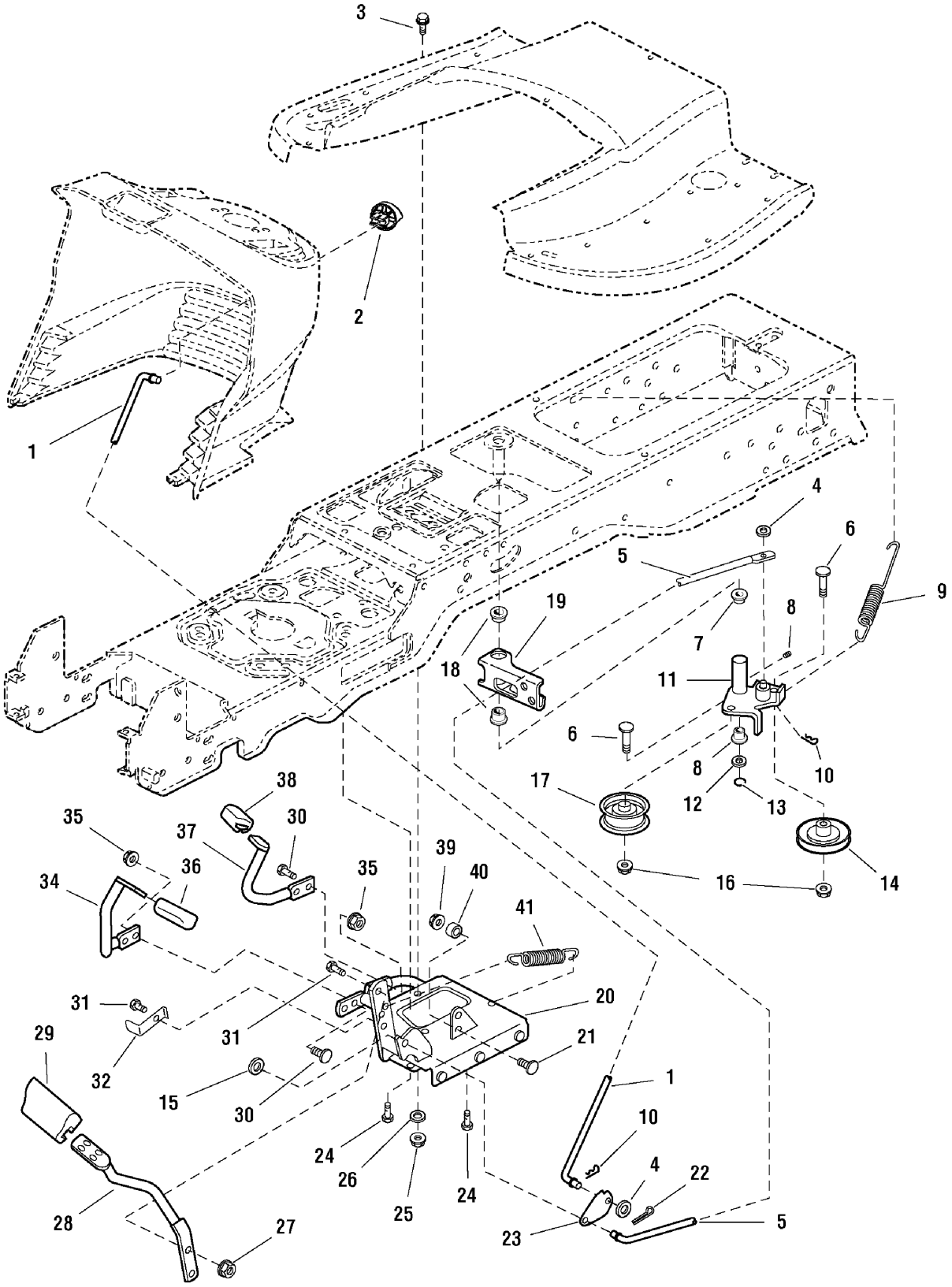
3
2
1
4
6
5
9
19
8
7
18
11
6
8
10
17
12
13
38
30
35
37
39
36
35
40
34
16
14
41
31
20
29
31
21
32
15
30
1
10
24
26
4
22
25
24
28
27
23
5

Controls Group

Item	Part No	Qty	Description
1	1721353	1	ROD, Brake Lock
2	1721891	1	KNOB, Push On, Red Plastic “P”
3	1930591	1	CAPSCREW, Hex Flange Whiz Lock, 5/16-18 x 3/4
4	1919326	2	WASHER, 5/16, Black
5	1721476	1	ROD, Brake
6	1931353	2	CARRIAGE BOLT, 3/8-16 x 1 3/4
7	1663114	2	BUSHING, 5/8 x 3/4 x 3/4, Nylon
8	2821133	1	FITTING, Lube, 1/4
9	1725250	1	SPRING, Extension
10	1722460	3	PIN, Quick
11	1724917	1	ARM & HUB ASSEMBLY, Idler
12	1960020	1	WASHER, 5/8
13	1704420	1	RING, Clipring Extension
14	1721134	1	PULLEY, w/Bearing
15	1924940	1	WASHER, 3/8
16	1960687	2	NUT, Hex Flange ESNA, 3/8-16
17	1721133	1	PULLEY, Idler
18	1723237	2	BUSHING, 1 x 1-1/8 x 5/8, Nylon
19	1722513	1	ARM, Brake
20	1726763	1	PEDAL ASSEMBLY, Foot
21	1931320	1	CARRIAGE BOLT, 1/4-20 x 1-1/4
22	1918447	1	PIN, Cotter, Black
23	1721354A	1	LATCH, Brake
24	1664847	3	CAPSCREW, Hex Washer Head Taptite, 5/16-18 x 3/4
25	1919438	1	NUT, Hex Lock ESNA Light, 5/16-18
26	1919381	1	WASHER, 5/16, Black
27	1927557	2	NUT, Hex Flange Whiz Lock Large, 5/16-18
28	1722535A	1	PEDAL, Brake
29	1721577	1	PAD, Brake Pedal
30	1931334	4	CARRIAGE BOLT, 5/16-18 x 7/8
31	1921333	2	CAPSCREW, 5/16-18 x 1
32	1722083A	1	ACTUATOR, Switch 2.53” Long
34	1722070A	1	PEDAL, Forward
35	1960636	4	NUT, Hex KEPS, 5/16-18
36	1721675	1	PAD, Foot Pedal Forward
37	1722071A	1	PEDAL, Reverse

Footnotes:

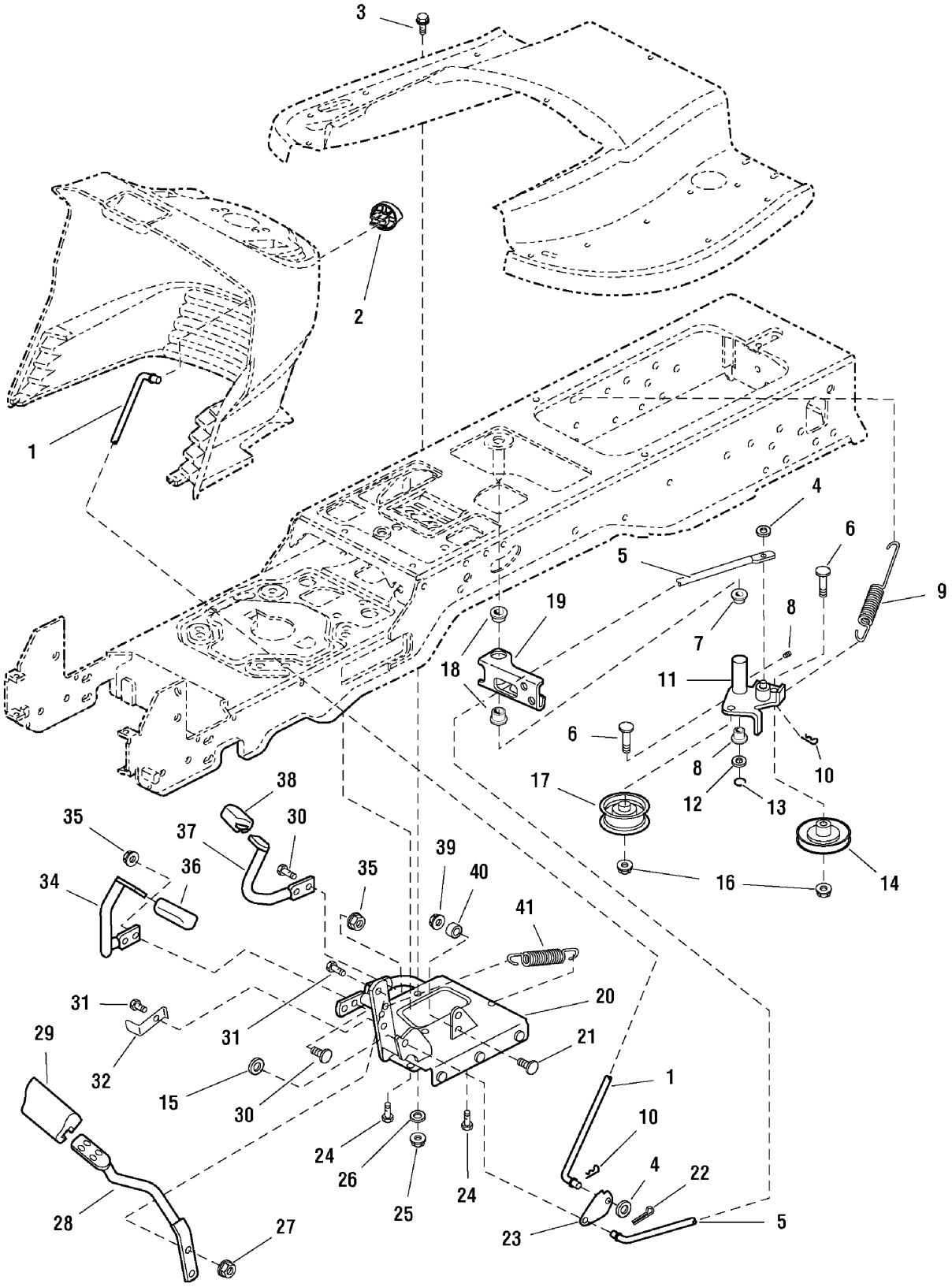
3
2
1
4
6
5
9
19
8
7
18
11
6
8
10
17
12
13
38
30
35
37
39
36
35
40
34
16
14
41
31
20
29
31
21
32
15
1
30
10
24
4
22
26
24
25
28
27
23
5

Controls Group

Item	Part No	Qty	Description
38	1721674	1	PAD, Foot Pedal Reverse
39	1920397	1	NUT, Hex Lock ESNA Light, 1/4-20
40	1686612	1	CAM, Roller
41	1721995	1	SPRING, Extension

Footnotes:

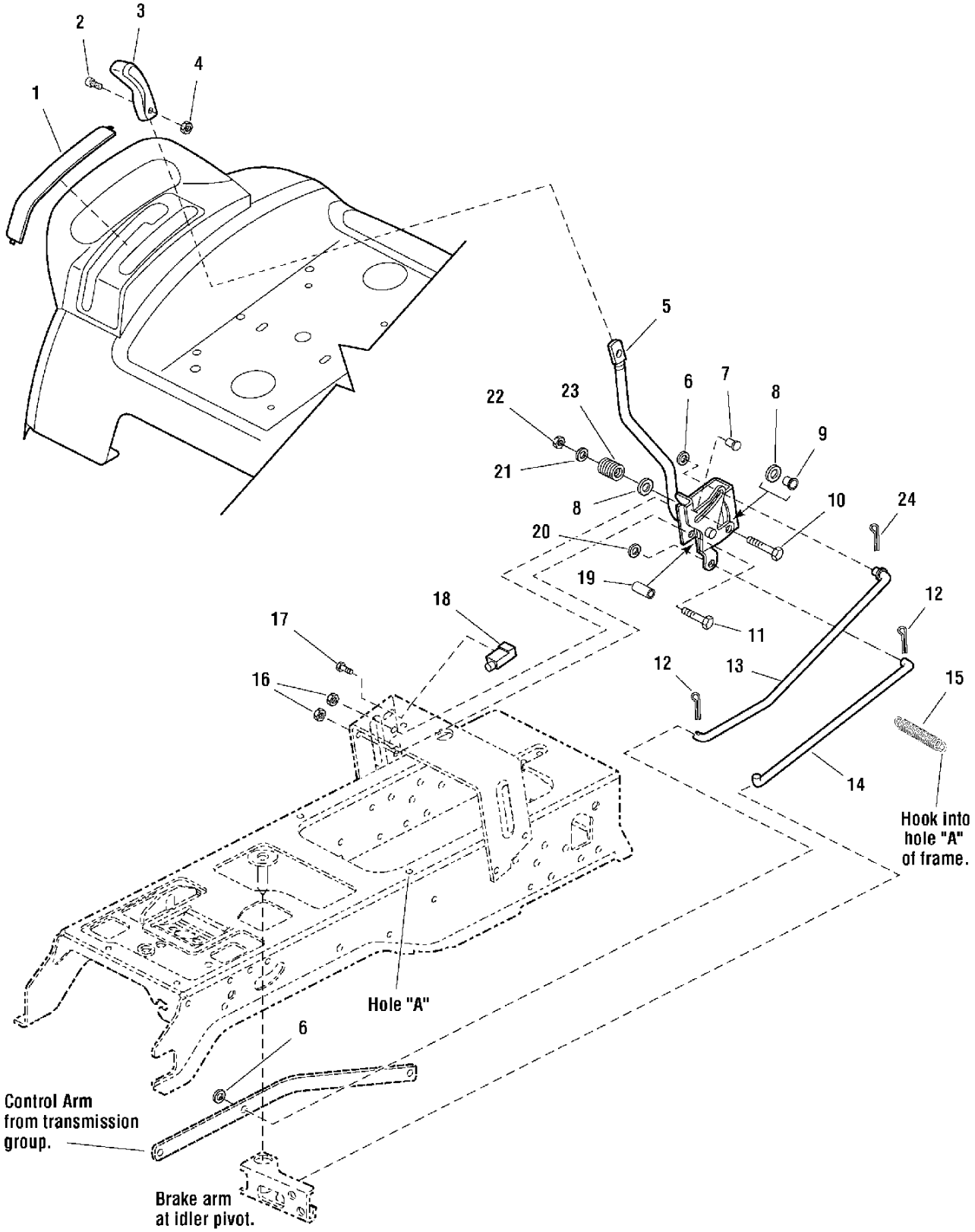
1
2
3
4
5
6
7
8
9
10
11
12
13
14
15
16
17
18
19
20
21
22
23
24
Hook into hole "A" of frame.
Hole "A"
Control Arm from transmission group.
Brake arm at idler pivot.

Cruise Control Group

Item	Part No	Qty	Description
1	1722314	1	COVER, w/Cruise Icon
2	1960666	1	SCREW, Torque Head Plus Socket Head, 1/4-20 x 7/8
3	1722303	1	KNOB, Cruise
4	1920397	1	NUT, Hex Lock ESNA Light, 1/4-20
5	1722003	1	LEVER & BRACKET ASSEMBLY, Cruise
6	1960103	2	WASHER, 3/8, Black
7	1931333	1	CARRIAGE BOLT, 5/16-18 x 3/4
8	1924361	2	WASHER, 1/2
9	1709043	1	SPACER, w/Flange, 11/32 x 15/32 x 3/4
10	1931342	1	CARRIAGE BOLT, 5/16-18 x 2-3/4
11	1960273	1	CARRIAGE BOLT, 5/16-18 x 2-1/4
12	1722460	2	PIN, Quick
13	1722117	1	ROD, Cruise
14	1722481	1	ROD, Return
15	2159106	1	SPRING, Cruise Return to Frame
16	1960636	2	NUT, Hex KEPS, 5/16-18
17	1960001	2	CAPSCREW, Hex Washer Head Plastite, 10-14 x 5/8
18	1717050	1	SWITCH, Push, Neutral Start, Gray
19	1722080	1	SPACER, 11/32 x 5/8 x 1-13/32
20	1919326	1	WASHER, 5/16, Black
21	1919381	1	WASHER, 5/16, Black
22	1919438	1	NUT, Hex Lock ESNA Light, 5/16-18
23	1677746	1	SPRING, Compression
24	1918447	1	PIN, Cotter

Footnotes:

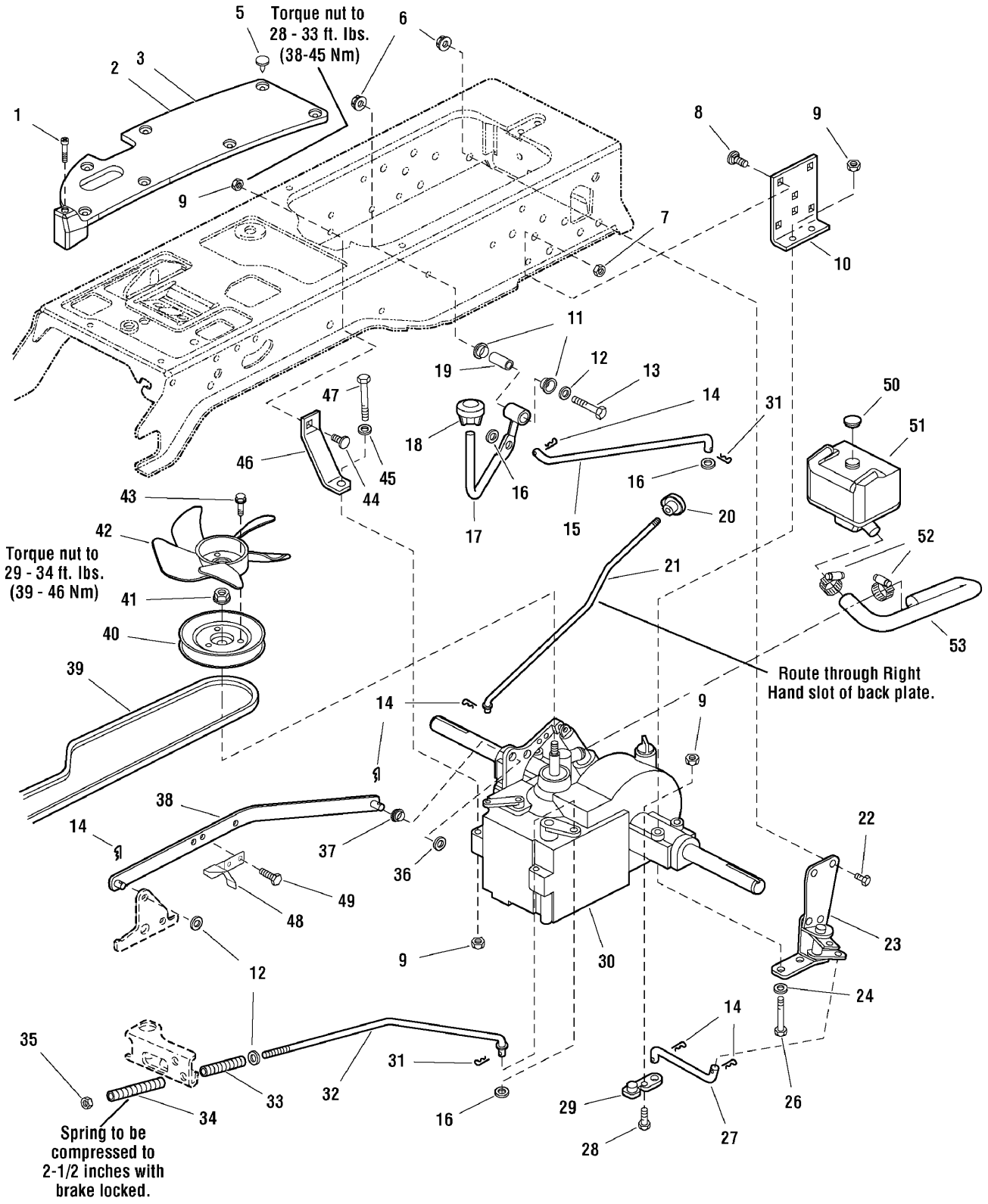
Torque nut to
28 - 33 ft. lbs.
(38-45 Nm)
Torque nut to
29 - 34 ft. lbs.
(39 - 46 Nm)
Route through Right
Hand slot of back plate.
Spring to be
compressed to
2-1/2 inches with
brake locked.

Transmission Group

Item	Part No	Qty	Description
1	1960676	2	SCREW, Pan Head Torx Taptite, 1/4-20 x 1-1/4
2	1722174	1	PAD, Footrest, LH, Differential Lock
3	1722173	1	PAD, Footrest, RH
5	1704351	15	FASTENER, 11/16" Long, Stem Plastic
6	1928352	2	NUT, Hex Flange Whiz Lock, 3/8-16, Large
7	1960637	6	NUT, Hex KEPS, 3/8-16
8	1931350	6	CARRIAGE BOLT, 3/8-16 x 1
9	1960686	7	NUT, Hex Flagne ESNA, 5/16-18
10	1721728A	2	SUPPORT
11	1676148	2	BUSHING, 5/8 x 3/4 x 13/32, Powder Metal
12	1924940	3	WASHER, 3/8
13	1922130	1	CAPSCREW, Hex Head, 3/8-16 x 2-1/4
14	1722460	6	PIN, Quick
15	1722151	1	ROD, Differential Lock, 15-3/16 Long
16	1918267	3	WASHER, 7/16
17	1721360	1	ROD & TUBE ASSEMBLY, Differential Lock Pedal
18	1716289	1	KNOB
19	1669105	1	SPACER, 25/64 x 5/8 x 1-1/2, Hardened
20	1723126	1	KNOB, 3 Sided Soft
21	1721622	1	ROD, Free Wheel, 18-3/16 Long
23	1722903	1	PIVOT ASSEMBLY, Differential Lock
24	1919326	2	WASHER, 5/16, Black
26	1960590	4	CAPSCREW, Hex Head, 5/16-18 x 3
27	1722152	1	ROD, Differential Latch, 2 Bends, 6-3/16 Long
28	1921333	1	CAPSCREW, Hex Head, 5/16-18 x 1
29	1722383	1	ARM, Differential Lock
30	1733941	1	TRANSMISSION ASSEMBLY, K66 Transmission
30	1733208	1	TRANSMISSION ASSEMBLY, K66 Transmission (Used on models with tranmission expansion tank.)
31	1918447	1	PIN, Cotter, 3/4, Black
32	1721424	1	ROD, Brake, 17-27/64 Long
33	1722684	1	SPRING, Compression
34	8191045	1	SPRING, Compression
35	1960687	2	NUT, Hex Flange ESNA, 3/8-16
36	1960027	1	WASHER, Flat, 1/2
37	1722648	1	BEARING, Nyliner

Footnotes:

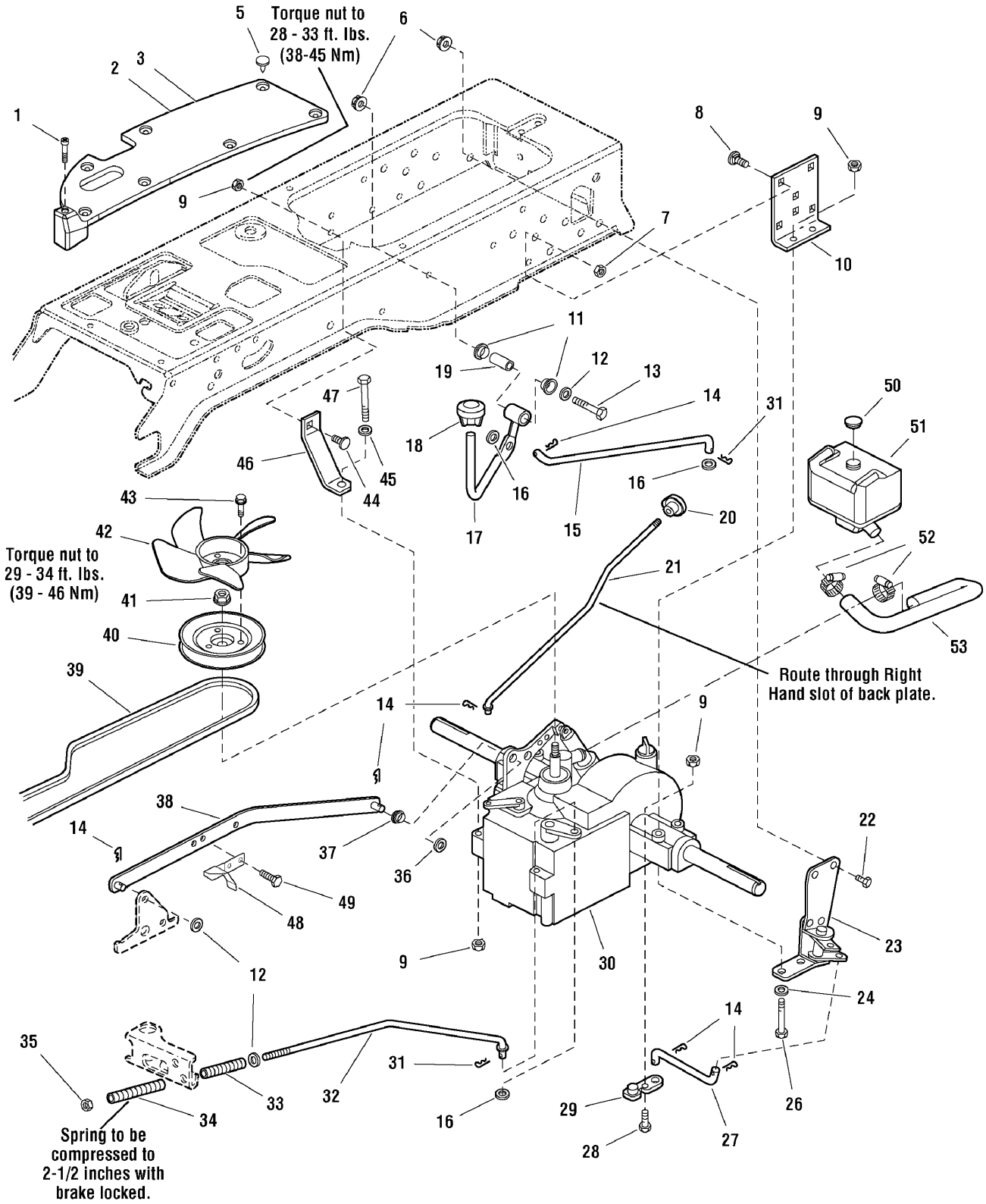
Torque nut to
28 - 33 ft. lbs.
(38-45 Nm)
Torque nut to
29 - 34 ft. lbs.
(39 - 46 Nm)
Route through Right
Hand slot of back plate.
Spring to be
compressed to
2-1/2 inches with
brake locked.

Transmission Group

Item	Part No	Qty	Description
38	1726757	1	ARM & WELD PINS ASSEMBLY, Control K66
39	1721392	1	V-BELT
40	1722194	1	PULLEY & HUB ASSEMBLY, Transmission
41	1719968	1	NUT, Hex Flange, M10-1.5, Nylon Insert
42	1719233	1	FAN, 5 Blades, 3 Holes
43	1933958	3	CAPSCREW, Hex Washer Head Taptite, 1/4-20 x 1-1/8
44	1931335	1	CARRIAGE BOLT, 5/16-18 x 1
45	1960141	1	WASHER, 5/16
46	1721593A	1	STRAP, 4-1/4 Long
47	1921719	1	CAPSCREW, Hex Head, 5/16-18 x 2-1/2
48	1727215A	1	ACTUATOR, Switch
49	1924856	2	CAPSCREW, Hex Head Taptite, 5/16-18 x 1/2
50	1722711	1	CAP, Expansion Tank Plastic (Used on models with tranmission expansion tank.)
51	1722430	1	TANK, Oil Natural (Used on models with tranmission expansion tank.)
52	1723214	2	CLAMP, Hose Worm Drive #20 1-3/4" (Used on models with tranmission expansion tank.)
53	1722468	1	HOSE, Expansion Tank Formed (Used on models with tranmission expansion tank.)
54	1732129	1	BOLT, Shoulder, 3/8-16

Footnotes:

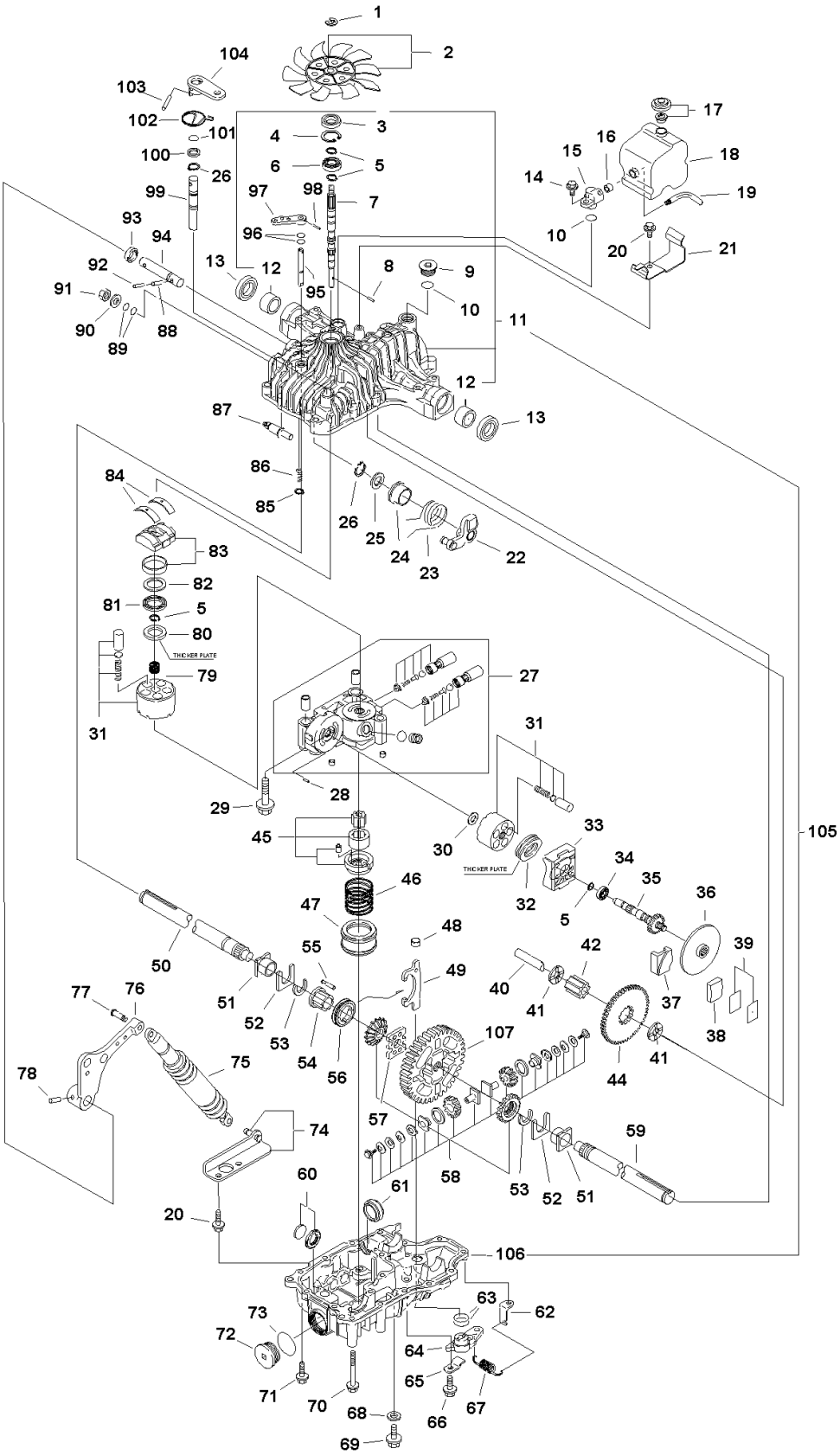
THICKER PLATE
THICKER PLATE

TRANSMISSION SERVICE PARTS - Tuff Torq K-66L

Item	Part No	Qty	Description
1	7073756	1	RING E15 Was 1718076
2	7073753	1	FAN Was 1724314
3	7073794	1	SEAL Was 1708651
4	1708650	1	RING 35
5	1708672	4	RING 15
6	7073792	1	BEARING 6202UC3 Was 1718083
7	1724699	1	SHAFT, PUMP
8	1722223	1	PIN 3 x 13.8
9	1724696	1	CAP, M20B
10	1707786	2	O-RING, P18
11	1724692	1	HOUSING, UPPER
12	1724693	2	BUSHING, 25.4
13	1718264	2	SEAL S25.4 x 42 x 8
14	1724695	1	BOLT, 8 x 20
15	1724746	1	FITTING
16	1724745	1	SEAL, 8
17	1724740	1	VALVE, VENT 15
18	1724742	1	TANK, RESERVOIR
19	1724743	1	PIPE, 8
20	1707890	3	SCREW, TAPPING
21	1724744	1	BRACKET, TANK
22	1724708	1	ARM, CONTROL
23	1724709	1	SPRING, TORSION
24	1721181	1	COLLAR, CONTROL
25	1721966	1	WASHER 17 x 30 x 1
26	1707912	2	RING
27	1724697	1	CASE, CENTER
28	7073784	1	PIN 3 x 9.8 Was 1718070
29	1724698	3	BOLT, 10 x 65
30	1718084	1	WASHER 12 x 24 x 1
31	7073786	2	CYLINDER BLOCK Was 1718079
32	1708675	1	BEARING, THRUST
33	1724700	1	HOUSING
34	1724702	1	BEARING, 6302UC3
35	1724701	1	SHAFT, MOTOR
36	1724723	1	DISC, BRAKE
37	1724726	1	ACTUATOR, BRAKE

Footnotes:

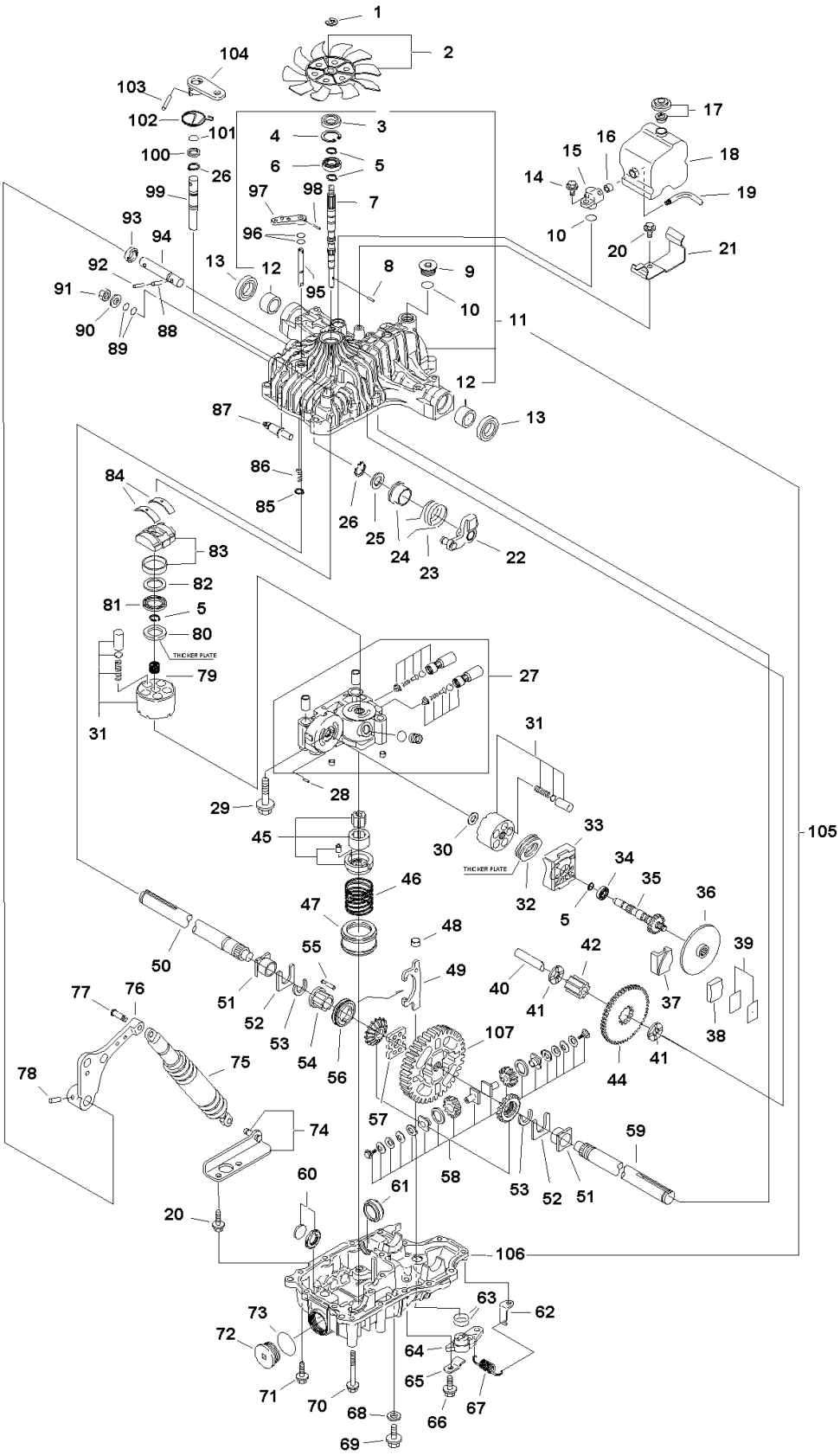
THICKER PLATE
THICKER PLATE

Item	Part No	Qty	Description
38	1724724	1	SHOE, BRAKE
39	1724725	1	SHIM SET
40	1724714	1	SHAFT, FINAL PINION
41	1724715	2	WASHER, 15 x 32 x 3.2
42	1724717	1	PINION, FINAL
44	1724716	1	GEAR, REDUCTION
45	1724729	1	PUMP, CHARGE
46	1724730	1	SPRING, CHARGE PUMP
47	1725633	1	FILTER (25)
48	1724733	1	FORK, PIVOT
49	1724731	1	FORK, DIFF LOCK
50	1724719	1	SHAFT, AXLE RH #1
51	1720860	2	BUSHING
52	1720858	2	THRUST WASHER
53	1720859	2	RING
54	1724720	1	COLLAR, 25.4
55	1724737	8	PIN, DIFF LOCK
56	1724736	1	SLIDER, DIFF LOCK
57	1724738	1	PLATE, DIFF LOCK
58	1718262	1	DIFFERENTIAL GEAR KIT
59	1724718	1	SHAFT, AXLE LH #1
60	1718065	1	MAGNET
61	1720761	1	FILTER (25)
62	1724734	1	HOOK, SPRING
63	1724739	2	PACKING, 1AG25
64	1724732	1	ARM, DIFF LOCK
65	1724735	1	PLATE, ARM
66	1720788	2	BOLT 10 x 12
67	1724741	1	SPRING, RETURN
68	1720796	2	WASHER, SEAL
69	1720788	1	BOLT 10 x 12
70	1718226	5	BOLT, 8 x 75
71	1707789	5	SCREW, TAPPING
72	1720807	1	CAP (M40)
73	1720808	1	PACKING 1A 2040
74	1724704	1	STAY
75	1718039	1	SHOCK ABSORBER

Footnotes:

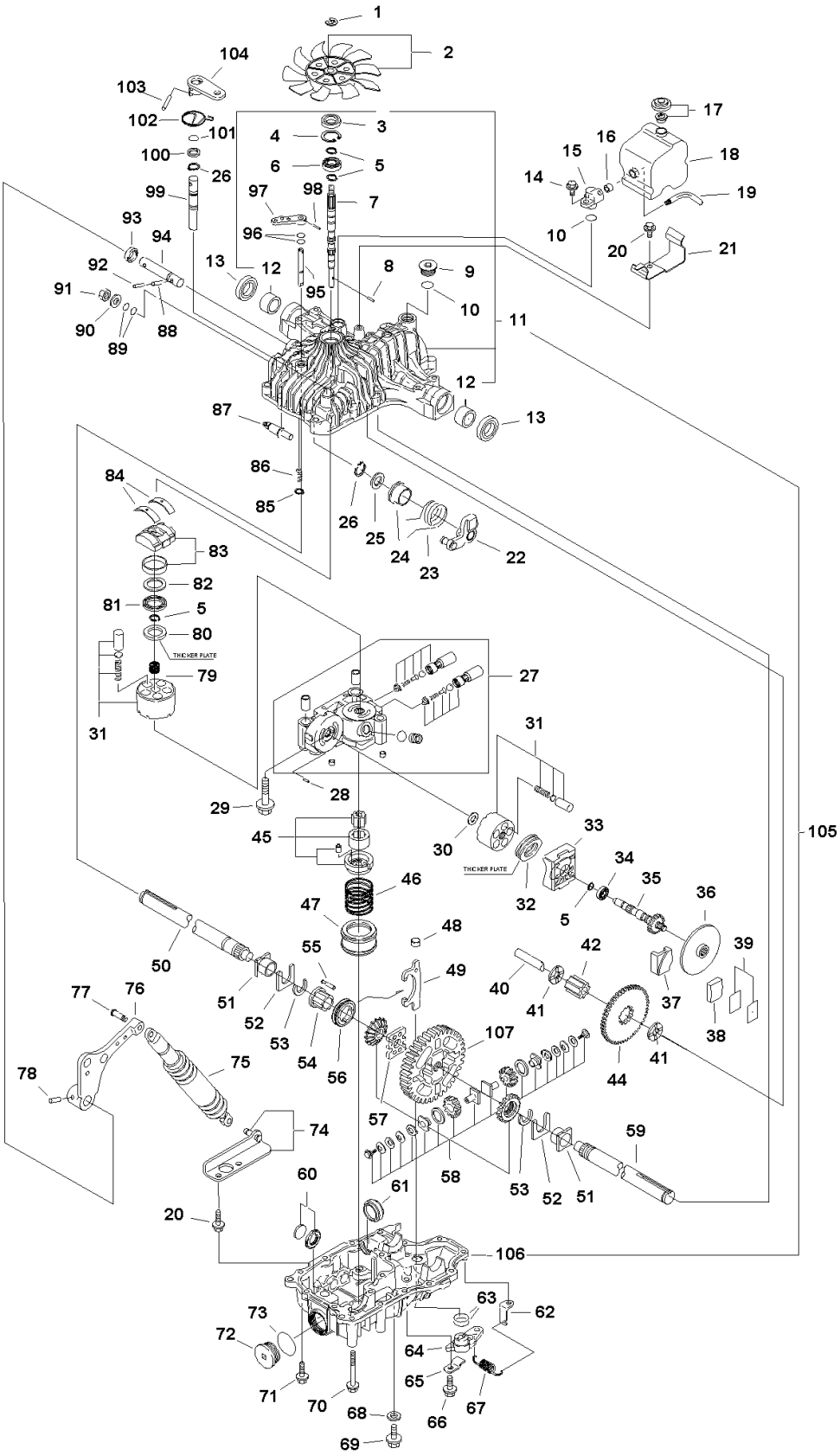
THICKER PLATE
THICKER PLATE

Item	Part No	Qty	Description
76	1724706	1	LEVER, CONTROL
77	1724705	1	PIN
78	1724707	1	PIN, 3.5 x 25
79	1718234	1	PUMP SHAFT
80	1721267	1	THRUST PLATE A
81	1718237	1	BEARING K81106
82	1718239	1	THRUST PLATE B
83	1724703	1	PLATE, SWASH
84	1718089	2	THRUST METAL
85	7073787	1	RING Was 1718061
86	1708684	1	SPRING
87	1724711	1	FULCRUM, ECCENTRICIT
88	1718097	1	PIN 6.0A x 25
89	1707879	2	PACKING
90	1708689	1	WASHER
91	1708692	1	NUT 12
92	1724712	1	PIN, 4 x 28
93	1718120	1	SEAL TC162606
94	1724710	1	SHAFT, CONTROL
95	1720838	1	SHAFT (BYPASS)
96	7073793	2	PACKING Was 1708691
97	7073750	1	LEVER, BYPASS Was 1720418
98	1707839	1	PIN 3.0A x 20 Was 1720421
99	1724727	1	SHAFT, BRAKE HL #10
100	1724728	1	WASHER, 16 x 23 x 1.6
101	7073763	1	PACKING Was 1708690
102	1724722	1	SPRING, BRAKE
103	1718100	2	PIN 6.0A x 4.0
104	1724721	1	ARM, BRAKE
105	1724691	1	HOUSING, COMPLETE SET
106	1724694	1	HOUSING, LOWER
107	1724713	1	GEAR, FINAL

Footnotes:

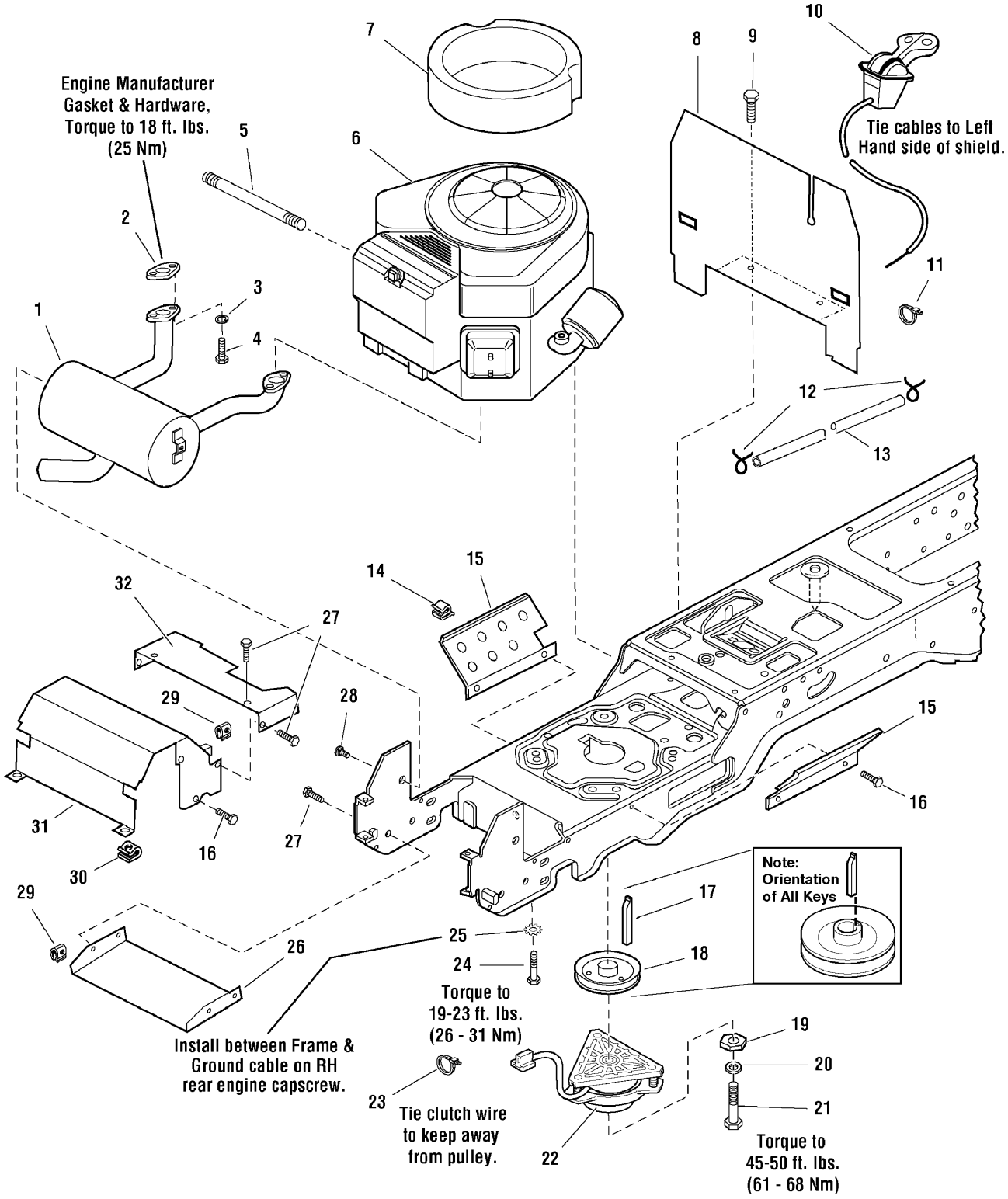
Engine Manufacturer Gasket & Hardware, Torque to 18 ft. lbs. (25 Nm)
Tie cables to Left Hand side of shield.
Note: Orientation of All Keys
Install between Frame & Ground cable on RH rear engine capscrew.
Torque to 19-23 ft. lbs. (26 - 31 Nm)
Tie clutch wire to keep away from pulley.
Torque to 45-50 ft. lbs. (61 - 68 Nm)
1
2
3
4
5
6
7
8
9
10
11
12
13
14
15
15
16
16
17
18
19
20
21
22
23
24
25
26
27
27
28
29
29
30
31
32

Engine Group - 20HP, 22HP & 23HP Briggs & Stratton, Vanguard Twin

Item	Part No	Qty	Description
1	1726920	1	MUFFLER
1	1722625	1	MUFFLER (Only used on 20HP Models)
3	1917356	4	LOCKWASHER, 5/16
4	2860660	4	CAPSCREW, Socket Head, 5/16-18 x 7/8, G8
5	1723165	1	HOSE, Oil Drain
6	386777-0111-E1	1	* ENGINE, 22HP B&S VANGUARD Twin Mod.
6	386777-0111-E1	1	* ENGINE, 23HP B&S VANGUARD Twin Mod.
6	385777-0119-E1	1	* ENGINE, 21HP B&S VANGUARD Twin Mod.
6	385777-0110-E1	1	* ENGINE, 20HP B&S VANGUARD Twin Mod.
7	1722949	1	SEAL, Circle
8	1722388A	1	BULKHEAD
9	1925003	2	CAPSCREW, Hex Head Taptite, 1/4-20 x 1/2
10	1727223	1	CONTROL, Throttle Double 39" Long w/Knobs (Only used on 20HP Models)
10	1734506	1	CONTROL, Throttle Double
11	1701011	1	TIE
12	2860112	2	CLAMP, Hose Type E
13	1718678	1	HOSE, 59" Long
14	2834683	2	CLIP, Wire
15	1722392A	2	SHIELD
16	1929000	8	SCREW, Hex Head Taptite, 1/4-20 x 3/8
17	1720463	1	KEY
18	1722288	1	PULLEY & HUB ASSEMBLY, 4-1/2 OD
19	1708264	1	WASHER, Hex
20	1918199	1	LOCKWASHER, 7/16
21	1960648	1	CAPSCREW, Hex Head, 7/16-20 x 2-3/4
22	1686883	1	CLUTCH, Electric, OGURA
22	1720532	1	CLUTCH, Electric, Big Brake OGURA
23	2832747	1	TIE
24	2830598	4	CAPSCREW, Hex Head Taptite, 3/8-16 x 1-1/2
25	2820427	1	LOCKWASHER, External Tooth, 3/8
26	1722414A	1	SHIELD, Muffler Bottom
27	1960295	8	CAPSCREW, Hex Head Flange Lock, 1/4-20 x 5/8
28	1924856	2	CAPSCREW, Hex Head Taptite, 5/16-18 x 1/2
29	1960368	8	NUT, Speed, 1/4-20
30	1935255	2	NUT, Speed, 5/16-18
31	1722389A	1	DUCT, Muffler Top

Footnotes:

Note* See your local Briggs & Stratton distributor for parts and service.

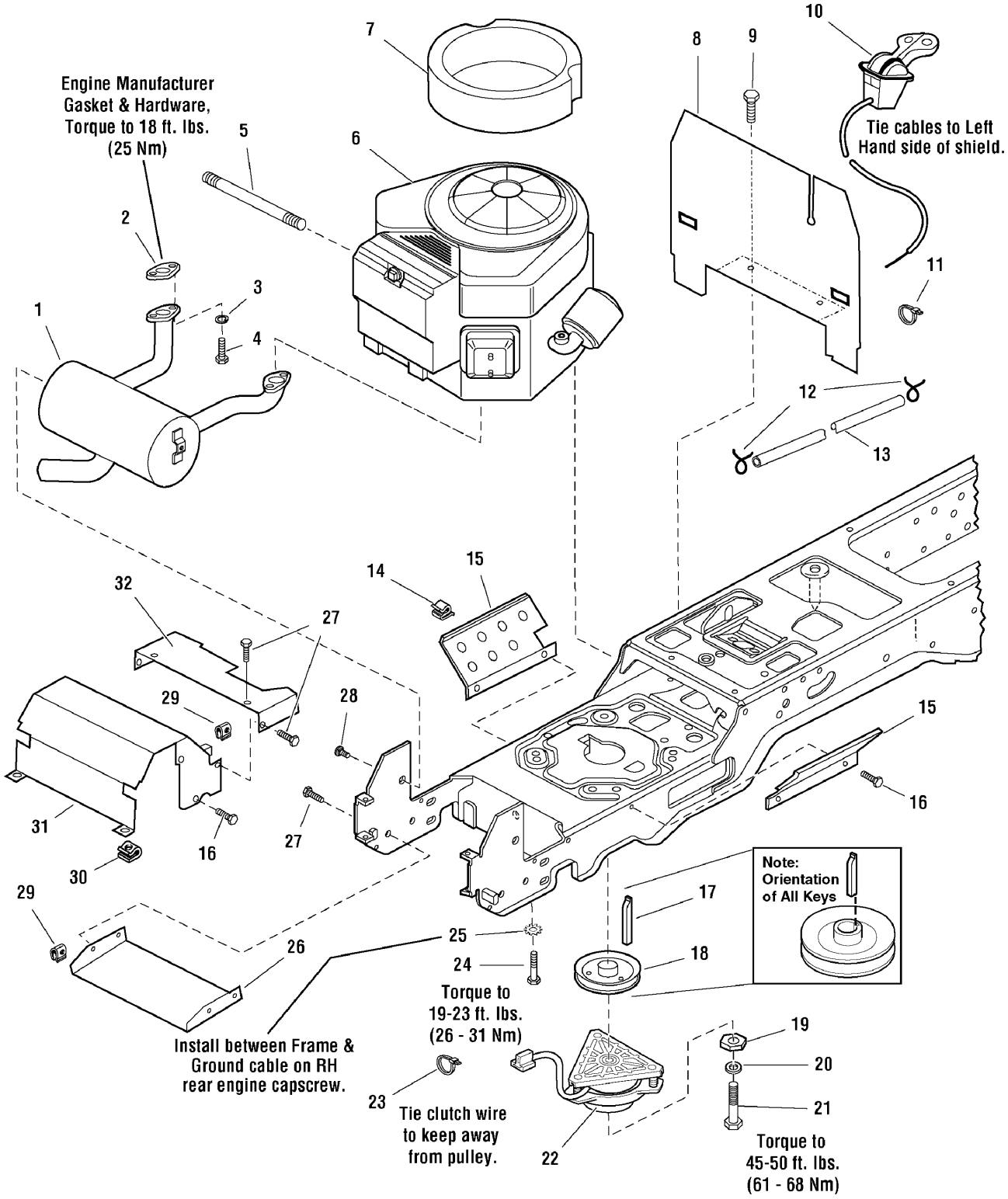
Engine Manufacturer Gasket & Hardware, Torque to 18 ft. lbs. (25 Nm)
Tie cables to Left Hand side of shield.
Note: Orientation of All Keys
Install between Frame & Ground cable on RH rear engine capscrew.
Torque to 19-23 ft. lbs. (26 - 31 Nm)
Tie clutch wire to keep away from pulley.
Torque to 45-50 ft. lbs. (61 - 68 Nm)
1
2
3
4
5
6
7
8
9
10
11
12
13
14
15
15
16
16
17
18
19
20
21
22
23
24
25
26
27
27
28
29
29
30
31
32

Item	Part No	Qty	Description
32	1722390A	1	DUCT, Muffler Extension

Footnotes:

Note* See your local Briggs & Stratton distributor for parts and service.

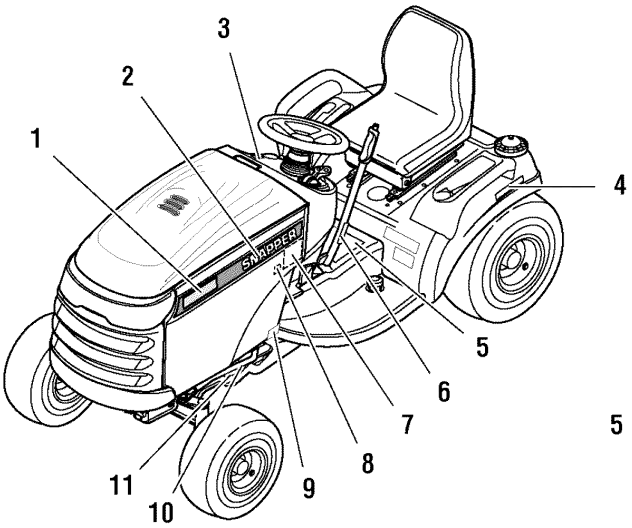
1
2
3
4
5
6
7
8
9
10
11
SIMPLICITY

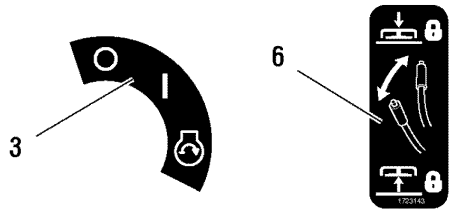
3
6
1723140

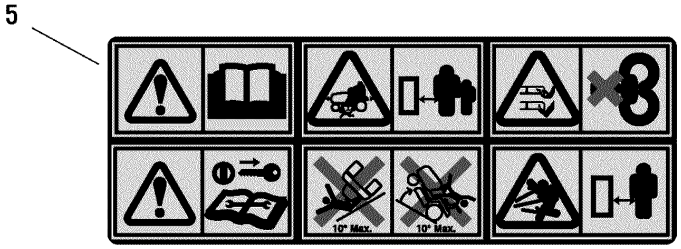
5
10° Max.
10° Max.

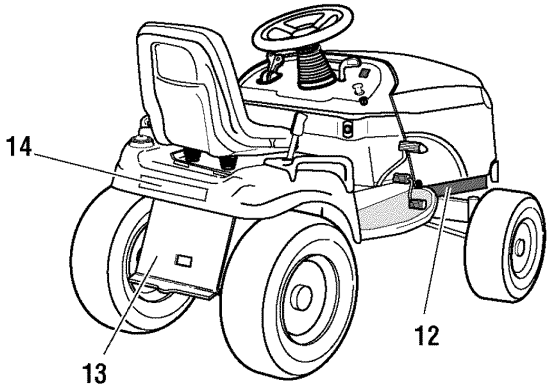
14
12
13

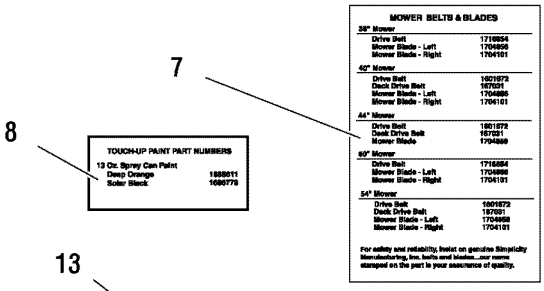
7
8
MOWER BELTS & BLADES
38" Mower
Drive Belt 1710954
Mower Blade - Left 1704956
Mower Blade - Right 1704101
42" Mower
Drive Belt 1601672
Deck Drive Belt 187031
Mower Blade - Left 1704956
Mower Blade - Right 1704101
44" Mower
Drive Belt 1601672
Deck Drive Belt 187031
Mower Blade 1704959
50" Mower
Drive Belt 1710954
Mower Blade - Left 1704956
Mower Blade - Right 1704101
54" Mower
Drive Belt 1601672
Deck Drive Belt 187031
Mower Blade - Left 1704956
Mower Blade - Right 1704101
For safety and reliability, insist on genuine Simplicity Manufacturing, Inc. belts and blades ... your name stamped on the part is your assurance of quality.
TOUCH-UP PAINT PART NUMBERS
12 Oz. Spray Can Paint
Deep Orange 1888011
Solar Black 1686778

13
STOP

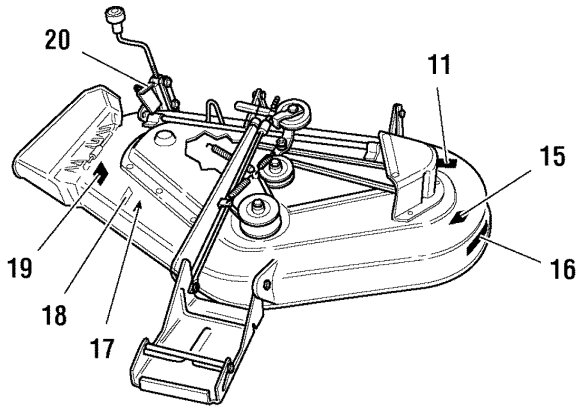
20
11
15
16
19
18
17

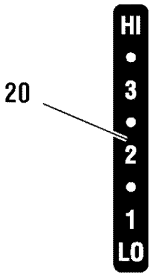
20
HI
3
2
1
LO

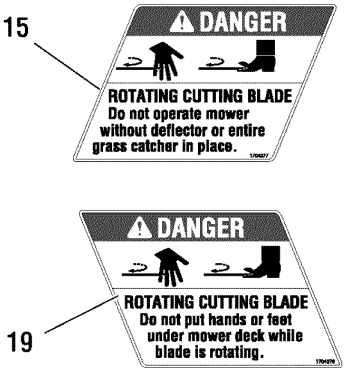
15
DANGER
ROTATING CUTTING BLADE
Do not operate mower without deflector or entire grass catcher in place.
DANGER
ROTATING CUTTING BLADE
Do not put hands or feet under mower deck while blade is rotating.
19

Decals Group

Item	Part No	Qty	Description
1	1731949	2	DECAL, YT400 23HP
1	1731930	2	DECAL, YT400 23HP
1	1727030	2	DECAL, YT2250
1	1727216	2	DECAL, YT2044
2	1725065	1	DECAL, Hood Stripe, Snapper, LH
2	1725066	1	DECAL, Hood Stripe, Snapper, RH
3	1722806	1	DECAL, Ignition Switch Symbols, White/Black
4	1718025	1	DECAL, Automatic Control Traction
5	1726923	1	DECAL, Tunnel Cover
5	1723175	1	DECAL, Tunnel Cover (CE/Export)
5	1734027	1	DECAL, Tunnel Cover 4x4 (CE/Export)
6	1723143	1	DECAL, Lift Lever Symbols
7	1727014	1	DECAL, Drive Belts, Mower Blades
8	1720454	1	DECAL, Touch-Up Paint, Red
9	1723296	2	DECAL, Protective Sticker
10		1	LABEL, Decibel, Power Mass (Not a service part)
11		2	DECAL, I.D. Plate (Not a service part)
12		1	DECAL, Patent (Not a service part)
13	1723160	1	DECAL, Transmission Release Valve
14	1731955	1	DECAL, Snapper w/stripe
14	1725061	1	DECAL, Snapper
15	1704276	1	DECAL, Danger Do Not Put Hands/Feet in Mower
16	1722771	1	DECAL, Free Floating Mower, Silver
17		1	DECAL, OPEI Certified (Not a service part)
18	1722789	1	DECAL, 44", Silver on Black with Stripe
18	1706640	1	DECAL, 50"
19	1704277	1	DECAL, Danger Do Not Operate Without Deflector
20	1721197	1	DECAL, Height of Cut

Footnotes:

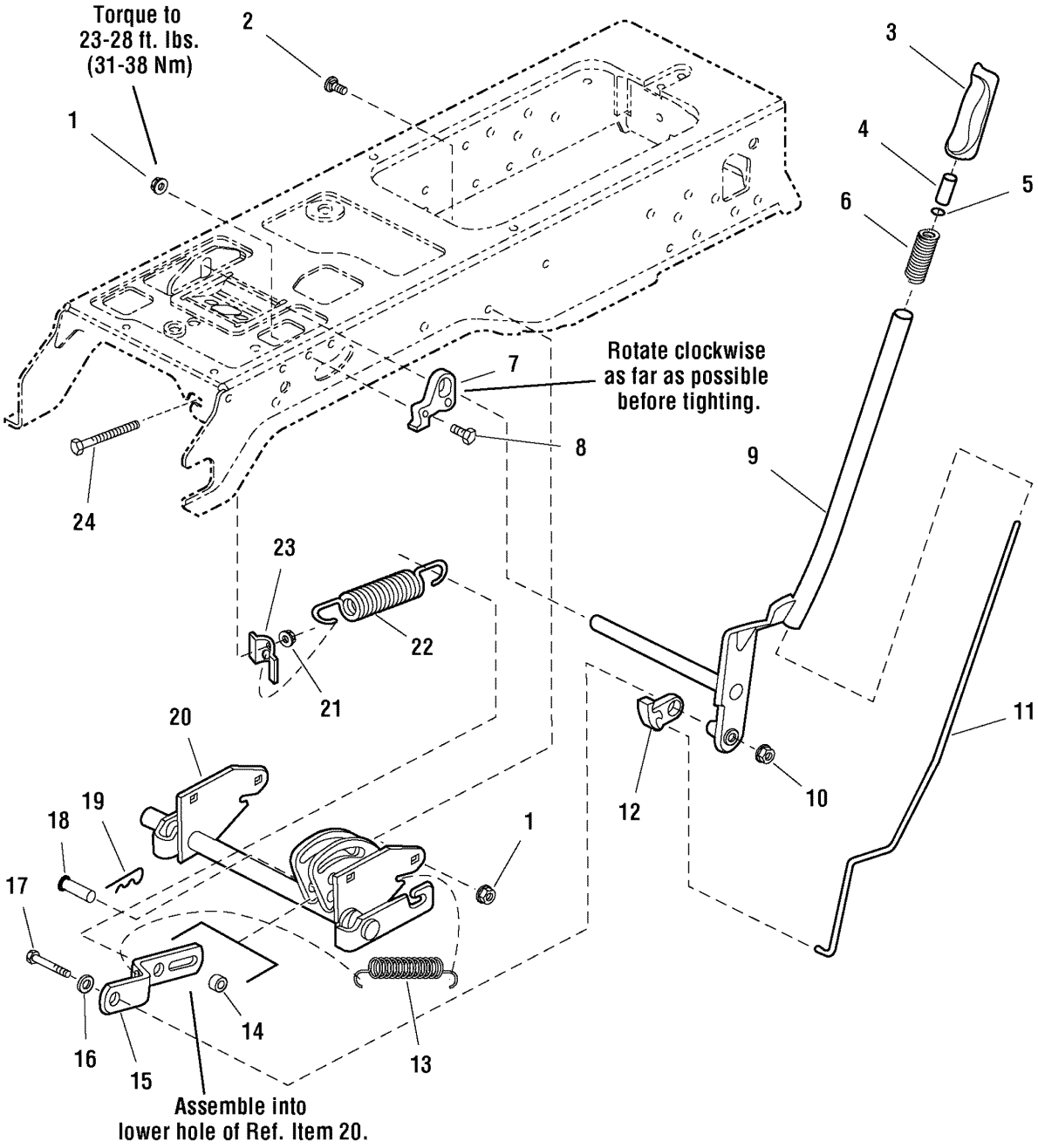
Torque to
23-28 ft. lbs.
(31-38 Nm)
1
2
3
4
5
6
7
Rotate clockwise
as far as possible
before tighting.
8
9
10
11
12
13
14
15
16
17
18
19
20
21
22
23
24
1
Assemble into
lower hole of Ref. Item 20.

Lift Group - Manual Lift

Item	Part No	Qty	Description
1	1927557	2	NUT, Hex Whiz Lock Flange, 5/16-18, Large, Black
2	1931333	4	CARRIAGE BOLT, 5/16-18 x 3/4
3	1722291	1	GRIP, Lift Lever
4	1723124	1	BUTTON, Red Nylon, for 1/4 Rod
5	1960674	1	NUT, Push
6	1723321	1	SPRING, Compression, Lift Lever
7	1721581	1	QUADRANT, Lift, Powdered Metal
8	1926149	2	CAPSCREW, Hex Head, 5/16-18 x 1, G8, Black
9	1721712A	1	LEVER ASSEMBLY, Lift
10	1960636	5	NUT, Hex KEPS, 5/16-18
11	1722482	1	ROD, Latch
12	1722112	1	LOCK, Lift, Powdered Metal
13	2156302	1	SPRING, Extension
14	1723163	1	SPACER, 1/2 x 3/4 x 23/32
15	1723795A	1	BAR, Lift, 9-7/8 Long
16	1919381	1	WASHER, 5/16, Black
17	1921160	1	CAPSCREW, Hex Head, 5/16-18 x 2-1/4
18	1722819	1	PIN, Flat Head Drilled, 1/2 x 2-1/8 Long
19	1960033	1	CLIP, Hair Pin, 2-9/16 Long
20	1727778A	1	SHAFT ASSEMBLY, Lift
21	1935255	1	NUT, Speed, 5/16-18, Lug
22	1675232	1	SPRING, Compression
23	1723499	1	RETAINER, Spring Flat
24	1722357	1	CAPSCREW, Hex Washer Head, 5/16-18 x 4-1/2

Footnotes:

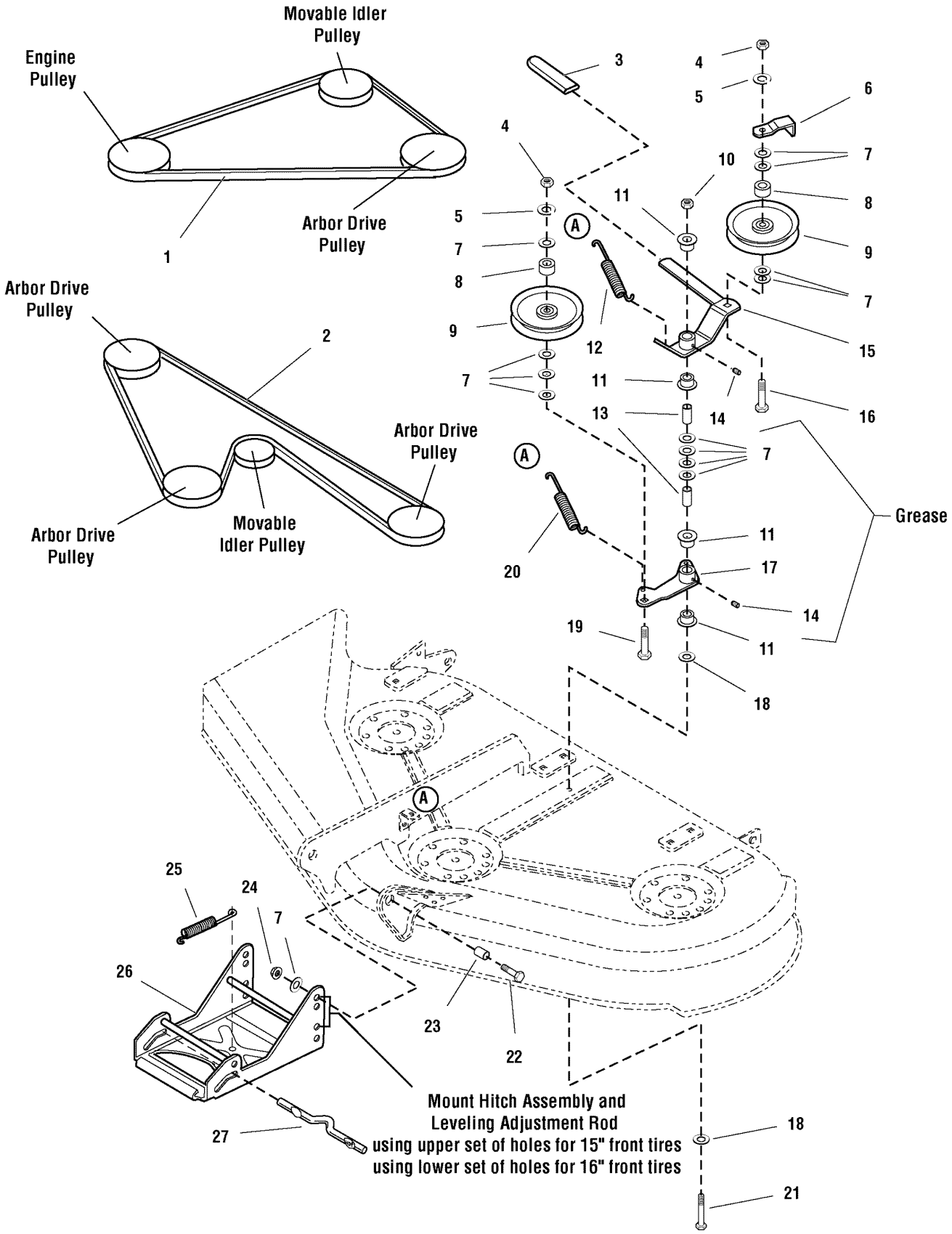
Movable Idler Pulley
Engine Pulley
Arbor Drive Pulley
1
Arbor Drive Pulley
2
Arbor Drive Pulley
Arbor Drive Pulley
Movable Idler Pulley
3
4
5
6
7
8
9
10
11
12
13
14
15
16
17
18
19
20
21
22
23
24
25
26
27
A
Grease
Mount Hitch Assembly and Leveling Adjustment Rod
using upper set of holes for 15" front tires
using lower set of holes for 16" front tires

44" Mower Deck - Belt, Idler Arm & Hitch

Item	Part No	Qty	Description
1	1601672	1	V-BELT, Mower Drive (61.1 EL, HA Sect.)
2	1721532	1	V-BELT, Arbor Drive (83.1 EL, HA Sect.)
3	1665835	1	GRIP, Lever
4	1916950	2	NUT, Hex, 3/8-16
5	1916965	2	WASHER, Lock, 3/8
6	1677135A	1	BELT STOP, Idler
7	1924940	14	WASHER, 3/8
8	1666294	2	SPACER, 25/64 x 21/32 x 7/16, Powder Metal
9	1685150	2	PULLEY, Idler, (Includes Ref. No. 8)
10	1960339	1	NUT, Hex Flange, 3/8-16, MAC Lock Large, Black
11	1676148	4	BUSHING, 5/8 x 3/4 x 13/32, Powder Metal
12	1715435	1	SPRING
13	1674669A	2	SPACER, 25/64 x 5/8 x 1-1/8, Case Hardened
14	2812808	2	GREASE FITTING
15	1704658	1	LEVER ASSEMBLY, Idler, (Includes Ref. Nos. 3, 11 & 14)
16	1960315	1	CARRIAGE BOLT, 3/8-16 x 2
17	1718561	1	LEVER ASSEMBLY, Idler Arm, (Includes Ref. Nos. 11 & 14)
18	1924356	2	WASHER, 3/8, Black
19	1931352	1	CARRIAGE BOLT, 3/8-16 x 1-1/2
20	1656936	1	SPRING
21	1923938	1	CAPSCREW, Hex Head, 3/8-16 x 3-1/2
22	1921968	2	CAPSCREW, Hex Head, 3/8-16 x 1-3/8
23	2157081	2	SPACER, 3/8 x 3/4 x 1/2
24	2860681	2	NUT, Hex Toplock Spiralock Flange, 3/8-16
25	2156302	1	SPRING
26	1707432A	1	HITCH ASSEMBLY
27	1715759	1	ROD, Latch

Footnotes:

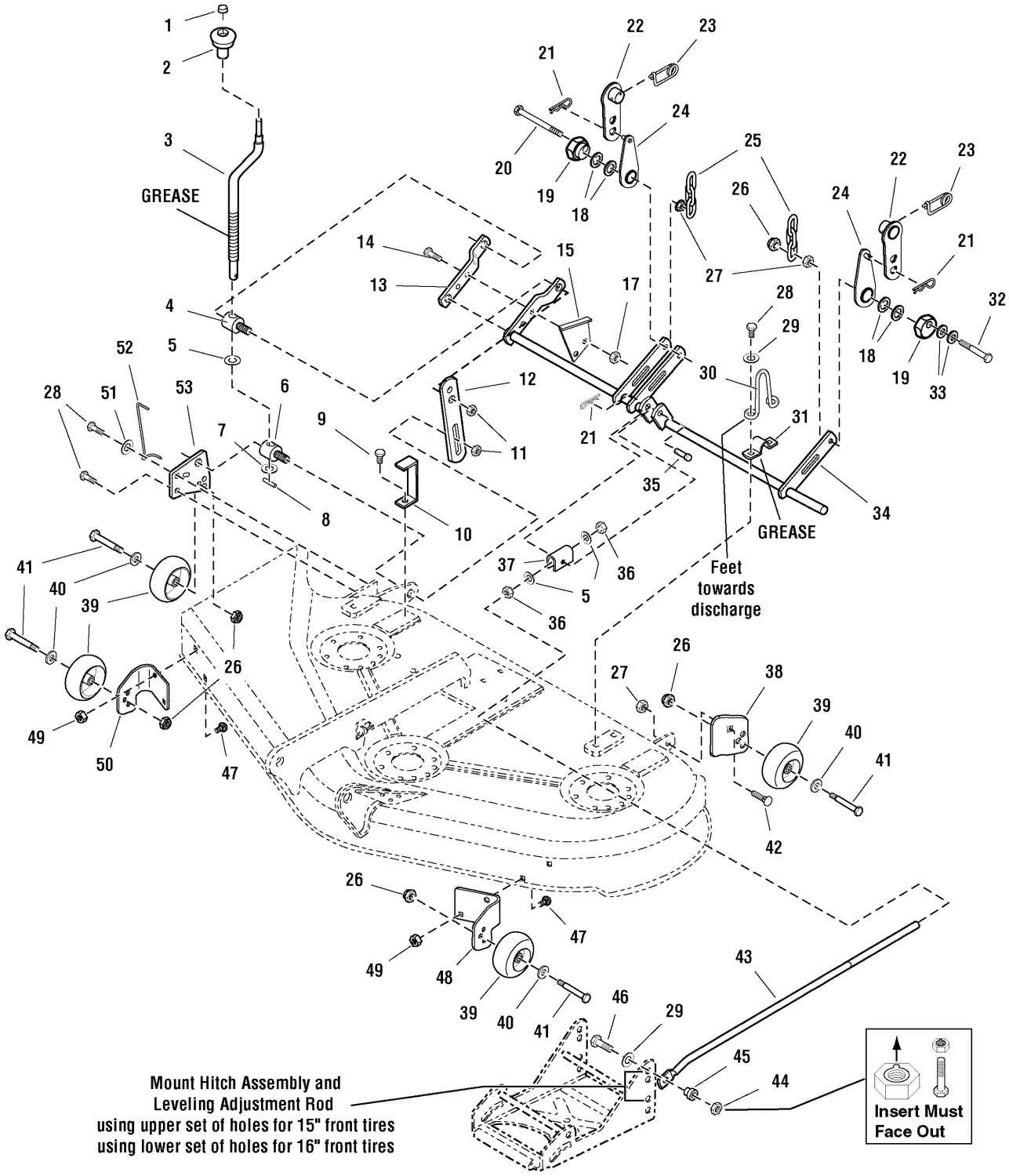
GREASE
GREASE
Feet towards discharge
Mount Hitch Assembly and Leveling Adjustment Rod using upper set of holes for 15" front tires using lower set of holes for 16" front tires
Insert Must Face Out

44" Mower Deck - Height Adjustment

Item	Part No	Qty	Description
1	1960093	1	NUT, Push Pal Stud Capped
2	1714084	1	KNOB, Spinner
3	1719901	1	CRANK, Height Adjustment
4	1704087	1	TRUNNION
5	1960170	3	WASHER, 1/2
6	1704086	1	TRUNNION
7	1704097	1	WASHER, Detent
8	2816001	1	PIN, Spring
9	1664847	5	SCREW, Hex Washer Head Taptite, 5/16-18 x 3/4
10	1722748A	1	BRACKET, Upstop
11	1930644	2	NUT, Hex Flange Two-Way Lock, 1/2-13
12	1727143A	1	STOP, Height Adjust
13	1704083A	1	ARM, 1-1/4 Wide 6-41/64 Long
14	1921977	2	CAPSCREW, Hex Head, 5/16-18 x 1-1/4 G5
15	1704116A	1	BRACKET, Height of Cut
17	1931277	2	NUT, Whiz Lock 5/16-18 NC-2B
18	2860208	4	WASHER, 1
19	1704082	2	NUT, Hex Adjust, Powdered Metal
20	1913709	1	CAPSCREW, Hex Head, 3/8-16 x 3 G5
21	1960074	3	CLIP, Hair Pin Spring Wire 1-5/8 Long
22	1727361A	2	HANGER & SPACER ASSEMBLY
23	2176012	2	RETAINER, Pin Spring
24	1727356A	2	HANGER & PIN ASSEMBLY
25	1707514A	2	CHAIN, Link 3 Links 4-1/2 Long
26	1960687	5	NUT, Hex Flange ESNA, 3/8-16
27	1931211	3	NUT, Hex Flange Whiz Lock Small, 3/8-16
28	1931202	4	SCREW, Hex Washer Head Taptite, 5/16-18 x 1-1/4
29	1924940	3	WASHER, 3/8
30	1722747	1	STOP, Up
31	1665374	3	STRAP
32	1922130	1	CAPSCREW, Hex Head, 3/8-16 x 2-1/4 G5
33	1922755	2	WASHER, 3/8
34	1727138A	1	SHAFT ASSEMBLY, Rocker 44"
35	2118053	1	PIN, Round Head Drilled, 3/8 x 2
36	1913744	2	NUT, Hex Jam, 1/2-13 NC-2B
37	1704081A	1	TRUNNION, 2 Wide for 9/16 Rod
38	1727135A	1	SUPPORT, Roller LH

Footnotes:

NOTE: This group applies to all models except Model YT2344 (2690754)

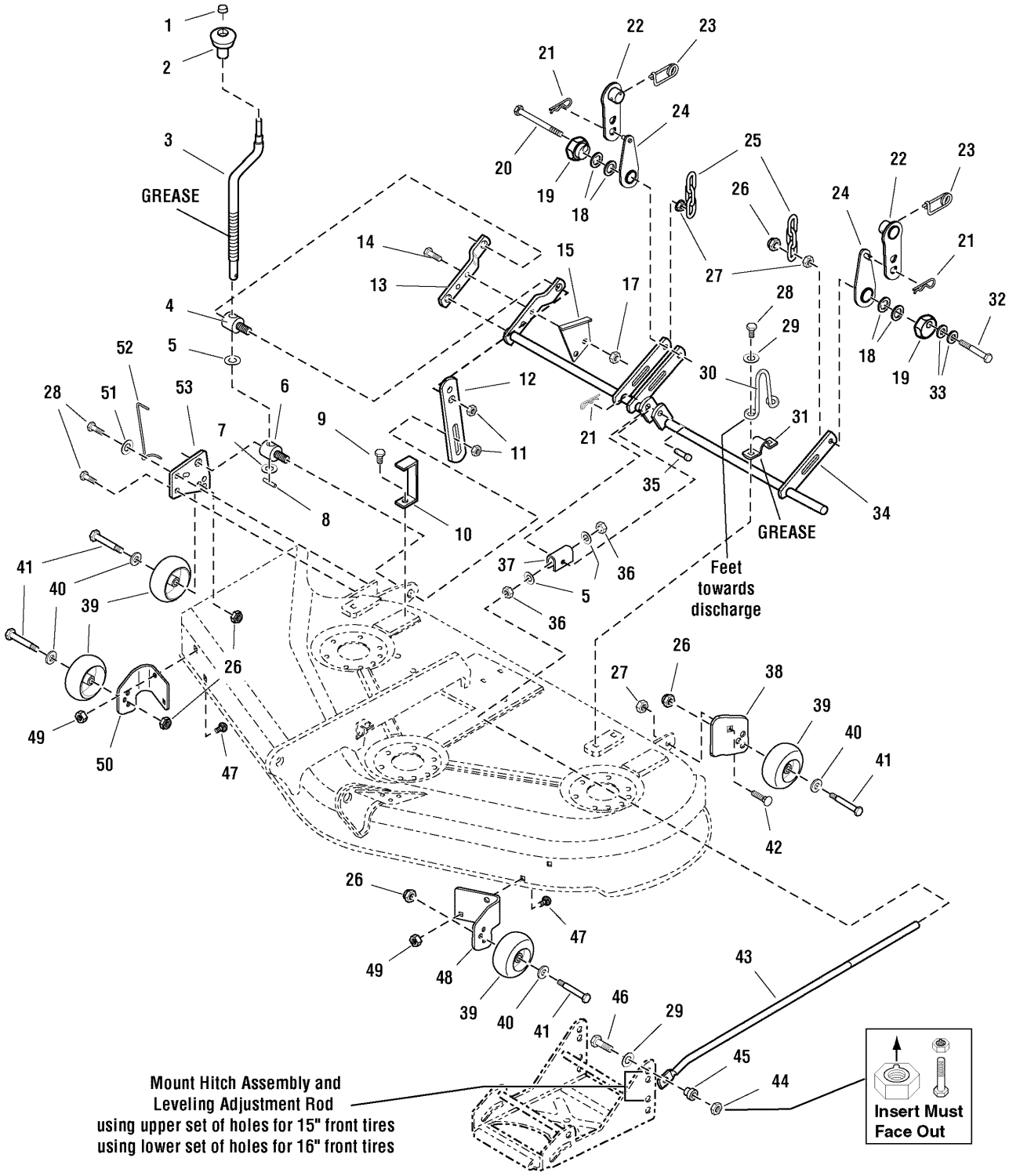
GREASE
GREASE
Feet towards discharge
Mount Hitch Assembly and Leveling Adjustment Rod using upper set of holes for 15" front tires using lower set of holes for 16" front tires
Insert Must Face Out

44" Mower Deck - Height Adjustment

Item	Part No	Qty	Description
39	1714760	4	WHEEL, 2 Wide
40	1960170	4	WASHER, 1/2
41	2108765	4	BOLT, Wheel, 3/8-16 x 2-25/32
42	1931350	1	CARRIAGE BOLT, 3/8-16 x 1 G5
43	1704093	1	ROD, Adjustment, 28 Long
44	2860681	1	NUT, Hex Toplock Spiral Flange 3/8-16
45	1706644	1	SPACER
46	1922606	1	CAPSCREW, Hex Head, 3/8-16 x 1-3/4 G8
47	1931334	4	CARRIAGE BOLT, 5/16-18 x 7/8 G5
48	1719852A	1	BRACKET, Wheel Guage LH
49	1927557	4	NUT, Hex Flange Whiz Liock Large, 5/16-18
50	1719853A	1	BRACKET, Wheel Guage RH
51	1919381	1	WASHER, 5/16
52	1704114	1	ROD, Indicator, 6-5/16 Long
53	1727134A	1	SUPPORT, Plate

Footnotes:

NOTE: This group applies to all models except Model YT2344 (2690754)

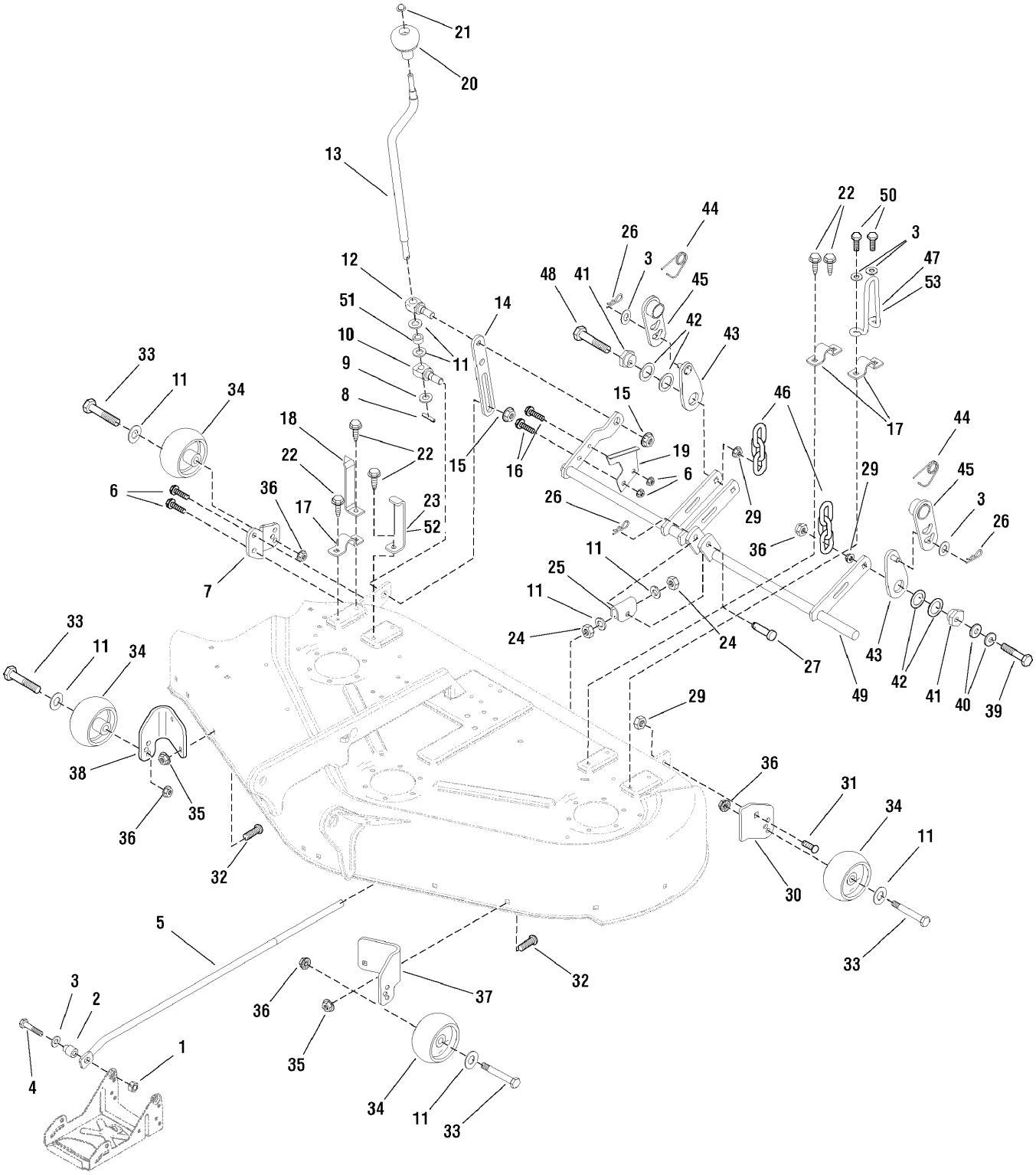
21
20
13
12
51
10
9
8
11
14
15
16
18
22
22
23
52
17
36
6
7
33
11
34
26
3
44
48
41
45
42
43
15
19
6
29
46
22
50
3
47
53
17
44
45
3
26
29
36
26
11
25
11
24
24
27
43
42
41
40
39
49
29
33
11
34
38
35
36
32
36
31
34
11
30
33
5
3
2
4
1
36
37
32
35
34
11
33

44" Mower Deck - Height Adjustment

Item	Part No	Qty	Description
1	2860681	1	NUT, Locknut, 3/8-16
2	1706644	1	SPACER, 3/8 x 3/4 x 15/16
3	1924940	5	WASHER. 3/8
4	1922606	1	CAPSCREW, Hex 3/8-16 x 1 3/4
5	1704093	1	ROD, Adjustment
6	1927187	2	SCREW, Hex Tapit 3/8-16 x 1
7	1734771A	1	SUPPORT, Wheel
8	2816001	1	PIN, Roll
9	1704097	1	WASHER, Detent
10	1733257	1	TRUNNION
11	1960170	8	WASHER, 1/2
12	1733258	1	TRUNNION, Threaded
13	1719901	1	CRANK, Height of Cut
14	1727143A	1	STOP, Height
15	1930644	2	NUT, Hex Flange Lock 1/2-13
16	1930591	2	SCREW, Hex Whizlock,Flange 5/16-18 x 3/4
17	1665374	3	STRAP
18	1720643A	1	INDICATOR, Height of Cut
19	1704116A	1	BRACKET, Height of Cut
20	1714084	1	KNOB
21	1960093	1	NUT, PUSH PAL
22	1664847	5	SCREW, Taptite, 5/16-18 x 3/4
23	1722748A	1	BRACKET, Upstop
24	1913744	2	NUT, Hex Jam, 1/2-13
25	1704081A	1	TRUNNION
26	1960074	3	CLIP, Hairpin
27	2118053	1	PIN, Clevis
29	1931211	3	NUT, Flange Whiz, 3/8-16
30	1727135A	1	SUPPORT, Gauge Wheel
31	1931350	1	BOLT, Carriage, 3/8- 16 x 1
32	1931334	4	BOLT, Carriage, 5/16-18 x 7/8
33	2108765	4	BOLT, Wheel, 3/8-16 x 2.781
34	1714760	4	WHEEL
35	1927557	4	NUT, Hex Whiz Lock, 5/16-18
36	1960687	5	NUT, Hex Nylock, 3/8-16
37	1719852A	1	BRACKET, Wheel Gauge

Footnotes:

NOTE: This group applies to Model YT2344 (2690754)

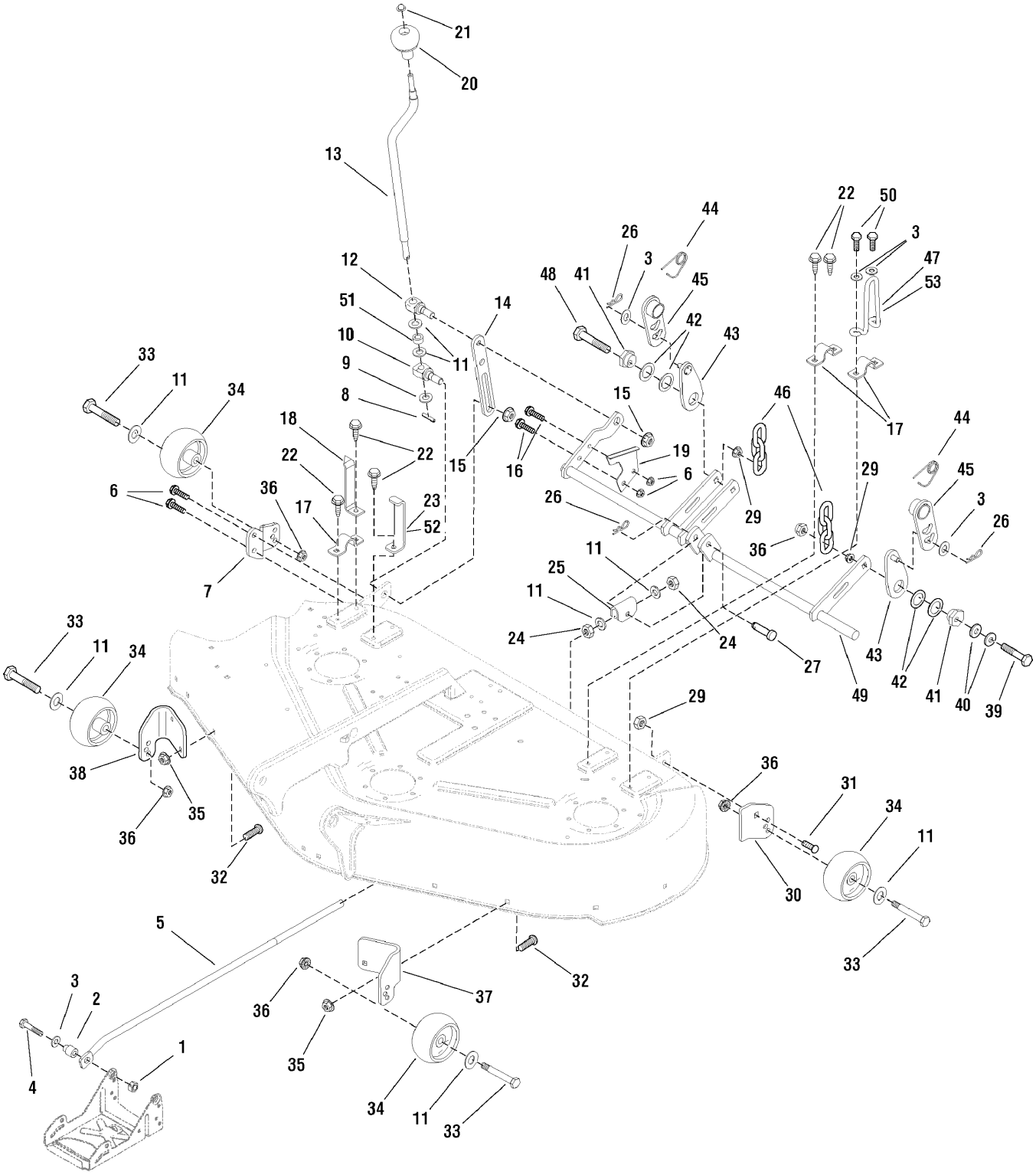
21
20
13
12
51
10
9
8
11
14
15
16
18
22
22
23
52
17
36
6
7
33
11
34
26
3
44
48
41
45
42
43
15
19
6
26
29
46
22
50
3
47
53
17
44
45
3
26
29
36
11
25
11
24
24
27
43
42
41
40
39
49
29
33
11
34
38
35
36
32
36
31
34
11
30
33
5
3
2
4
1
36
37
32
35
34
11
33

44" Mower Deck - Height Adjustment

Item	Part No	Qty	Description
38	1719853A	1	BRACKET, Gauge Wheel
39	1922130	1	CAPSCREW, 3/8-16 x 2 1/4
40	1922755	2	WASHER, 3/8
41	1704082	2	NUT, Adjuster
42	2860208	4	WASHER
43	1727356A	2	HANGER
44	2176012	2	PIN, Safety
45	1727361A	2	HANGER ASSEM, Upper
46	1707514A	2	CHAIN, 3 Link
47	1722747	1	UPSTOP, Wire 6-1/4
48	1913709	1	CAPSCREW, 3/8-16 x 3
49	1727138A	1	ARM ASSEM, Mower 44"
50	1931202	2	SCREW, Taptite, 5/16-18 x 1 1/4
51	1716953	1	SPACER
52	1722750A	1	BRACKET, Upstop
53	1720659	1	UPSTOP,Wire 5-1/4

Footnotes:

NOTE: This group applies to Model YT2344 (2690754)

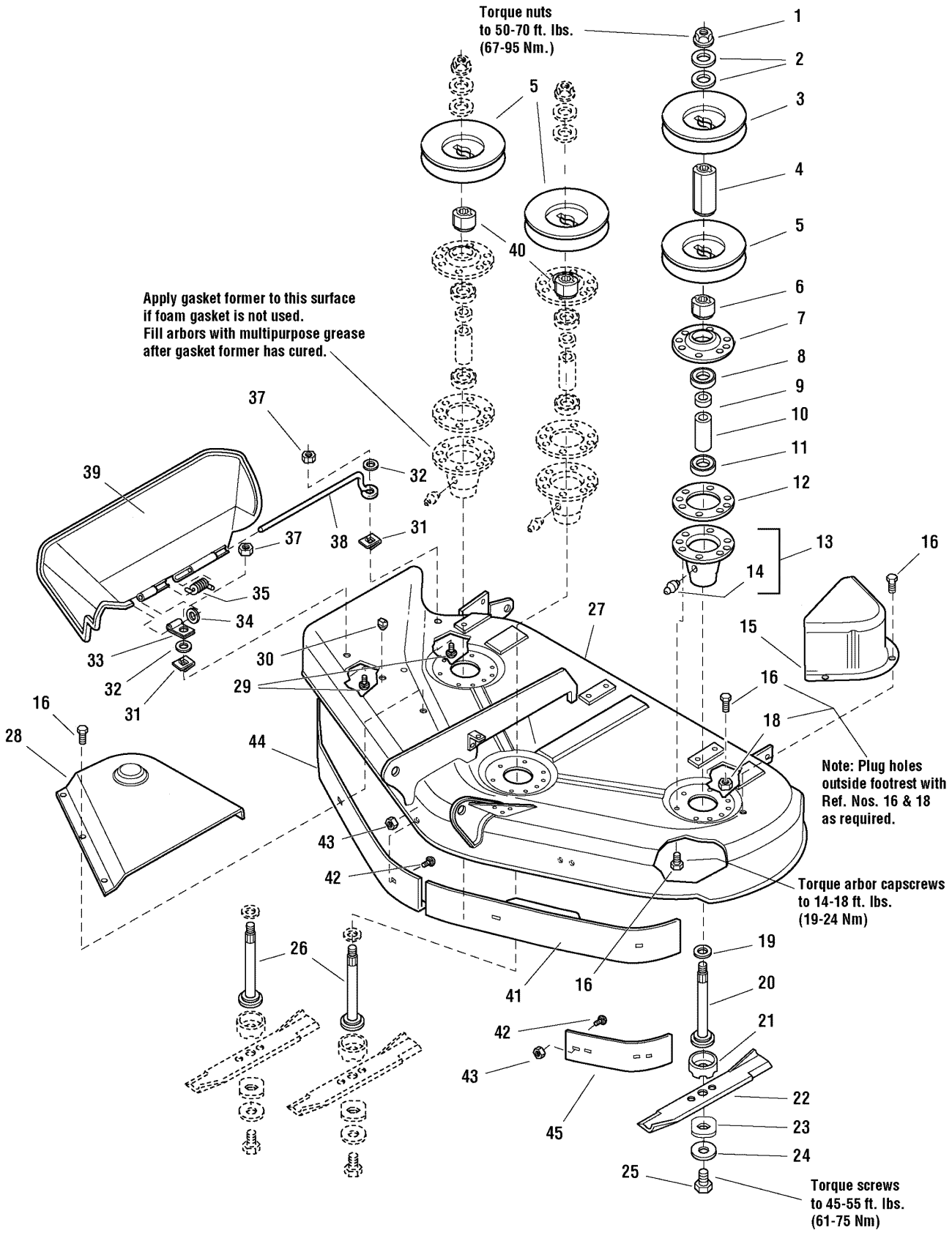
Torque nuts
to 50-70 ft. lbs.
(67-95 Nm.)
Apply gasket former to this surface
if foam gasket is not used.
Fill arbors with multipurpose grease
after gasket former has cured.
Note: Plug holes
outside footrest with
Ref. Nos. 16 & 18
as required.
Torque arbor capscrews
to 14-18 ft. lbs.
(19-24 Nm)
Torque screws
to 45-55 ft. lbs.
(61-75 Nm)
1
2
3
4
5
6
7
8
9
10
11
12
13
14
15
16
18
19
20
21
22
23
24
25
26
27
28
29
30
31
32
33
34
35
37
38
39
40
41
42
43
44
45

44" Mower Deck - Housing, Arbors & Blades

Item	Part No	Qty	Description
1	1714419	3	NUT, Hex Flange, 9/16-18
2	1713675	6	WASHER, Bellevilled, 9/16
3	1713161	1	PULLEY, 4-1/2 O.D.
3	1713091	1	PULLEY, 5 O.D.
4	1713158	1	HUB, Double Pulley
5	1713098	3	PULLEY
6	1713533	1	HUB, Double Pulley
7	1655729A	3	COVER, Arbor Housing
8	2108202	3	BEARING, Ball, 3/4 x 1-3/4 x 5/8
9	1715724	3	SPACER, 21/32 x 3/4 x 5/8
10	1732544	3	SPACER, 11/16 x 5/32 x 2-11/16
11	1705897	3	BEARING, Ball, 11/16 x 1-9/16 x 15/32
12	1707335	3	GASKET, Foam
13	1713338A	3	HOUSING ASSEMBLY, Arbor Bottom, w/Lube Fitting (Includes Ref. No. 14)
14	1704314	3	FITTING, Grease
15	1720560A	1	COVER, Arbor
15	1732200A	1	COVER, Arbor without Ribs
16	1664847	29	CAPSCREW, Hex Head Taptite, 5/16-18 x 3/4
18	1931277	1	NUT, Hex Flange, 5/16,
19	1713619	3	WASHER, Bellevilled, 9/16, Black
20	1713612	1	SHAFT, Arbor (LH)
21	1713196	3	SHIELD, Grass, Lower
22	1704100A	3	BLADE, Mower, 16-1/8
23	1713089	3	WASHER, Hex, 11/16 x 2
24	1656916	3	WASHER, Spring 15/32, Black
25	2823471	3	CAPSCREW, Hex Head, 7/16-14 x 1
26	1713195	2	SHAFT, Arbor (Center & RH)
27	1687154	1	MOWER HOUSING ASSEMBLY, 44" Mower (Red)
28	1715673	1	COVER, Arbor
29	1931318	2	CARRIAGE BOLT, 1/4-20 x 7/8
30	1705115	1	PLUG, Hole
31	1960518	2	NUT, Push
32	1960353	2	WASHER, 1/4, Black
33	1704873	1	CLAMP
34	1919326	1	WASHER, 5/16, Black
35	7101082	1	SPRING

Footnotes:

NOTE: This group applies to all models except Model YT2344 (2690754)

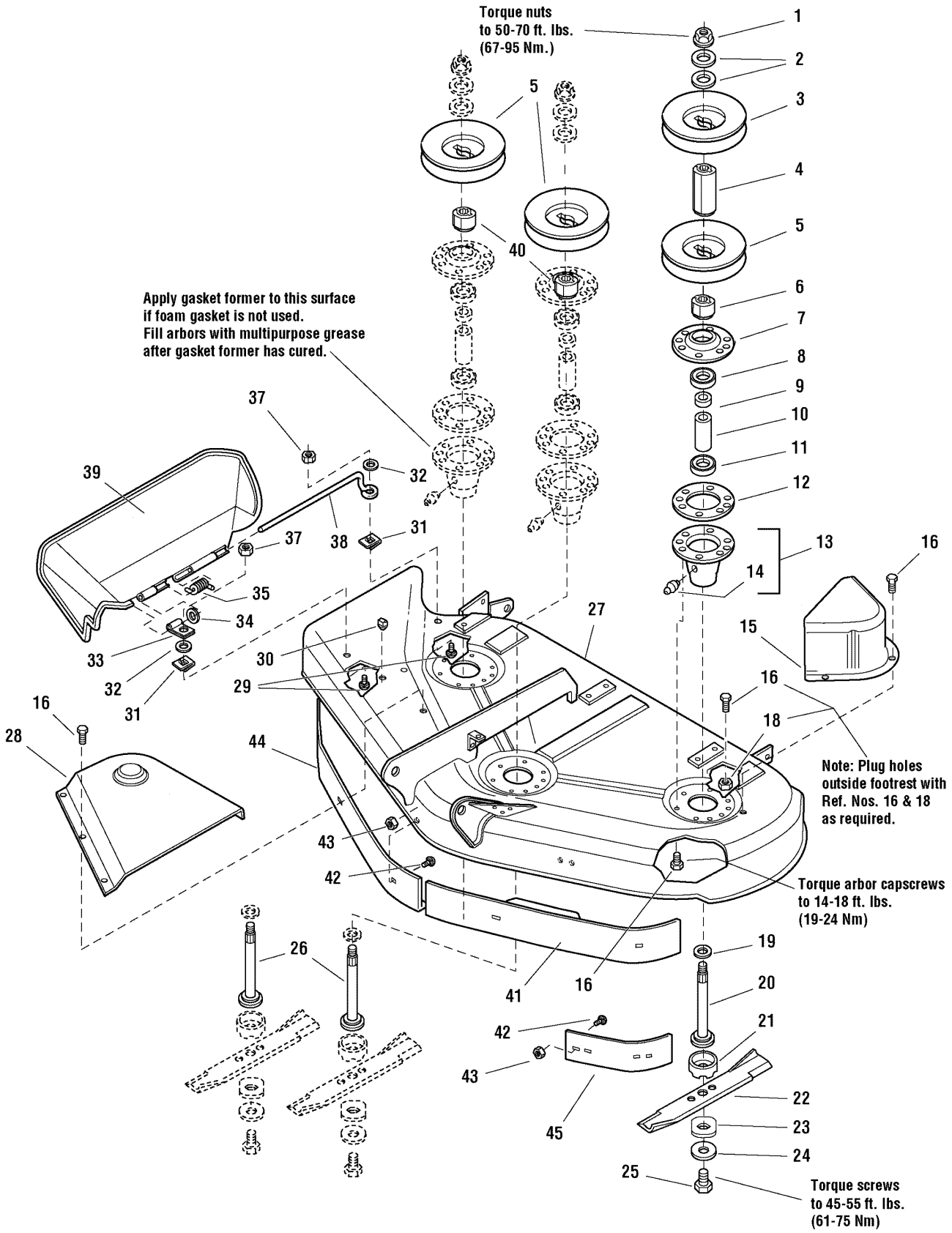
Torque nuts
to 50-70 ft. lbs.
(67-95 Nm.)
Apply gasket former to this surface
if foam gasket is not used.
Fill arbors with multipurpose grease
after gasket former has cured.
Note: Plug holes
outside footrest with
Ref. Nos. 16 & 18
as required.
Torque arbor capscrews
to 14-18 ft. lbs.
(19-24 Nm)
Torque screws
to 45-55 ft. lbs.
(61-75 Nm)
1
2
3
4
5
6
7
8
9
10
11
12
13
14
15
16
18
19
20
21
22
23
24
25
26
27
28
29
30
31
32
33
34
35
37
38
39
40
41
42
43
44
45

Item	Part No	Qty	Description
37	1920397	2	NUT, ESNA 1/4-20
38	1706709	1	ROD, Deflector, Front
39	1705449	1	DEFLECTOR, Plastic
40	1713197	2	HUB, Pulley, Center & RH
41	1716879A	1	BAFFLE, Anti-Blowout, LH (CE/Export)
42	1931333	2/8/11	CARRIAGE BOLT, 5/16-18 x 3/4, Black (CE/Export)
43	1927557	2/8/11	NUT, Hex Flange Whiz Lock, 5/16-18, Black (CE/Export)
44	1716878A	1	BAFFLE, Anti-Blowout, RH (CE/Export)
45	1724538A	1	BAFFLE, Blowout, 44" & 50"

Footnotes:

NOTE: This group applies to all models except Model YT2344 (2690754)

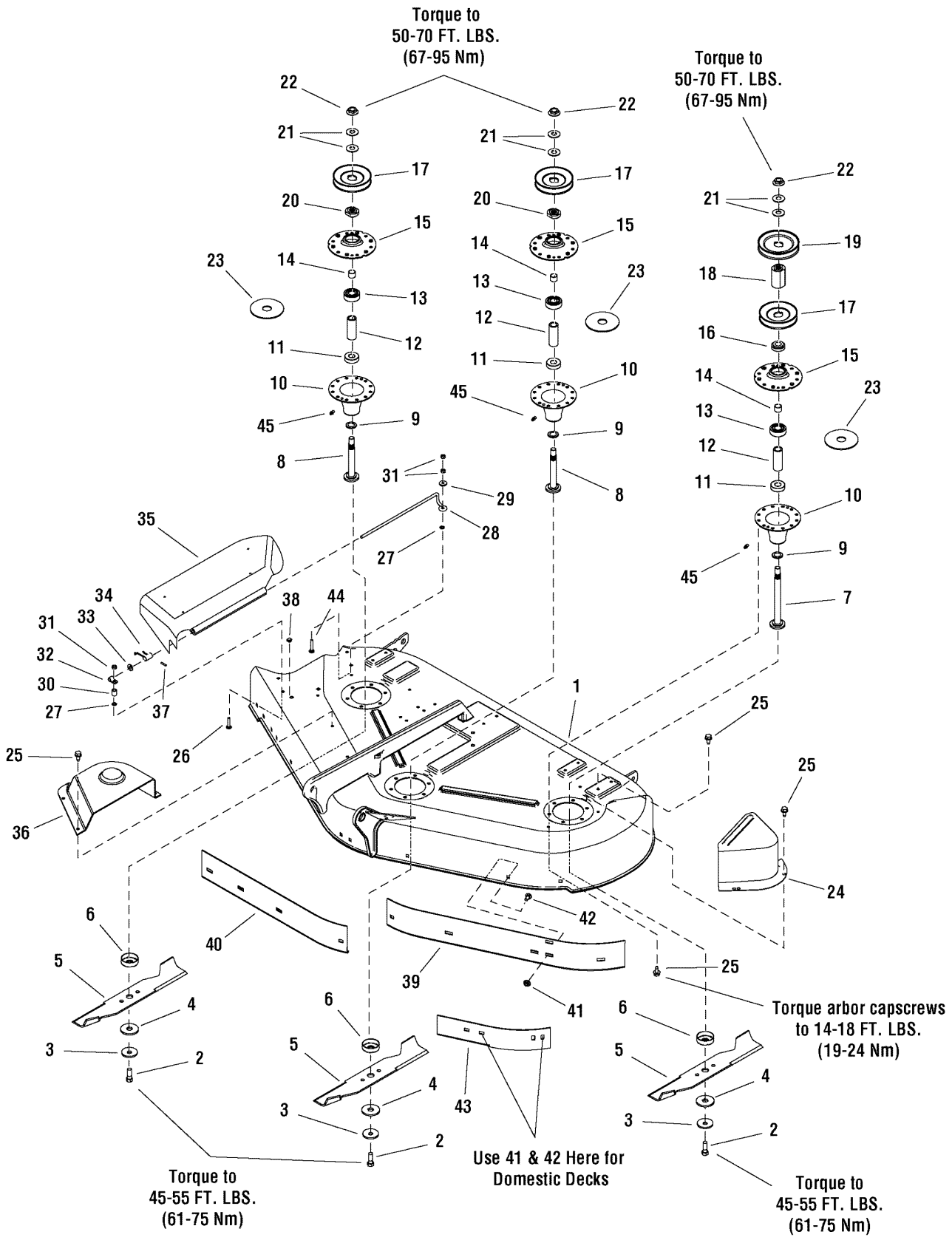
Torque to
50-70 FT. LBS.
(67-95 Nm)
Torque to
50-70 FT. LBS.
(67-95 Nm)
Torque arbor capscrews
to 14-18 FT. LBS.
(19-24 Nm)
Torque to
45-55 FT. LBS.
(61-75 Nm)
Use 41 & 42 Here for
Domestic Decks
Torque to
45-55 FT. LBS.
(61-75 Nm)

44" Mower Deck - Housing, Arbors & Blades

Item	Part No	Qty	Description
1	1734753D	1	HOUSING ASSEM, 44"
2	2823471	3	CAPSCREW, Hex, 7/16-14 x 1-1/4
3	1656916	3	WASHER, Spring
4	1713089	3	WASHER, Hex
5	1704100	3	BLADE, Mower,44"
6	1713196	3	SHIELD, Grass Lower Arbor
7	1713612	1	SHAFT, Arbor
8	1713195	2	SHAFT, Arbor
9	1713619	3	WASHER
10	1713338A	3	HOUSING, Arbor Bottom
11	1705897	3	BEARING, Ball
12	1732544	3	SPACER
13	2108202	3	BEARING, Ball
14	1715724	3	SPACER, Bearing Sleeve
15	1655729A	3	HOUSING, Top Arbor
16	1713533	1	HUB, Pulley Double
17	1713098	3	PULLEY
18	1713158	1	HUB, Pulley Double
19	1713091	1	PULLEY
20	1713197	2	HUB, Pulley
21	1713675	6	WASHER, Belleville
22	1714419	3	NUT, Hex Flange 9/16-18
23	1707335	3	GASKET, Foam
24	1732200A	1	COVER, Arbor
25	1664847	28	SCREW, Hex Washer Taptite 5/16-18 x 3/4
26	1960633	2	BOLT, Carriage, 1/4-20 x 1-1/2
27	1960518	2	NUT, Push
28	1706709	1	ROD, Deflector
29	1960353	1	WASHER
30	1710703	1	SPACER
31	1920397	3	NUT, Hex Lock ESNA Lite, 1/4-20
32	1704873	1	CLAMP
33	1919326	1	WASHER, Plain
34	7101082	1	SPRING
35	1705449	1	DEFLECTOR
36	1715673	1	COVER, Arbor
37	1931277	1	NUT, Hex Flange, 5/16-18

Footnotes:

NOTE: This group applies to Model YT2344 (2690754)

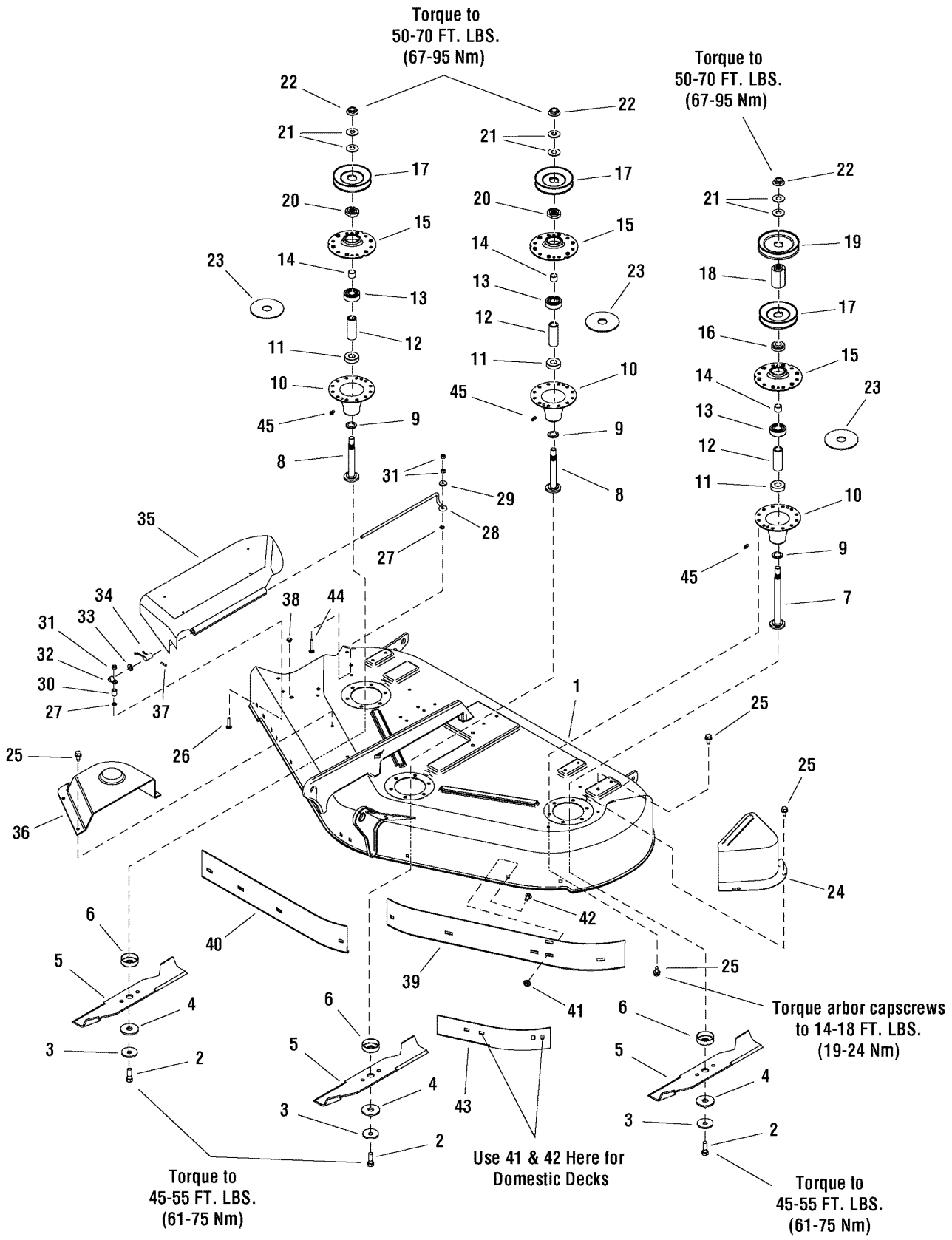
Torque to
50-70 FT. LBS.
(67-95 Nm)
Torque to
50-70 FT. LBS.
(67-95 Nm)
Torque arbor capscrews
to 14-18 FT. LBS.
(19-24 Nm)
Torque to
45-55 FT. LBS.
(61-75 Nm)
Use 41 & 42 Here for
Domestic Decks
Torque to
45-55 FT. LBS.
(61-75 Nm)

44" Mower Deck - Housing, Arbors & Blades

Item	Part No	Qty	Description
38	1705115	1	PLUG, Hole
39	1716879A	1	Baffle, Blowout, 44", LH
40	1734196A	1	Baffle, Blowout, 44", RH
41	1927557	11	Nut, Whiz Lock, 5/16-18
42	1931333	11	Bolt, Carriage, 5/16-18 x 3/4
43	1724538A	1	BAFFLE, Blowout 44" & 50"
44	1960633	1	Bolt, Carriage, 1/4-20 x 1-1/2
45	1713198	3	FITTING, Grease

Footnotes:

NOTE: This group applies to Model YT2344 (2690754)

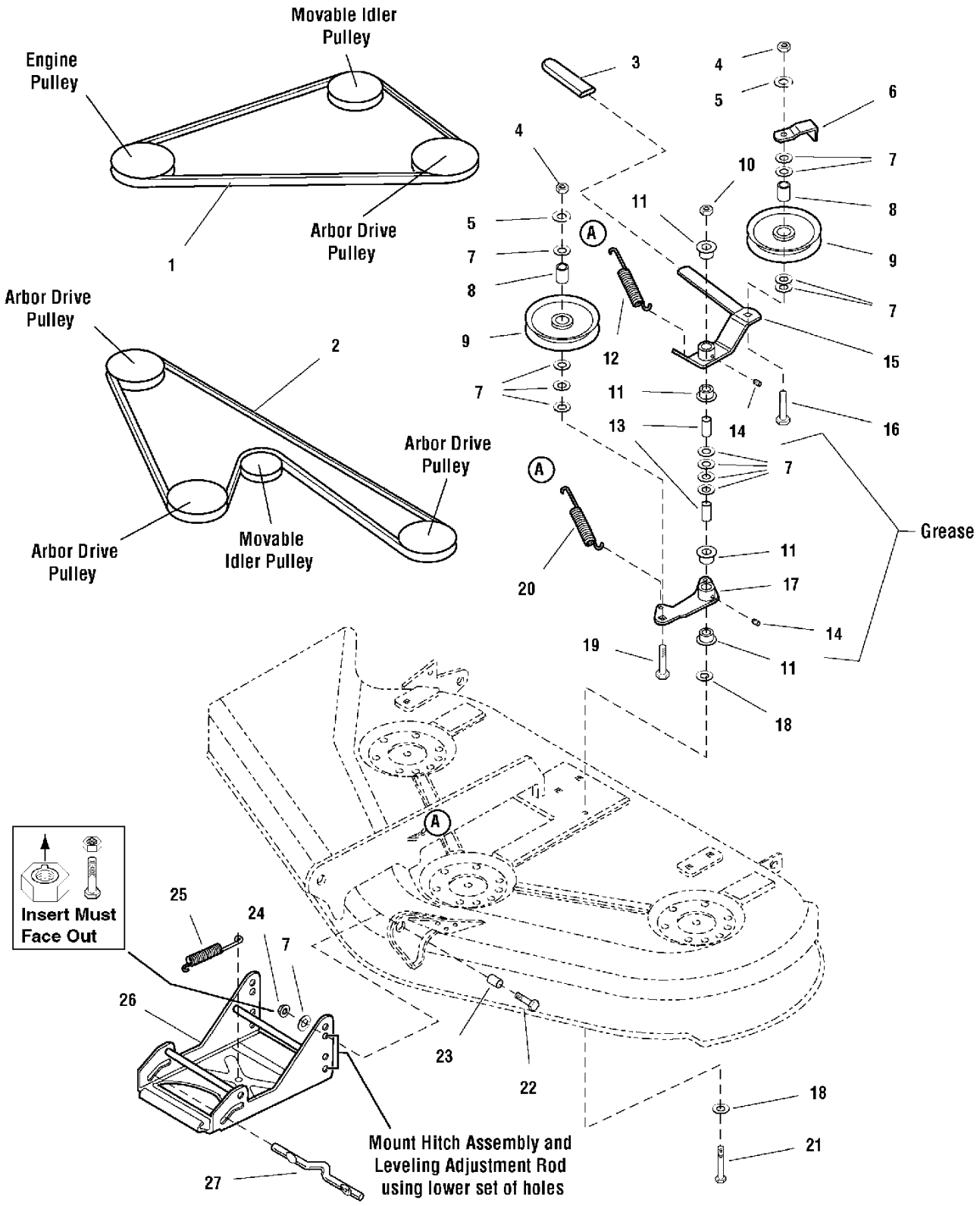
Movable Idler Pulley
Engine Pulley
Arbor Drive Pulley
1
Arbor Drive Pulley
2
Arbor Drive Pulley
Movable Idler Pulley
Arbor Drive Pulley
3
4
5
6
7
8
9
10
11
12
13
14
15
16
17
18
19
20
A
Grease
Insert Must Face Out
21
22
23
24
25
26
27
Mount Hitch Assembly and Leveling Adjustment Rod using lower set of holes

50" Mower Deck - Clutch & Support Group

Item	Part No	Qty	Description
1	1707740	1	V-BELT, Mower Drive
2	1703836	1	V-BELT, Arbor Drive
3	1665835	1	GRIP, Lever
4	3031009	2	NUT, Hex, 3/8-16 Was 1916950
5	3031008	2	WASHER, Lock, 3/8 Was 1916965
6	1677135A	1	BELT STOP, Idler
7	7090122	14	WASHER, 3/8 Was 1924940
8	1716553	1	HUB, 25/64 x 3/4 x 63/64, Powder Metal
9	1685150	2	PULLEY, Idler (Includes Ref. No. 8)
10	3031355	1	NUT, Hex Flange, 3/8-16, MAC Lock Large, Black Was 1960339
11	1676148	4	BUSHING, 5/8 x 3/4 x 13/32, Powder Metal
12	1715435	1	SPRING
13	1674669	2	SPACER, 25/64 x 5/8 x 1-1/8, Case Hardened
14	2912808	2	GREASE FITTING
15	1704658	1	LEVER ASSEMBLY, Idler (Includes Ref. Nos. 11 & 14)
16	1960315	1	CARRIAGE BOLT, 3/8-16 x 2
17	1718561	1	LEVER ASSEMBLY, Idler Arm (Includes Ref. Nos. 11 & 14)
18	1924356	2	WASHER, 3/8, Black
19	1931352	1	CARRIAGE BOLT, 3/8-16 x 1-1/2
20	1656936	1	SPRING
21	1923938	1	CAPSCREW, Hex Head, 3/8-16 x 3-1/2
22	1921968	2	CAPSCREW, Hex Head, 3/8-16 x 1-3/8
23	2157081	2	SPACER, 3/8 x 3/4 x 1/2
24	7960641	2	NUT, Hex Aluminum Insert Lock, 3/8-16
25	2156302	1	SPRING
26	1707432A	1	HITCH ASSEMBLY
27	1715759	1	ROD, Latch

Footnotes:

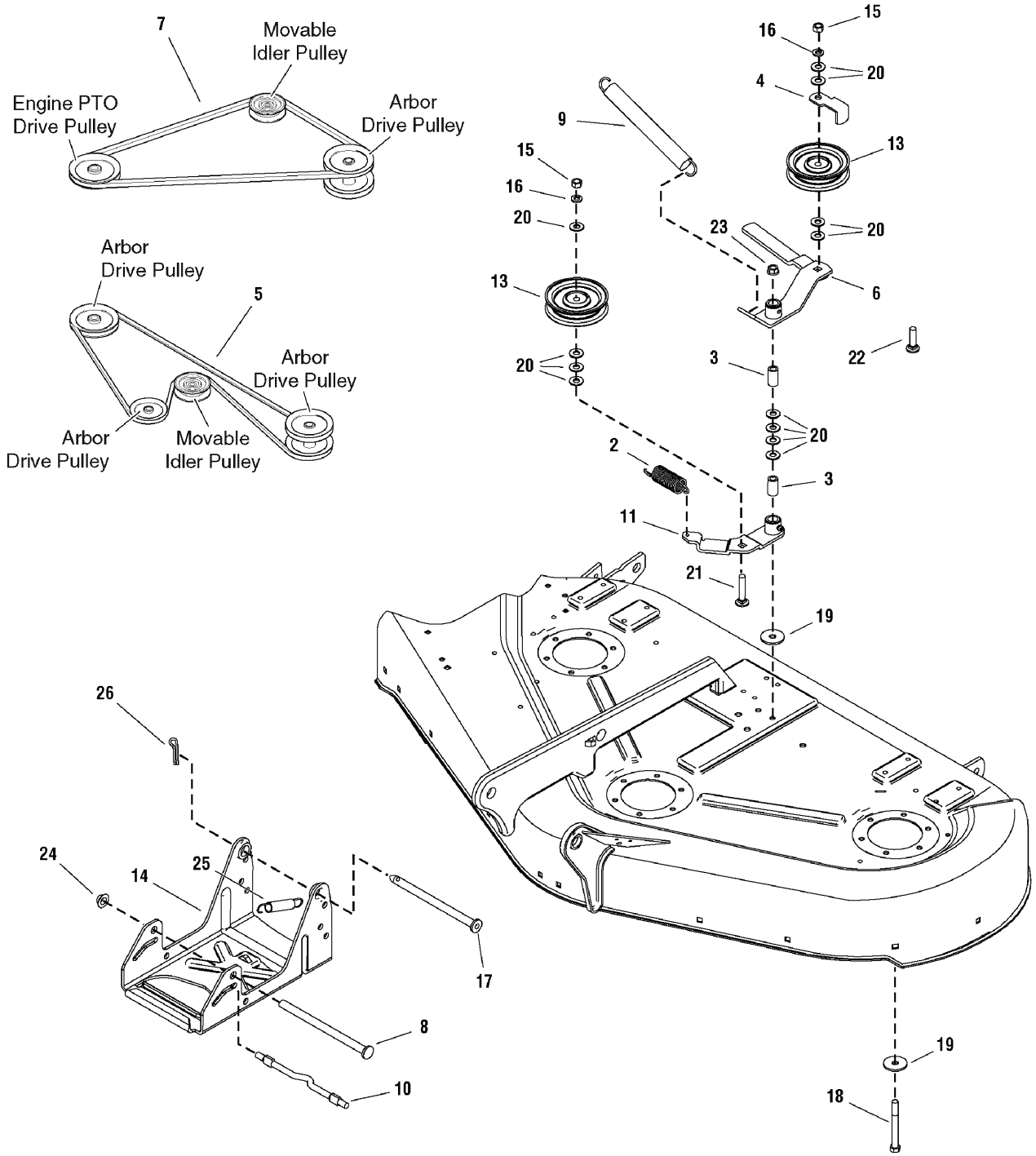
7
Movable
Idler Pulley
Engine PTO
Drive Pulley
Arbor
Drive Pulley
Arbor
Drive Pulley
5
Arbor
Drive Pulley
Arbor
Drive Pulley
Movable
Idler Pulley
15
16
20
4
9
13
15
16
20
23
20
13
6
22
20
3
20
2
3
11
21
19
26
24
14
25
17
8
10
19
18

50" Mower Deck - Clutch & Support Group

Item	Part No	Qty	Description
2	1656936	1	SPRING, Extension
3	1674669	2	SPACER, Case Hard
4	1677135A	1	GUARD, Belt
5	1703836	1	V BELT, Arbor Drive 50
6	1704658	1	LEVER ASSEMBLY, Idler w/Bushings & Fitting
7	1707740	1	V BELT, Mower Drive 50
8	1713578	1	ROD
9	1715435	1	SPRING, Extension
10	1715759	1	ROD
11	1718561	1	LEVER ASSEMBLY, Idler w/Bushings & Fitting
13	1724387	2	PULLEY, Idler
14	1733717A	1	HITCH, Mower 44, 50"
15	1916950	2	NUT, Hex 3/8-16 NC-2B
16	1916965	2	LOCKWASHER, Spring 3/8
17	1734011	2	CAPSCREW, Hex Head 3/8-16 x 1-3/4 G8
18	1923938	1	CAPSCREW, Hex Head 3/8-16 x 3-1/2 G5
19	1924356	2	WASHER, 3/8
20	1924940	12	WASHER, 3/8
21	1931352	1	CARRIAGE BOLT, 3/8-16 x 1-1/2 G5
22	1960315	1	CARRIAGE BOLT, 3/8-16 x 2 G5
23	1960339	1	NUT, Hex Flange 3/8-16 Machine Lock
24	1960519	1	NUT, Push
25	2156302	1	SPRING, Extension
26	1709189	1	PIN, Click

Footnotes:

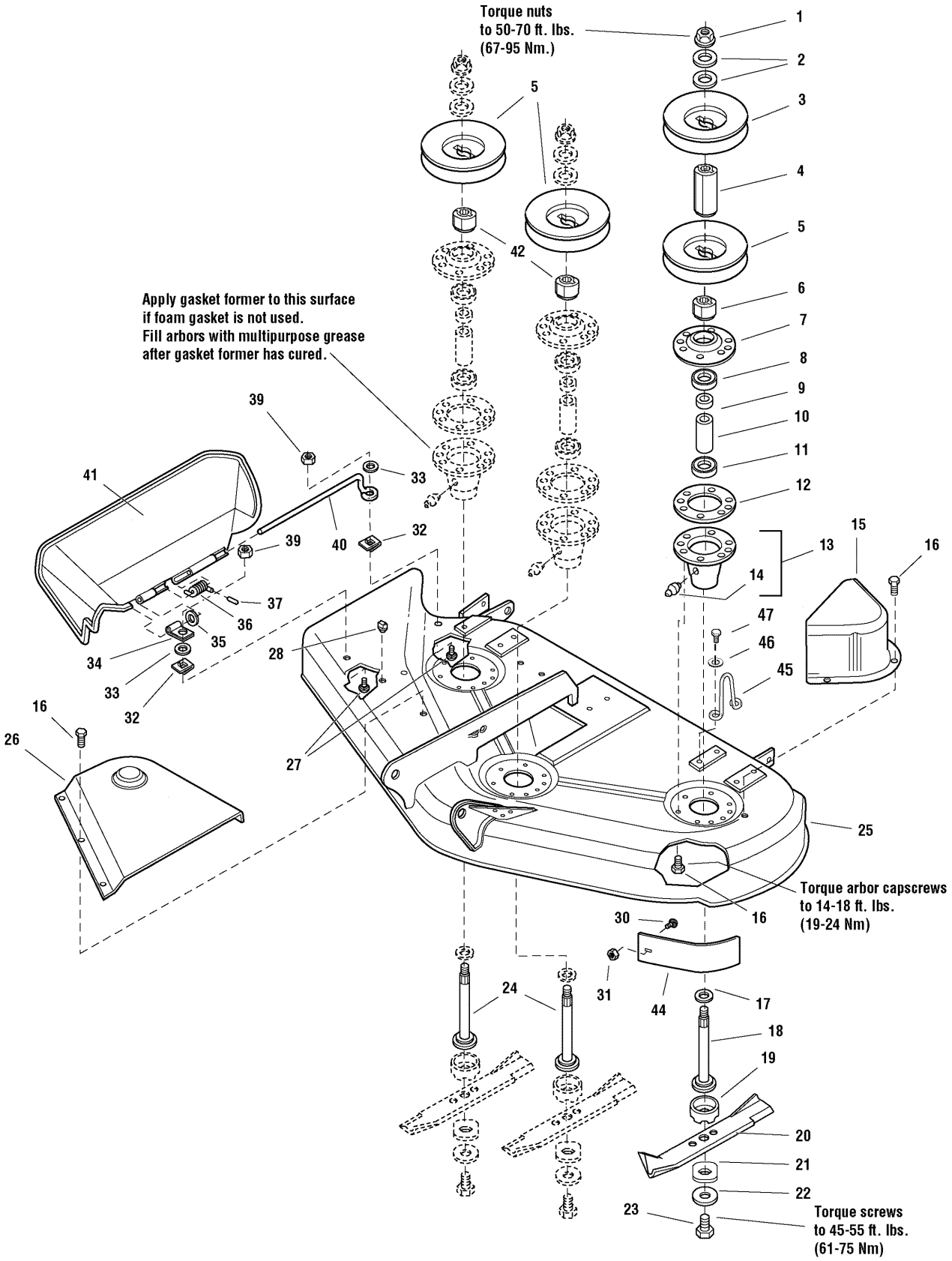
Torque nuts
to 50-70 ft. lbs.
(67-95 Nm.)
Apply gasket former to this surface
if foam gasket is not used.
Fill arbors with multipurpose grease
after gasket former has cured.
Torque arbor capscrews
to 14-18 ft. lbs.
(19-24 Nm)
Torque screws
to 45-55 ft. lbs.
(61-75 Nm)
1
2
3
4
5
6
7
8
9
10
11
12
13
14
15
16
17
18
19
20
21
22
23
24
25
26
27
28
30
31
32
33
34
35
36
37
39
40
41
42
44
45
46
47

50" Mower Deck - Housing, Arbors & Blades

Item	Part No	Qty	Description
1	1714419	3	NUT, Hex Flange, 9/16-18
2	1713675	6	WASHER, Bellevilled, 9/16
3	1713161	1	PULLEY
4	1713158	1	HUB, Double Pulley
5	1713098	3	PULLEY
6	1713533	1	HUB, Double Pulley
7	1655729A	3	COVER, Arbor Housing
8	2108202	3	BEARING, Ball, 3/4 x 1-3/4 x 5/8
9	1715724	3	SPACER, 21/32 x 3/4 x 5/8
10	1732544	3	SPACER, 11/16 x 5/32 x 2-11/16
11	1705897	3	BEARING, Ball, 11/16 x 1-9/16 x 15/32
12	1707335	3	GASKET, Foam
13	1713338A	3	HOUSING ASSEMBLY, Arbor Bottom, w/Lube Fitting (Includes Ref. No. 14)
14	1704314	3	FITTING, Grease
15	1720560A	1	COVER, Arbor
16	1664847	27	CAPSCREW, Hex Head Taptite, 5/16-18 x 3/4
17	1713619	3	WASHER, Bellevilled, 9/16, Black
18	1713612	1	SHAFT, Arbor (LH)
19	1713196	3	SHIELD, Grass, Lower
20	1708229A	3	BLADE, Mower, 18-1/8
21	1713089	3	WASHER, Hex, 11/16 x 2
22	1656916	3	WASHER, Spring 15/32, Black
23	2823471	3	CAPSCREW, Hex Head, 7/16-14 x 1
24	1713195	2	SHAFT, Arbor (Center & RH)
25	1722746D	1	MOWER HOUSING ASSEMBLY, 50" Mower
26	1715673	1	COVER, Arbor
27	1931318	2	CARRIAGE BOLT, 1/4-20 x 7/8
28	1705115	1	PLUG, Hole
30	1931333	2	CARRIAGE BOLT, 5/16-18 x 3/4
31	1927557	2	NUT, Hex, Whizlock, 5/16-18
32	1960518	2	NUT, Push
33	1960353	2	WASHER, 1/4, Black
34	1704873	1	CLAMP
35	1919326	1	WASHER, 5/16, Black
36	7101082	1	SPRING
37	1723323	1	CAP, Spring End

Footnotes:

NOTE: This group applies to all models except Models YT2350 (2690806) and YT2350 (2690752)

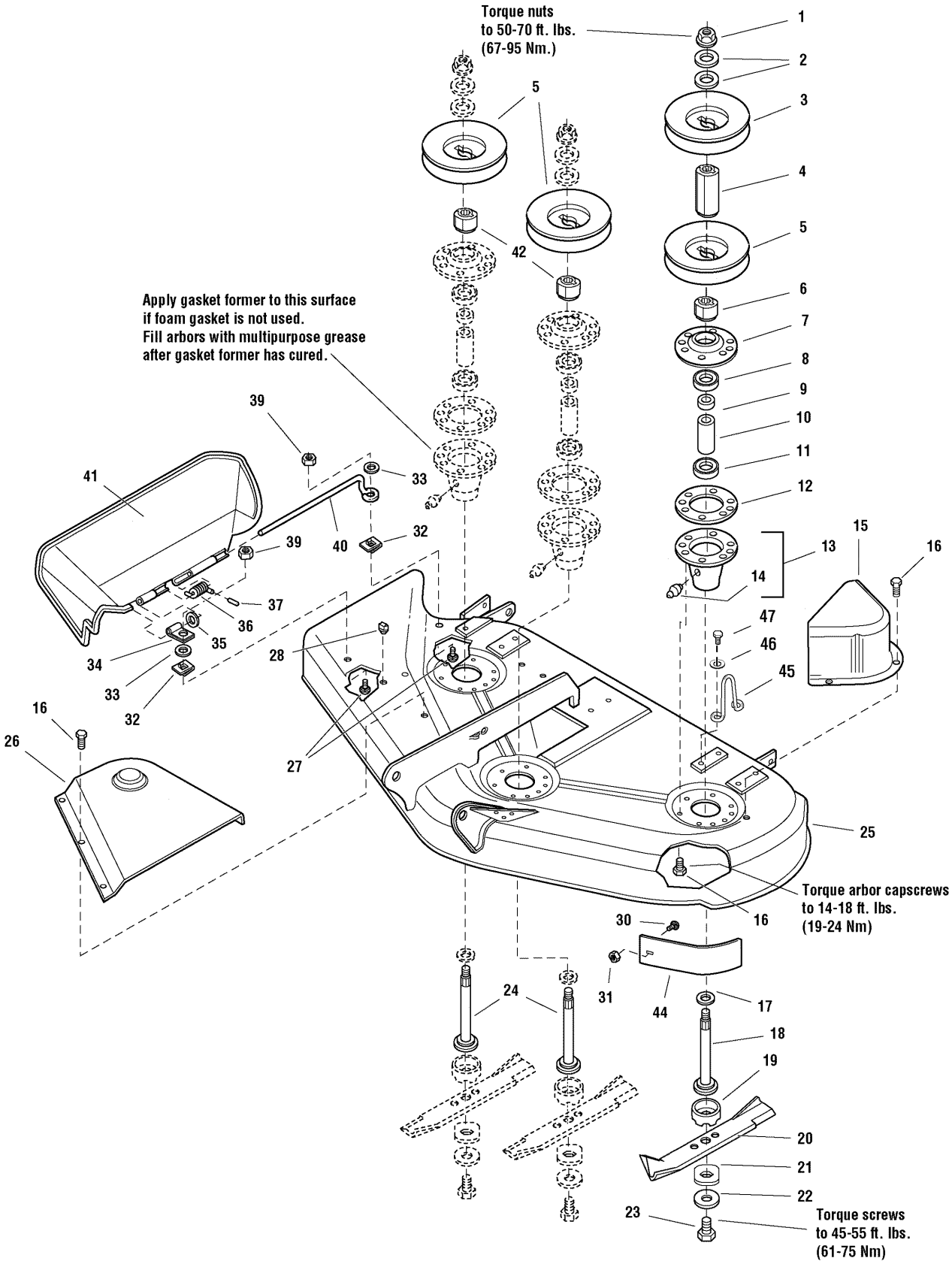
Torque nuts
to 50-70 ft. lbs.
(67-95 Nm.)
Apply gasket former to this surface
if foam gasket is not used.
Fill arbors with multipurpose grease
after gasket former has cured.
Torque arbor capscrews
to 14-18 ft. lbs.
(19-24 Nm)
Torque screws
to 45-55 ft. lbs.
(61-75 Nm)
1
2
3
4
5
6
7
8
9
10
11
12
13
14
15
16
17
18
19
20
21
22
23
24
25
26
27
28
30
31
32
33
34
35
36
37
39
40
41
42
44
45
46
47

Item	Part No	Qty	Description
39	1920397	2	NUT, Hex, 1/4-20 ESNA
40	1706709	1	ROD, Deflector, Front
41	1705449	1	DEFLECTOR, Plastic
42	1713197	2	HUB, Pulley, Center & RH
44	1724538A	1	BAFFLE, Anit-Blowout
45	1719929	1	UPSTOP
46	1924940	2	WASHER
47	1960541	1	CAPSCREW, Taptite 5/16-18 x 3/4

Footnotes:

NOTE: This group applies to all models except Models YT2350 (2690806) and YT2350 (2690752)

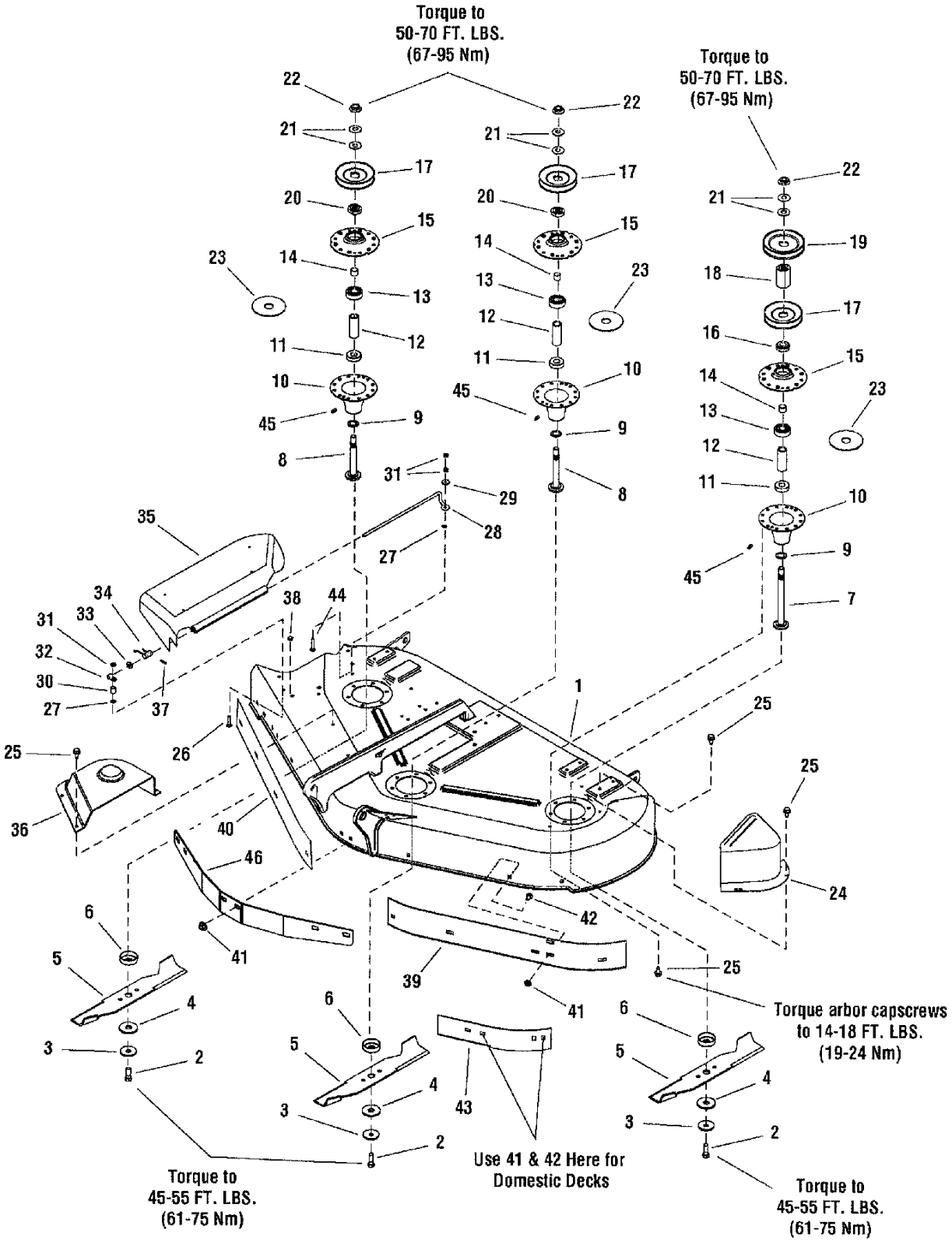
Torque to
50-70 FT. LBS.
(67-95 Nm)
Torque to
50-70 FT. LBS.
(67-95 Nm)
Torque arbor capscrews
to 14-18 FT. LBS.
(19-24 Nm)
Torque to
45-55 FT. LBS.
(61-75 Nm)
Use 41 & 42 Here for
Domestic Decks
Torque to
45-55 FT. LBS.
(61-75 Nm)

50" Mower Deck - Housing, Arbors & Blades

Item	Part No	Qty	Description
1	1734785D	1	HOUSING ASSY, 50"
2	2823471	3	CAPSCREW, Hex 7/16-14 x 1-1/4
3	1656916	3	WASHER, Spring
4	1713089	3	WASHER, Hex, 11/16 x 2
5	1708229	3	BLADE, Mower
6	1713196	3	SHIELD, Grass Lower Arbor
7	1713612	1	SHAFT, Arbor
8	1713195	2	SHAFT, Arbor
9	1713619	3	WASHER
10	1713338A	3	HOUSING, Arbor Bottom (includes ref 45)
11	1705897	3	BEARING
12	1732544	3	SPACER, 2.679
13	2108202	3	BEARING
14	1715724	3	SPACER, Bearing Sleeve
15	1655729A	3	HOUSING, Arbor Top
16	1713533	1	HUB, Pulley Double
17	1713098	3	PULLEY
18	1713158	1	HUB, Pulley Double
19	1732951	1	PULLEY
20	1713197	2	HUB,PULLEY
21	1713675	6	WASHER, Belleville
22	1714419	3	NUT, Hex Flange 9/16-18
23	1707335	3	GASKET, Foam
24	1720560A	1	COVER, Arbor
25	1664847	27	SCREW, Hex Washer, Taptite 5/16-18 x 3/4
26	1931320	1	BOLT, Carriage 1/4-20 x 1-1/4
27	1960518	2	NUT, Push On
28	1706709	1	ROD, Deflector Front
29	1960353	1	WASHER
30	1710703	1	SPACER, 5/8
31	1920397	3	NUT, Hex Lock ESNA LIGHT 1/4-20
32	1704873	1	CLAMP
33	1919326	1	WASHER, Plain
34	7101082	1	SPRING
35	1705449	1	DEFLECTOR
36	1715673	1	COVER, Arbor
37	1723323	1	CAP, Spring End

Footnotes:

NOTE: This group applies to Models YT2350 (2690806) and YT2350 (2690752)

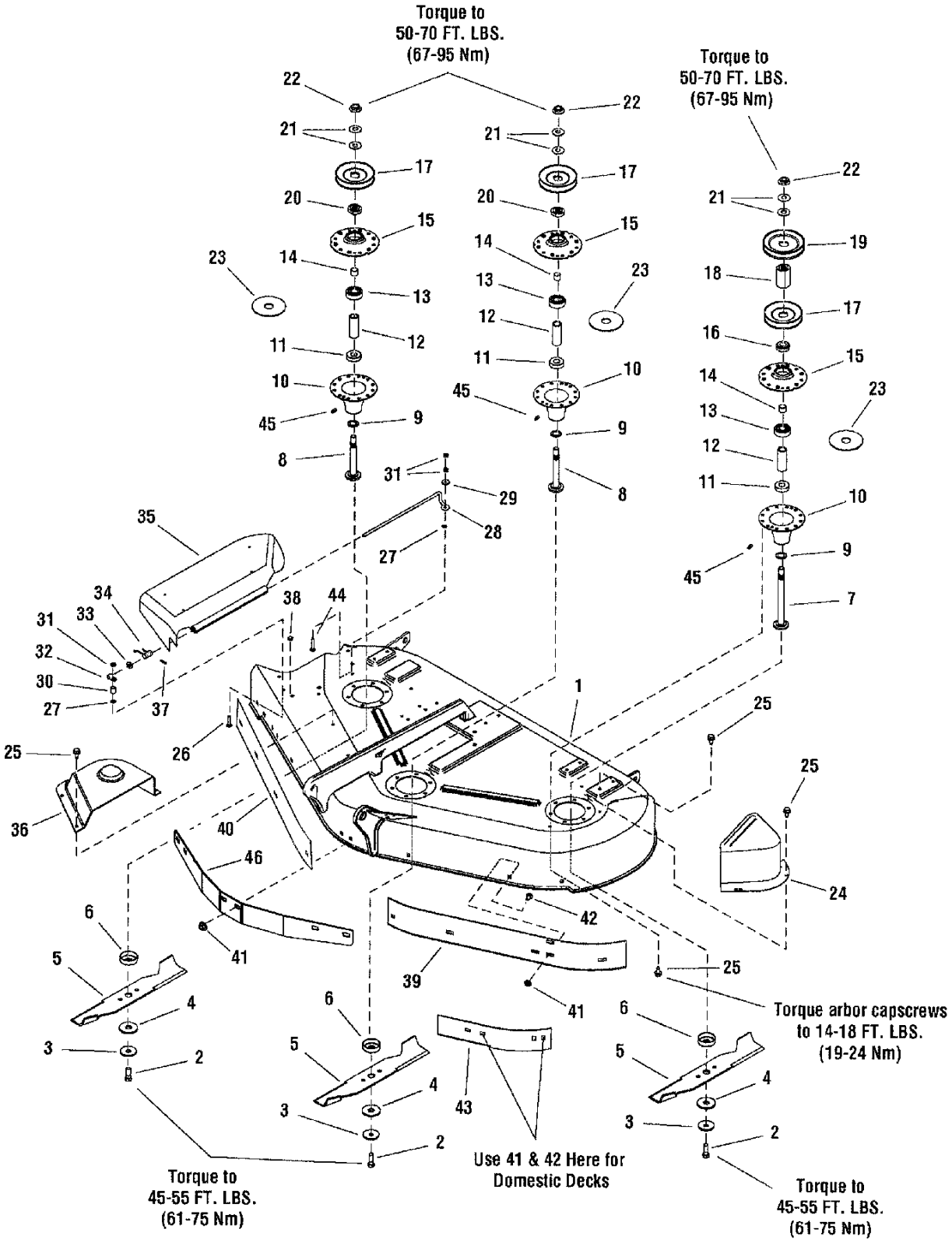
Torque to
50-70 FT. LBS.
(67-95 Nm)
Torque to
50-70 FT. LBS.
(67-95 Nm)
Torque arbor capscrews
to 14-18 FT. LBS.
(19-24 Nm)
Torque to
45-55 FT. LBS.
(61-75 Nm)
Use 41 & 42 Here for
Domestic Decks
Torque to
45-55 FT. LBS.
(61-75 Nm)

50" Mower Deck - Housing, Arbors & Blades

Item	Part No	Qty	Description
38	1705115	1	PLUG, Hole
39	1716870A	1	BAFFLE, Blowout, 50" LH
40	1735184A	1	BAFFLE, Blowout, 50" RH
41	1927557	11	NUT, Hex Flange 5/16-18
42	1931333	11	BOLT, Carriage 5/16-18 x 3/4
43	1734181A	1	BAFFLE, Front LH (Used on Model 2690752)
44	1960633	1	BOLT, Carriage 1/4-20 x 1-1/2
45	1704314	3	FITTING, Grease
46	1724538A	1	BAFFLE, Anti-Blowout (Used on Model 2690752)

Footnotes:

NOTE: This group applies to Models YT2350 (2690806) and YT2350 (2690752)

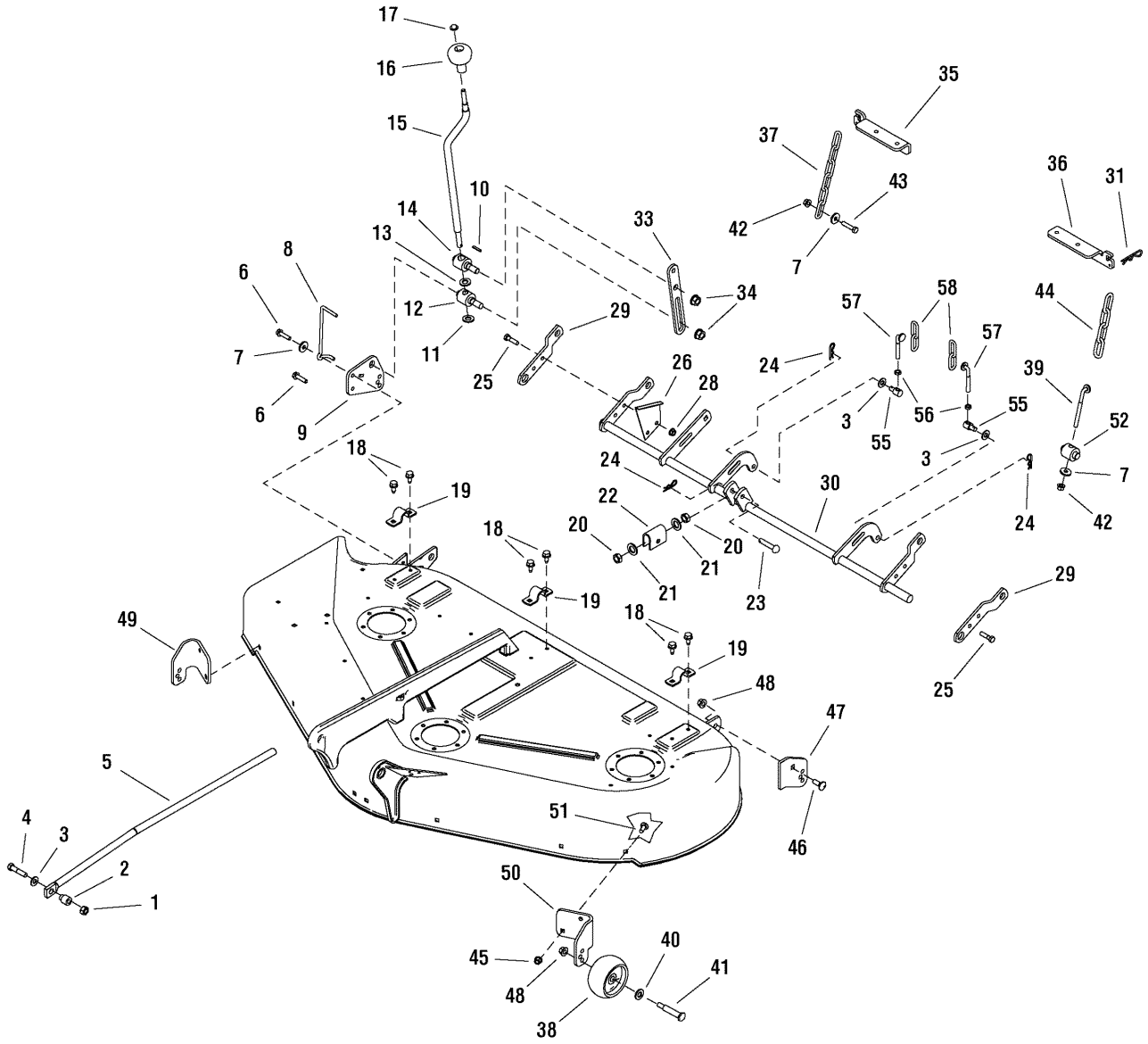
17
16
15
10
14
13
12
11
8
6
7
6
9
25
29
33
34
42
43
7
37
35
36
31
44
57
58
57
24
26
28
3
55
56
55
3
39
52
7
42
24
18
19
24
22
20
21
20
21
23
30
18
19
18
19
48
47
46
49
5
4
3
2
1
51
50
45
48
40
41
38
29
25

50" Mower Deck - Height Adjust Group

Item	Part No	Qty	Description
1	2860681	1	NUT, Hex Toplock Spiralock Flange 3/8-16
2	1706644	1	SPACER, 3/8 x 3/4 x 15/16
3	1924940	3	WASHER, 3/4
4	1922606	1	CAPSCREW, Hex Head 3/8-16 x 1-3/4 G8
5	1722995	1	ROD, Adjusting
6	1931202	2	SCREW, Hex Washer Head Taptite 5/16-18 x 1-1/4
7	1919381	3	WASHER, 5/16
8	1704114	1	INDICATOR, Cutting Height
9	1727134A	1	SUPPORT, Plate
10	2816001	1	PIN, Spring
11	1704097	1	WASHER, Detent
12	1704086	1	TRUNNION, 1-1/4
13	1960170	1	WASHER, 1/2
14	1704087	1	TRUNNION, 1-1/4
15	1719901	1	CRANK, Height Adjustment
16	1714084	1	KNOB, Spinner
17	1960093	1	NUT, Push Pal 3/8 Stud Capped
18	1664847	6	SCREW, Hex Washer Head Taptite 5/16-18 x 3/4
19	1665374	3	STRAP
20	1915726	2	NUT, Hex 5/8-11
21	1924366	2	WASHER, 5/8
22	1706645A	1	TRUNNION
23	2118053	1	PIN, Round Head Drilled 3/8 x 2
24	1960074	3	CLIP, Hair Pin
25	1921977	4	CAPSCREW, Hex Head 5/16-18 x 1-1/4 G5
26	1704116A	1	BRACKET, Height Of Cut 16GA
28	1931277	4	NUT, Hex Flange 5/16-18 Whiz Lock Small
29	1704083A	2	ARM, Rear R.H.
30	1727139A	1	SHAFT ASSEMBLY, Rocker
31	1960033	2	CLIP, Hair Pin
33	1727143A	1	STOP, Height Adjusting
34	1930644	2	NUT, Hex Flange 1/2-13 Two-Way Lock
35	1727102A	1	HANGER, RH
36	1727103A	1	HANGER, LH
37	1708266A	1	CHAIN, Link
38	1714760	4	WHEEL,
39	1724959	1	ROD, Height Adjusting

Footnotes:

NOTE: This group applies to all models except Models YT2350 (2690806) and YT2350 (2690752)

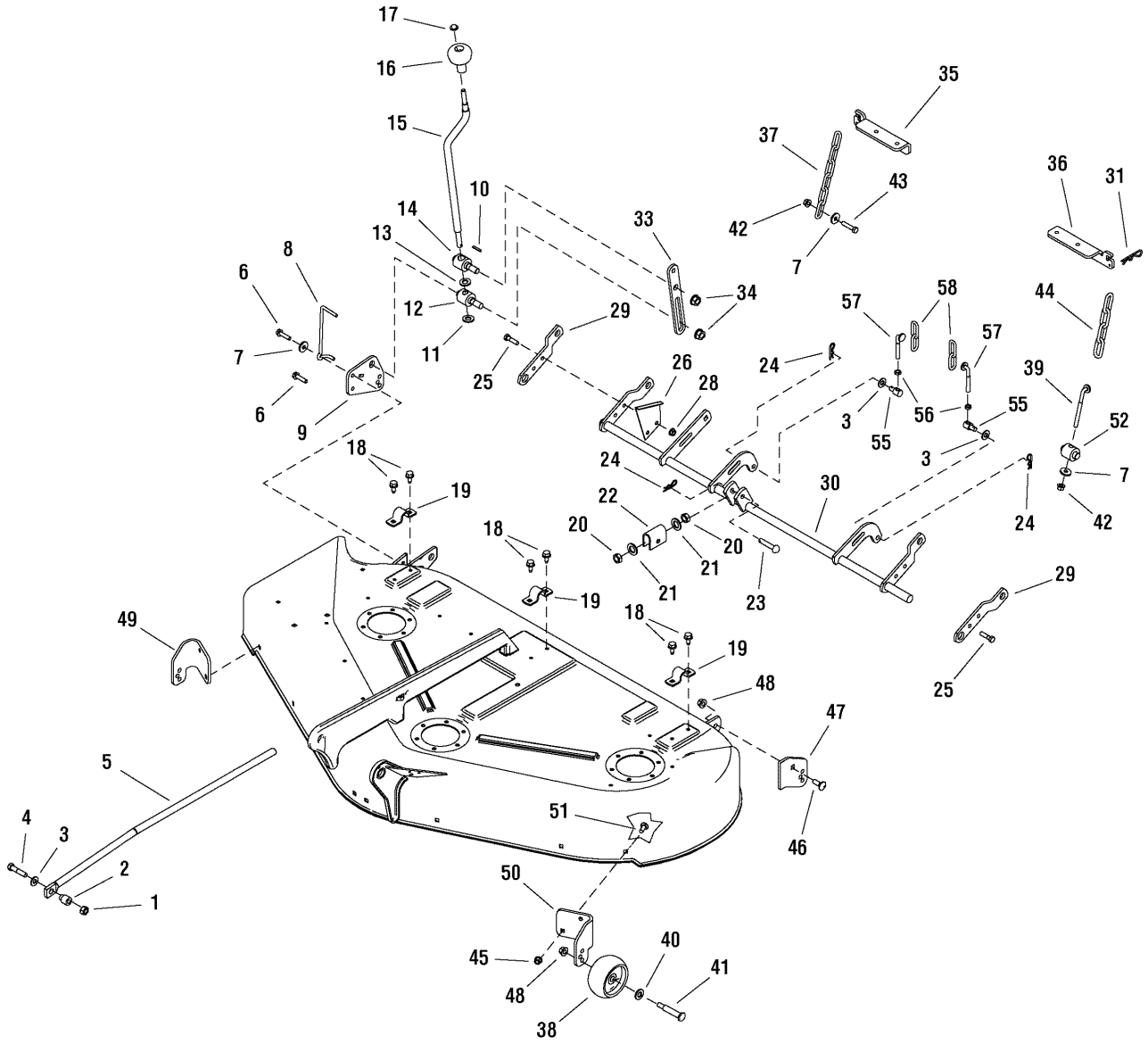
17
16
15
10
14
13
12
11
8
6
7
6
9
25
29
33
34
42
43
7
37
35
36
31
44
57
58
57
24
26
28
3
55
56
55
3
39
52
7
42
24
18
19
24
22
20
21
20
21
23
30
18
19
18
19
48
47
46
49
5
4
3
2
1
51
50
45
48
40
41
38
29
25

50" Mower Deck - Height Adjust Group

Item	Part No	Qty	Description
40	1960170	4	WASHER, 1/2
41	2108765	4	BOLT, Wheel 3/8-16
42	1960686	2	NUT, Hex Flange 5/16-18
43	1930570	1	CAPSCREW, Hex Head 5/16-18 x 1-1/2 G8
44	1708088A	1	CHAIN, Link
45	1927557	4	NUT, Hex Flange 5/16-18 Whiz Lock Large
46	1931350	1	CARRIAGE BOLT, 3/8-16 x 1 G5
47	1727135A	1	SUPPORT, Roller L.H.
48	1960687	5	NUT, Hex Flange 3/8-16 ESNA
49	1719853A	1	BRACKET, Wheel Gauge R.H.
50	1719852A	1	BRACKET, Wheel Gauge L.H.
51	1931334	4	CARRIAGE BOLT, 5/16-18 x 7/8 G5
52	1724009	1	TRUNNION
55	1731382	2	TRUNNION
56	1920161	2	NUT, Hex Jam 5/16-18
57	1731384	2	ROD, Height Adjusting 5/16-18
58	1731383A	2	CHAIN, Link

Footnotes:

NOTE: This group applies to all models except Models YT2350 (2690806) and YT2350 (2690752)

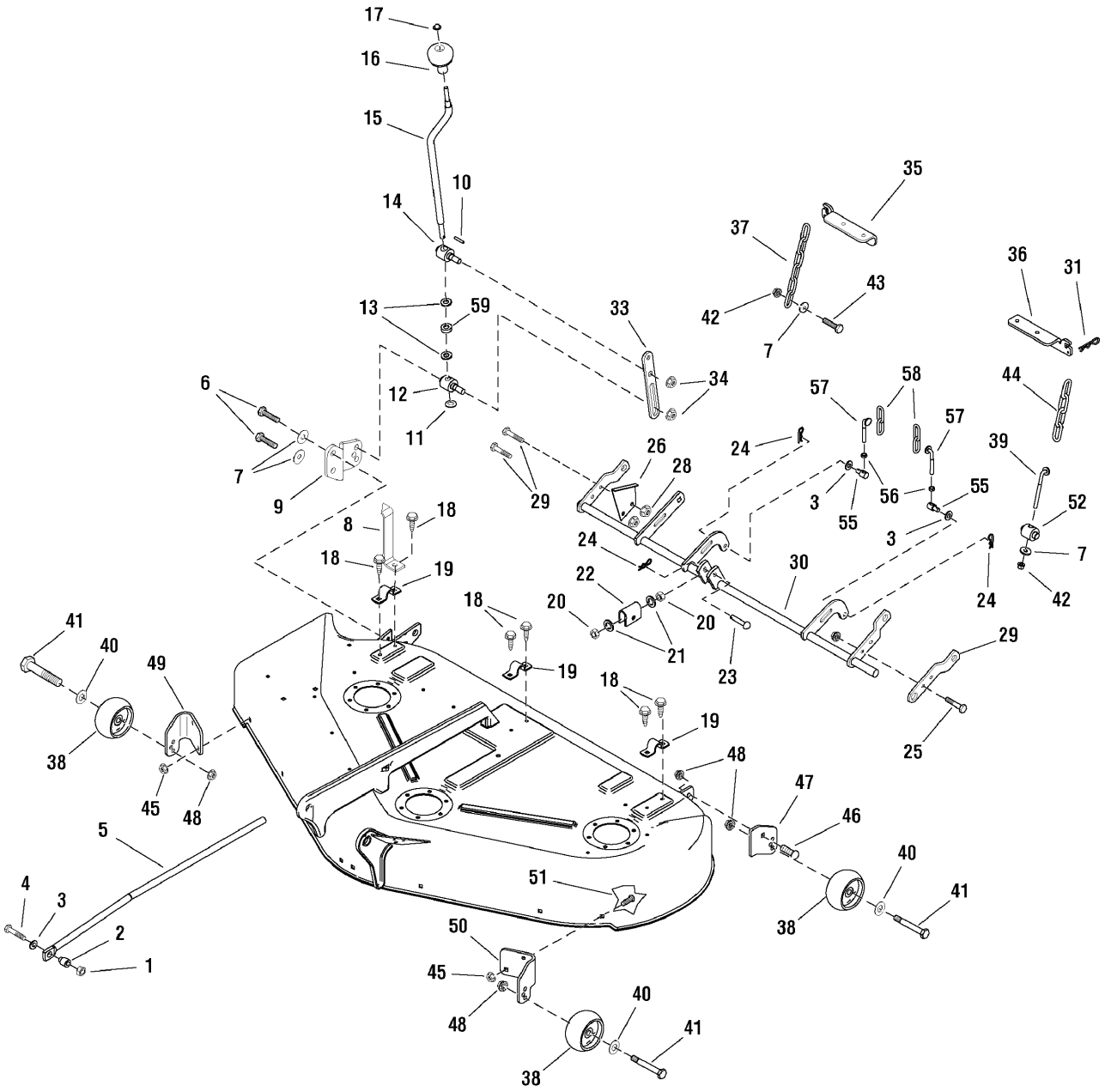
17
16
15
10
14
35
37
36
31
43
42
7
13
59
33
34
6
12
11
57
58
44
57
39
26
28
24
7
9
29
3
55
56
55
52
8
18
3
7
18
19
24
22
30
24
42
18
20
20
21
23
29
41
40
49
19
18
19
25
38
48
45
48
47
46
5
40
51
4
3
41
38
2
1
50
45
40
48
41
38

50" Mower Deck - Height Adjust Group

Item	Part No	Qty	Description
1	2860681	1	NUT, Hex Toplock Spiralock Flange, 3/8-16
2	1706644	1	SPACER, 3/8 x 3/4 x 15/16
3	1924940	3	WASHER, 3/4
4	1922606	1	CAPSCREW, Hex Head 3/8-16 x 1-3/4 G8
5	1722995	1	ROD, Adjusting
6	1927187	2	SCREW, Hex Washer Head Taptite 5/16-18 x 1
7	1919381	3	WASHER, 5/16
8	1720643A	1	INDICATOR, Cutting Height
9	1734771A	1	SUPPORT, Roller, R.H.
10	2816001	1	PIN, Spring
11	1704097	1	WASHER, Detent
12	1733286	1	TRUNNION, 1-1/4
13	1960170	1	WASHER, 1/2
14	1733258	1	TRUNNION, L.H. Thread, 1-1/4
15	1719901	1	CRANK, Height Adjustment
16	1714084	1	KNOB, Spinner
17	1960093	1	NUT, Push Pal 3/8 Stud Capped
18	1664847	6	SCREW, Hex Washer Head Taptite 5/16-18 x 3/4
19	1665374	3	STRAP
20	1915726	2	NUT, Hex 5/8-11
21	1924366	2	WASHER, 5/8
22	1706645A	1	TRUNNION
23	2118053	1	PIN, Round Head Drilled 3/8 x 2
24	1960074	3	CLIP, Hair Pin
25	1921977	4	CAPSCREW, Hex Head 5/16-18 x 1-1/4 G5
26	1704116A	1	BRACKET, Height Of Cut 16GA
28	1931277	4	NUT, Hex Flange 5/16-18 Whiz Lock Small
29	1704083A	2	ARM, Rear R.H.
30	1727139A	1	SHAFT ASSEMBLY, Rocker
31	1960033	2	CLIP, Hair Pin
33	1727143A	1	STOP, Height Adjusting
34	1930644	2	NUT, Hex Flange 1/2-13 Two-Way Lock
35	1727102A	1	HANGER, RH
36	1727103A	1	HANGER, LH
37	1708266A	1	CHAIN, Link
38	1714760	4	WHEEL
39	7028728	1	ROD, Height Adjusting (was 1724959)

Footnotes:

NOTE: This group applies to Models YT2350 (2690806) and YT2350 (2690752)

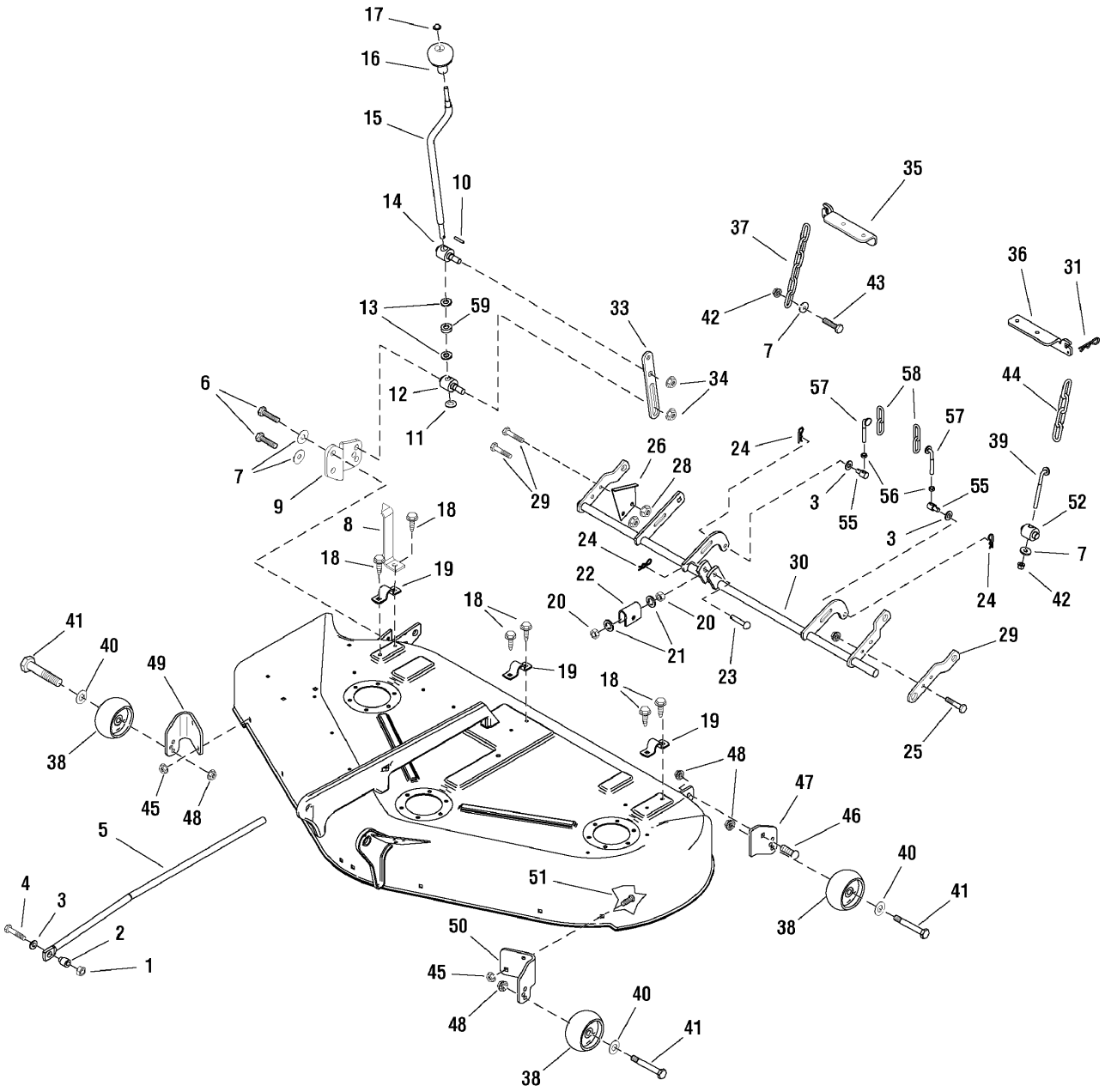
17
16
15
10
14
35
37
36
31
43
42
7
13
59
33
34
6
12
11
57
58
44
57
39
26
28
24
7
9
29
3
55
56
55
52
8
18
3
7
18
19
24
22
30
24
42
18
20
20
21
23
29
41
40
49
19
18
19
25
38
48
45
48
47
46
5
40
51
4
3
41
38
2
1
50
45
40
48
41
38

50" Mower Deck - Height Adjust Group

Item	Part No	Qty	Description
40	1960170	4	WASHER, 1/2
41	2108765	4	BOLT, Wheel 3/8-16
42	1960686	2	NUT, Hex Flange 5/16-18
43	1930570	1	CAPSCREW, Hex Head 5/16-18 x 1-1/2 G8
44	1708088A	1	CHAIN, Link
45	1927557	4	NUT, Hex Flange 5/16-18 Whiz Lock Large
46	1931350	1	CARRIAGE BOLT, 3/8-16 x 1 G5
47	1727135A	1	SUPPORT, Roller L.H.
48	1960687	5	NUT, Hex Flange 3/8-16 ESNA
49	1719853A	1	BRACKET, Wheel Gauge R.H.
50	1719852A	1	BRACKET, Wheel Gauge L.H.
51	1931334	4	CARRIAGE BOLT, 5/16-18 x 7/8 G5
52	1724009	1	TRUNNION
55	1731382	2	TRUNNION
56	1920161	2	NUT, Hex Jam 5/16-18
57	1731384	2	ROD, Height Adjusting 5/16-18
58	1731383A	2	CHAIN, Link
59	1716953	1	SPACER, 7/16 ID, 3/4 OD x 3/8

Footnotes:

NOTE: This group applies to Models YT2350 (2690806) and YT2350 (2690752)

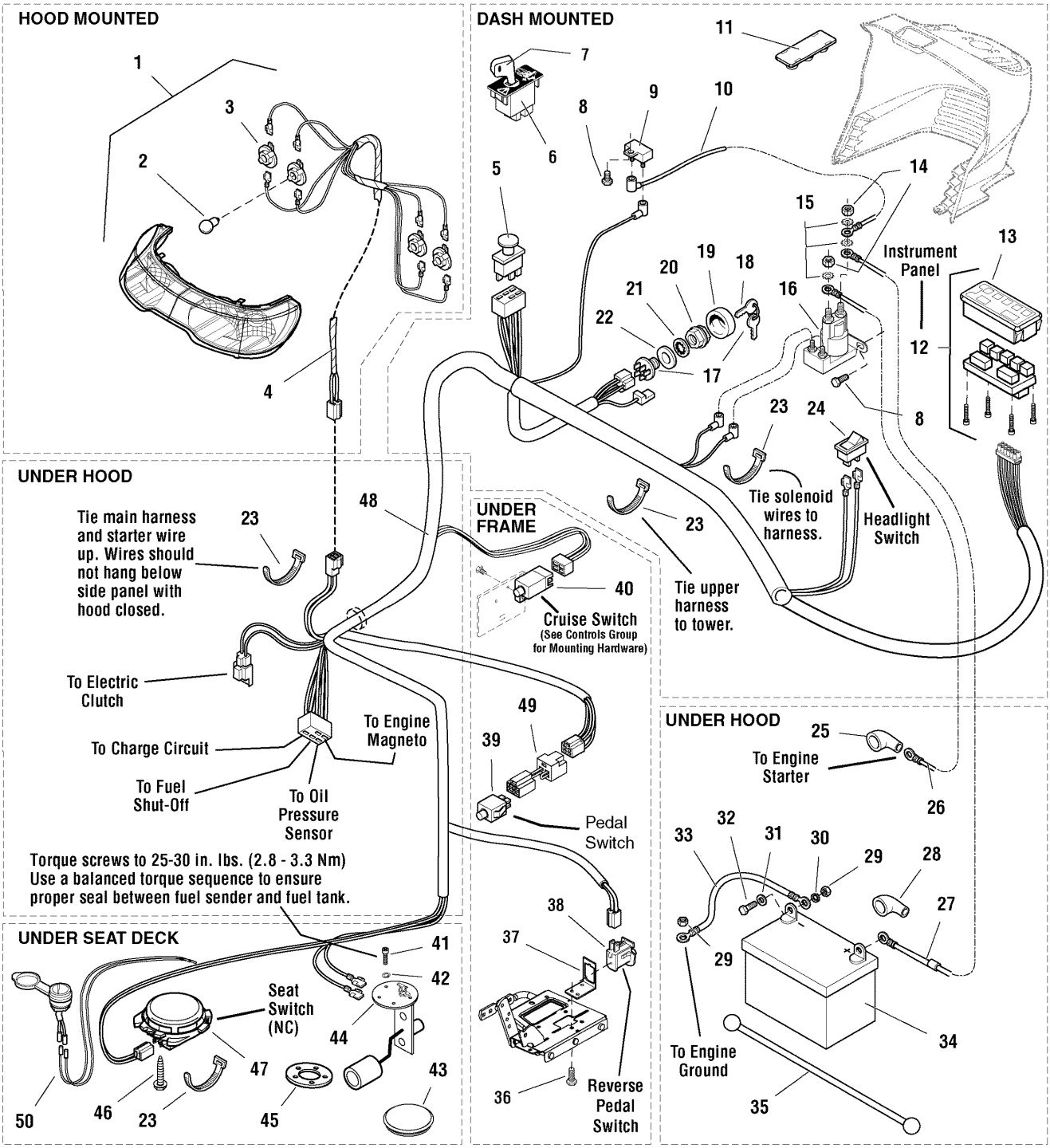
HOOD MOUNTED
DASH MOUNTED
UNDER HOOD
UNDER FRAME
UNDER HOOD
UNDER SEAT DECK
Instrument Panel
Tie solenoid wires to harness.
Headlight Switch
Tie upper harness to tower.
Tie main harness and starter wire up. Wires should not hang below side panel with hood closed.
Cruise Switch
(See Controls Group for Mounting Hardware)
To Electric Clutch
To Charge Circuit
To Fuel Shut-Off
To Oil Pressure Sensor
To Engine Magneto
Torque screws to 25-30 in. lbs. (2.8 - 3.3 Nm)
Use a balanced torque sequence to ensure proper seal between fuel sender and fuel tank.
Pedal Switch
Reverse Pedal Switch
Seat Switch (NC)
To Engine Starter
To Engine Ground

Electrical Group

Item	Part No	Qty	Description
1	1721810	1	HEADLIGHT ASSEMBLY, 4 Bulb (Includes Ref. Nos. 2 & 3)
2	1677371	4	BULB, Headlight, 12.8V
3	1723451	4	SOCKET ASSEMBLY, Headlight, Sealed
4	1722669	1	HARNESS, Headlight
5	1722887	1	SWITCH, PTO Push/Pull Symbols
6	1726556	1	MODULE, RMO (Includes Ref. No. 7)
7	1726557	1	KEY, RMO Module Plastic
8	1925003	2	CAPSCREW, Hex Washer Head Taptite, 1/4-20 x 1/2, Black
9	1665238	1	BREAKER, Circuit, 12 Volt 20 Amps
10	1665237	1	WIRE, 12GA 5-15/16 Long, Red
11	1722611	1	PLUG, Hole, Square
12	1725074	1	PANEL, Instrument w/ Fuel Gage & Hour Meter (Includes Ref. No. 13)
13	1724865	1	COVER, Instrument Panel
14	2820263	2	NUT, Hex, 5/16-24
14	2860750	2	NUT, KEPS Lock 5/16-24 (CE/Export) (Used only on RMO/ACS Models)
15	2820426	3	LOCKWASHER, External Tooth, 5/16
16	1722739	1	SOLENOID
16	1728963	1	SOLENOID (CE/Export) (Used only on RMO/ACS Models)
17	1686734	1	SWITCH ASSEMBLY, Ignition, 6 Pin INDAK (Includes Ref. Nos. 18, 19, 20, 21 & 22)
18	1717163	1	KEYS, Set of 2
19	1717550	1	COVER, For Ignition Switch, Plastic
20	1717549	1	NUT, Hex Flange, 5/8-32, Ignition Switch
21	1960547	1	LOCKWASHER, Internal Tooth, 5/8, Thin
22	2101025	1	WASHER, Shim
23	1701011	3	TIE, Strap, 7-5/16 Long
23	2825094	4	TIE, Strap, 7-5/16 Long (CE/Export) (Used only on RMO/ACS Models)
24	1716951	1	SWITCH, Headlights , 2 Terminal
25	1713535	1	BOOT, Insulator Cable Terminal, 1-15/16 Long, Red
26	1721830	1	CABLE, #6 x 25" Long, Ring Terminals
27	1603618	1	CABLE, #6 x 8" Long, Ring Terminals
28	1677296	1	BOOT, Insulator Battery Terminal
29	2816622	3	NUT, Hex, 1/4-20
30	2816964	2	LOCKWASHER, 1/4
31	2821319	2	WASHER, 1/4
32	2823341	2	CAPSCREW, Hex Head, 1/4-20 x 3/4
33	1713163	1	CABLE, #6 x 26 Long, Ring Terminal
34	1685215	1	BATTERY, 12 Volt

Footnotes:

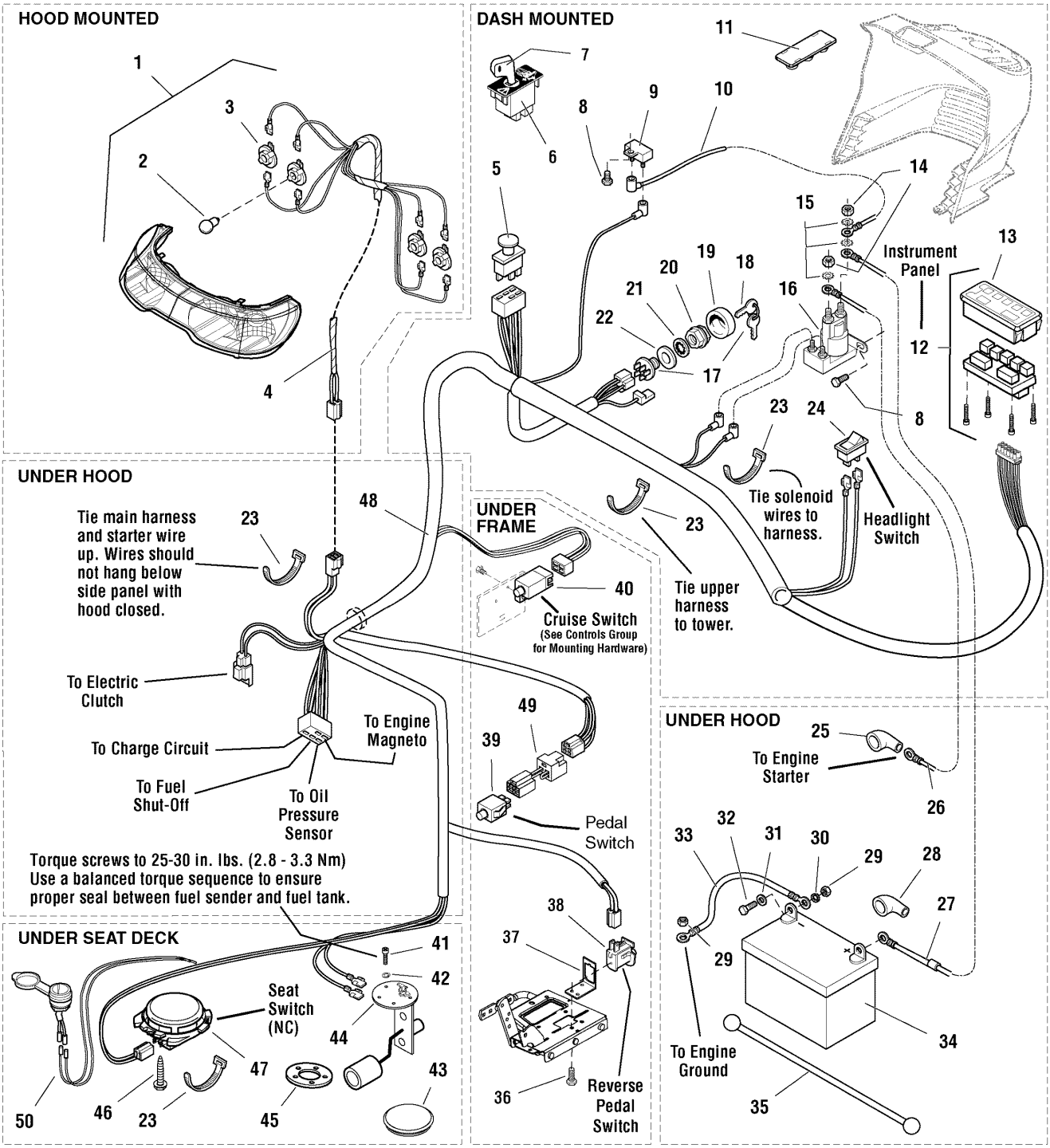
HOOD MOUNTED
DASH MOUNTED
UNDER HOOD
UNDER FRAME
UNDER HOOD
UNDER SEAT DECK
Instrument Panel
Tie solenoid wires to harness.
Headlight Switch
Tie upper harness to tower.
Tie main harness and starter wire up. Wires should not hang below side panel with hood closed.
Cruise Switch
(See Controls Group for Mounting Hardware)
To Electric Clutch
To Charge Circuit
To Fuel Shut-Off
To Oil Pressure Sensor
To Engine Magneto
Torque screws to 25-30 in. lbs. (2.8 - 3.3 Nm)
Use a balanced torque sequence to ensure proper seal between fuel sender and fuel tank.
Pedal Switch
Reverse Pedal Switch
Seat Switch (NC)
To Engine Starter
To Engine Ground

Electrical Group

Item	Part No	Qty	Description
35	1722009	1	STRAP, Battery, 14 Long, Rubber
36	1929000	2	CAPSCREW, Hex Head Taptite, 1/4-20 x 3/8
37	1726810A	1	BRACKET, Switch Mount
38	1732004	1	SWITCH, Reverse Pedal
38	1704379	1	SWITCH, Reverse Pedal (CE/Export) (Used only on RMO/ACS Models)
39	1732006	1	SWITCH, Push Button, Foot Pedal
40	1717050	1	SWITCH, Cruise Control, Grey, NO (Used on all models except CE/Export)
41	2860665	5	SCREW, Pan Head Torx, #10-32 x 1/2
42	1917365	5	LOCKWASHER, 3/16 #10
43	1722309	1	PLUG, Hole 3", Round
44	1686921	1	SENDER, Fuel Tank (Includes Ref. 45)
45	1685303	1	GASKET
46	1960536	2	CAPSCREW, Hex Washer Head Plastite, 1/4 x 1/2
47	1716368	1	SWITCH, Seat, Grey, NC
47	1718981	1	SWITCH, Seat, Grey, NC (CE/Export) (Used only on RMO/ACS Models)
48	1730192	1	HARNESS, Wiring
48	1733220	1	HARNESS, Wiring (CE/Export) (Used only on RMO/ACS Models)
49	1734025	1	WIRING ASSEMBLY, All Conditions Shutdown (CE/Export) (Used only on RMO/ACS Models)
50	1725302	1	12-VOLT OUTLET (CE/Export) (Used only on RMO/ACS Models)

Footnotes:

Parts Manual for

SNAPPER®

YARD TRACTORS ELECTRIC CLUTCH HYDRO DRIVE RMO ACS YT400 Series

IT IS THE POLICY OF BRIGGS & STRATTON CORP TO IMPROVE ITS PRODUCTS WHENEVER IT IS POSSIBLE AND PRACTICAL TO DO SO. WE RESERVE THE RIGHT TO MAKE CHANGES OR ADD IMPROVEMENTS AT ANY TIME WITHOUT INCURRING ANY OBLIGATION TO MAKE SUCH CHANGES ON PRODUCTS

Briggs & Stratton Yard Power Products Group
535 Macon Road
McDonough, GA, 30253 U.S.A.
800-935-2967

www.snapper.com

Manual No. 7006471
Revision: C 7/8/2009

Copyright © 2009 Briggs & Stratton Corporation
Milwaukee, WI USA. All Rights Reserved