Parts Manual for

SNAPPER®

21" STEEL DECK WALK BEHIND MOWERS SERIES 18

PUSH MODELS	*PROPELLED MODELS*
216518B	*EP217018BV* *ERP217018BV* *P216018KWV* *P216518B* *P217018BV* *P217018BVE*
	RP216018KWV *RP217018BV* *RP217018BVE*

SNAPPER **McDonough, GA, 30253 U.S.A.**

COPYRIGHT © 2004
SNAPPER PRODUCTS, INC.
ALL RIGHTS RESERVED.

Revision IR, 11/16/2004

Manual No. 06139
TP 400-5047-IR-WB-N

PAGE	GROUP
4	HANDLES & CONTROLS
8	CUTTING DECK, BLADES
12	FRONT WHEEL BRACKET
14	REAR WHEEL BRACKETS, LATCHES
16	FRONT WHEELS
18	REAR WHEELS
20	DRIVE SYSTEM SELF-PROPELLED
24	TRANSMISSION (DIFFERENTIAL)
26	THROTTLE CONTROLS/ENGINE SPECS
28	SIDE CHUTE ADAPTER
30	ACCESSORY GRASS BAG
32	ELECTRIC START COMPONENTS
34	DECALS
36	SNAPPERIZER ACCESSORY
38	THATCHERIZER ASSEMBLY
40	RECYCLING KITS ACCESSORY

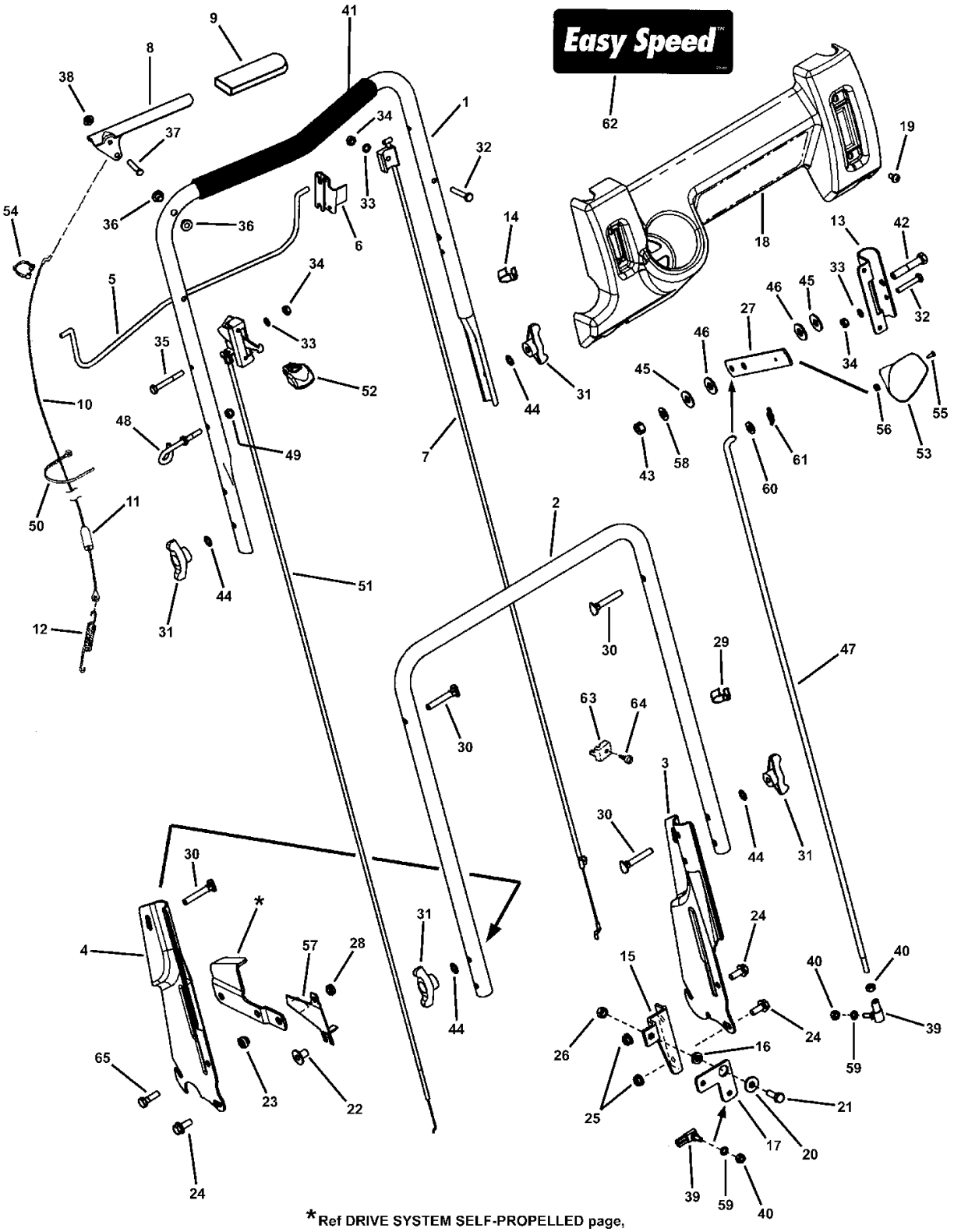
Easy Speed
*Ref DRIVE SYSTEM SELF-PROPELLED page, item 2

HANDLES & CONTROLS

Item	Part No	Qty	Description	Note
1	74411	1	HANDLE, Upper	*All*
2	74156	1	HANDLE, Middle	*All*
3	33985	1	HANDLE, Lower LH (Adjustable)	*All*
4	33986	1	HANDLE, Lower RH (Adjustable)	*All*
5	74418	1	BAIL, OPC Control	*All*
6	34872	1	CLIP, Zone Control	*All*
7	34608	1	CABLE, Zone Control (52-63/64" Long)	*216518B, P216518B, P217018BV, RP217018BV, EP217018BV & ERP217018BV*
--	78078	1	CABLE, Zone Control (50-31/64" Long)	*P217018BVE & RP217018BVE*
--	74141	1	CABLE, Zone Control (56-5/16" Long)	*P216018KWV & RP216018KWV*
8	74473	1	HANDLE, Clutch	*Self-Propelled Models*
9	28407	1	GRIP, International Symbol	*Self-Propelled Models*
10	34604	1	CABLE, Clutch Control (41-1/4" Long)	*Self-Propelled Models*
11	12121	1	COVER, Vinyl	*Self-Propelled Models*
12	12122	1	SPRING, Clutch- 21S	*Self-Propelled Models*
13	74003	1	BRACKET, Shift	*All*
14	24641	2	TIE, Wire, 1.29 long, black	*Self-Propelled Models*
15	73822	1	BRACKET, Bell Crank	*Self-Propelled Models*
16	13849	1	SPACER, .33 x .63 x .156	*Self-Propelled Models*
17	73913	1	BELL CRANK	*Self-Propelled Models*
18	73826	1	CONTROL PANEL (w/o Ground Drive Slot)	*216518B*
--	74140	1	CONTROL PANEL (w/o Electrical Switch Hole)	*P217018BV, P216518B, P216018KWV, RP217018BV, RP216018KWV, EP217018BV & ERP217018BV*
--	74469	1	CONTROL PANEL (w/Electrical Switch Hole)	*P217018BVE & RP217018BVE*
19	91200	4	SCREW, 1/4-20 x 1/2" Pan Head Self-Tap (Torx)	*All*
20	91130	1	WASHER, .33 x .88 x .09 Flat	*Self-Propelled Models*
21	91904	1	SCREW, 5/16-18 x 7/8" Hex Head Cap, GR 5	*Self-Propelled Models*
22	90895	1	TEENUT, 5/16-18	*Self-Propelled Models*
23	12114	1	BUSHING, Differential, .328 x .625 x .41	*Self-Propelled Models*
24	90595	3	BOLT, 5/16-18 x 3/4" Hex Flange Lock GR5	*All*
25	90585	2	NUT, 5/16-18 Hex Flange Lock, GR5	*All*
26	91067	1	NUT, 5/16-18 Hex Center Lock	*Self-Propelled Models*
27	74113	1	LEVER, Shift	*Self-Propelled Models*
28	91074	1	NUT, 5/16-24 Hex Center Lock GR5	*All*
29	23813	1	CLIP, Wiring Harness	*All*
30	91189	4	SCREW, 5/16-18 x 1-7/8" Curved Head GR2	*All*
31	35744	4	KNOB, 5/16-18 Wing (Black)	*All*
32	79577	2	SCREW, 1/4-20 x 1-1/2 Hex Head Cap GR5	*All*
33	91023	3	WASHER, 1/4" Internal Tooth Lock	*All*

Footnotes:

2 of 3
2 of 10
2 of 4
2 of 4

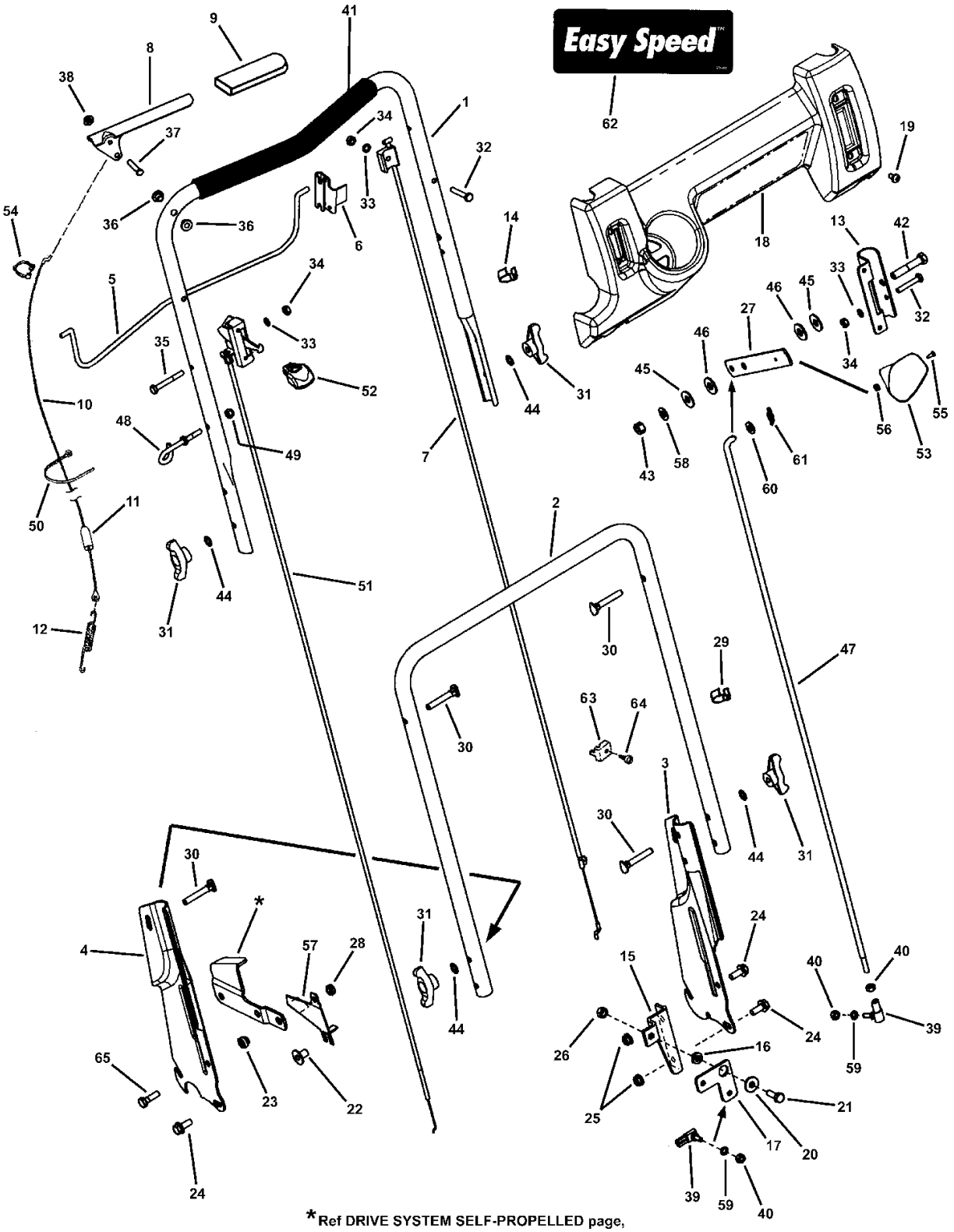
Easy Speed
*Ref DRIVE SYSTEM SELF-PROPELLED page, item 2

HANDLES & CONTROLS

Item	Part No	Qty	Description	Note
34	91100	3	NUT, 1/4-20 Hex	*All*
35	90505	1	SCREW, 1/4-20 x 2” Hex Head Cap, GR 5	
36	14343	2	BUSHING, .27 x .35 x .4 Flange	*Self-Propelled Models*
37	23792	1	PIN, 1/4 x 1-1/2”	*Self-Propelled Models*
38	91020	1	PUSH-NUT, 1/4”	*Self-Propelled Models*
39	15753	2	BALL JOINT, 1/4-28	*Self-Propelled Models*
40	90095	4	NUT, 1/4-28 Hex	*Self-Propelled Models*
41	22458	1	FOAM GRIP, 15” long	*All*
42	91305	1	SCREW, 3/8-16 x 2” Hex Head Cap, GR 5	*Self-Propelled Models*
--	91553	1	SCREW, 3/8-16 x 1-3/4” Hex Head Cap, GR 5	*Push Models*
43	91585	1	NUT, 3/8-16 Hex Center Lock	*All*
44	90391	4	WASHER, 5/16” Internal Tooth Lock	*All*
45	31961	8	WASHER, 7/16” Flat	*Self-Propelled Models*
46	28465	2	WASHER, Nylon	*Self-Propelled Models*
47	74133	1	ROD, Speed Control (1/4-28 thread)	*Self-Propelled Models*
48	28488	1	GUIDE, Rope (1/4-20 thread)	*All*
49	76978	1	NUT, 1/4-28 Hex GR5 or B	*All*
50	12080	2	CABLE-TIE, 7”	*Self-Propelled Models*
51	74460	1	THROTTLE CONTROL, .48 x .61	*Briggs models; see also Throttle Control page*
--	74138	1	THROTTLE CONTROL, 6.0 KWV	*Kawasaki models; see also Throttle Control page*
52	75308	1	THROTTLE KNOB	*All*
53	75182	1	KNOB, Shift	*Self-Propelled Models*
54	26219	1	CLAMP, 7/8” Double Cable	*Self-Propelled Models*
55	91167	1	SCREW, #8-32 x 1/2” Cross Recess Filister Head Machine	*Self-Propelled Models*
56	91018	1	NUT, #8-32 Hex	*Self-Propelled Models*
57	32408	1	BELT GUIDE, Lower	*Self-Propelled Models*
58	28568	1	WASHER, Belleville	*Self-Propelled Models*
59	90053	4	WASHER, 1/4” Internal Tooth Lock	*Self-Propelled Models*
60	90188	1	WASHER, 3/8” Flat	*Self-Propelled Models*
61	34162	1	COTTER PIN, 5/16 Self Lock	*Self-Propelled Models*
62	29365	1	DECAL, Easy Walk	*All*
63	23153	1	CLAMP, Casing	*models with Briggs Engine*
64	23154	1	SCREW,#10-32 x 5/8” Self-Tap	*models with Briggs Engine*
65	90238	1	SCREW, 5/16-24 x 1” Hex Head Cap GR5	*All*

Footnotes:

2 of 3
2 of 10
2 of 4
2 of 4

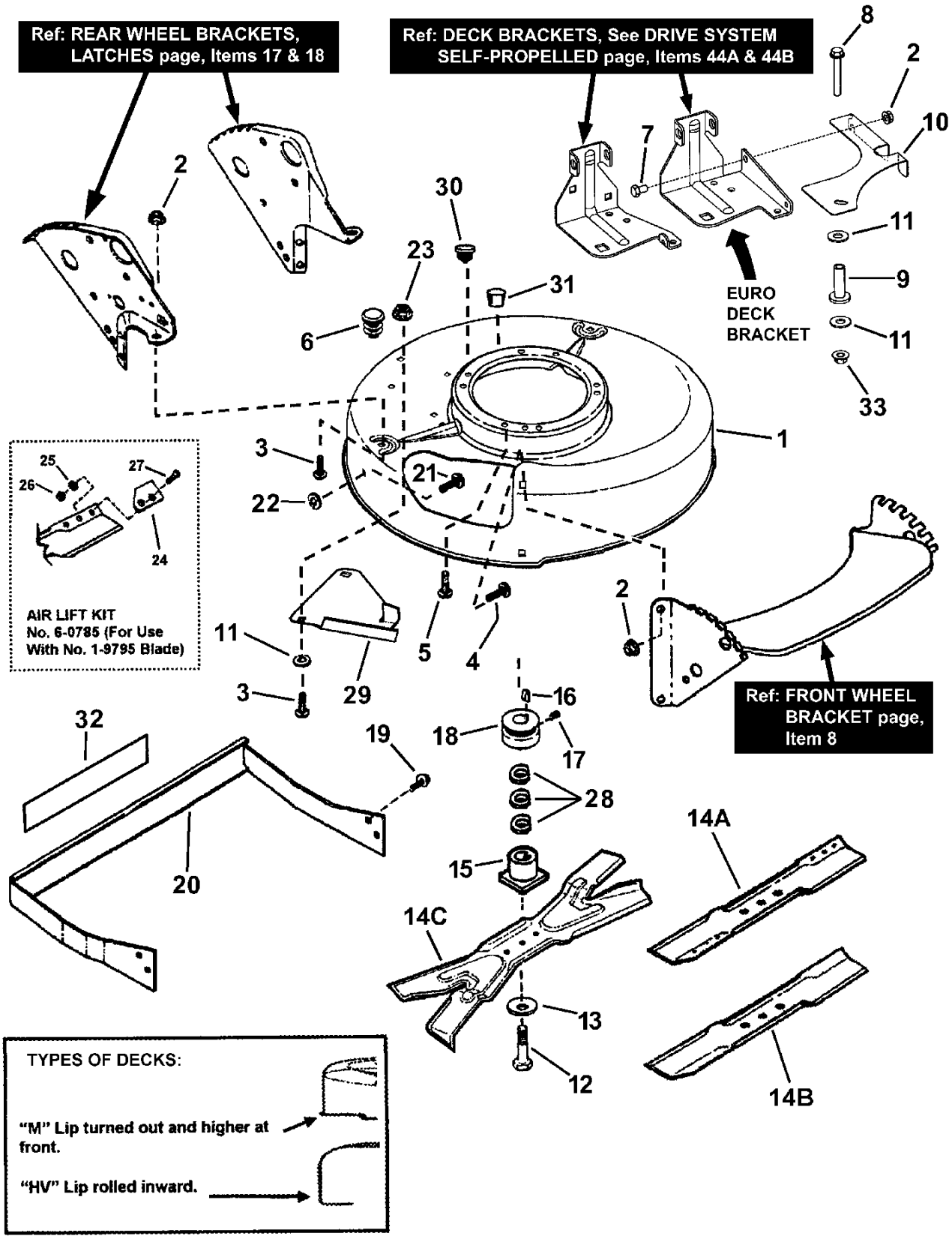
Ref: REAR WHEEL BRACKETS, LATCHES page, Items 17 & 18
Ref: DECK BRACKETS, See DRIVE SYSTEM SELF-PROPELLED page, Items 44A & 44B
EURO DECK BRACKET
AIR LIFT KIT No. 6-0785 (For Use With No. 1-9795 Blade)
Ref: FRONT WHEEL BRACKET page, Item 8
TYPES OF DECKS:
"M" Lip turned out and higher at front.
"HV" Lip rolled inward.
1
2
3
4
5
6
7
8
9
10
11
12
13
14A
14B
14C
15
16
17
18
19
20
21
22
23
24
25
26
27
28
29
30
31
32
33

CUTTING DECK, BLADES

Item	Part No	Qty	Description	Note
1	57663	1	DECK, Mower (incl. painted “HV” Deck with Decals)	*P216018KWV, P216518B, P217018BV, P217018BVE & EP217018BV*
--	72716	1	DECK, Mower, 21” Hi-Vac (HV)	*216518B*
--	74949	1	DECK, Mower (Includes painted “Euro M” Deck with No Decals)	*RP217018BVE*
--	41857*	1	DECK, Mower, 21” Non-Adj Air	*RP217018BV, RP216018KWV & ERP217018BV*
2	90585	10	NUT, 5/16-18 Hex Flange Lock, GR5	
3	90731	3	BOLT, 5/16-18 x 1/2”, Short Neck Carriage, GR 5	
4	91169	1	BOLT, 5/16-18 x 1-1/8” Short Neck Carriage, GR 5	
5	90324	3	SCREW, 3/8-16 x 1” Self-Tapping	*engine mount bolts*
6	46780	2	PLUG, Hole, Polyethylene	
7	90534	1	SCREW, 5/16-18 x 1/2” Hex Head Cap, GR 5	
8	90702	1	BOLT, 5/16-18 x 2-1/4”, Hex Flange Lock	
9	13320	1	BUSHING, .388 x .625 x 1.62	
10	33863	1	COVER, Belt	*European models*
11	31961	3	WASHER, 7/16” Flat	
12	90167	1	SCREW, 3/8-24 x 2” Hex Head Cap, GR 5	
13	12063	2	WASHER, Cone	
14A	19795	1	BLADE, Cutter, 21” Air Lift (European)	*EP217018BV*
14B	26691	1	BLADE, Cutter (Standard Lift)	*216518B, P216518B, P216018KWV, P217018BV & P217018BVE*
14C	26407	1	BLADE, 21” Ninja (Quad Edge)	*RP217018BV, RP217018BVE, RP216018KWV & ERP217018BV*
15	15626	1	HUB, Blade Drive 25mm I.D.	
16	91214	1	KEY, Woodruff #HP-506 Hi-Pro	
17	90201	1	SET SCREW, 5/16-18 x 5/16” Hex Socket	
18	15780	1	PULLEY, Engine (25mm I. D. x 2-1/8” O.D.)	
19	90539	6	SCREW, 1/4-20 x 1/2” Hex Flange Self-Tap	*EP217018BV & ERP217018BV*
20	41400	1	WELDMENT, Fender	*European models*
21	90001	2	BOLT, 5/16-18 x 3/4” Short Neck Carriage GR5	
22	11791	1	RETAINER, 5/16” Bolt	
23	91070	3	NUT, 5/16-18 Hex Flange Lock, GR 5	
--	60785	--	KIT, Air Lift (Incl. items 24 thru 27)	
24	32558	2	AIR LIFT	
25	90391	4	WASHER, 5/16” Internal Tooth Lock	
26	90223	4	NUT, 5/16-24 Hex, GR 5	
27	90228	4	SCREW, 5/16-24 x 21/32” Machine	
28	44770	3	SPACER, .06 Thick	*for blade hub*
29	74568	1	COVER, Belt	
30	46471	3	PLUG, 5/16” Square Hole	*Push Models*
31	45264	2	PLUG, 5/16” Round Hole	*qty. 3 on Push Models*

Footnotes:

*Note: Same deck as 74949 except without battery bracket holes.

*NOTE: Purchase engine parts from engine manufacturer dealer.

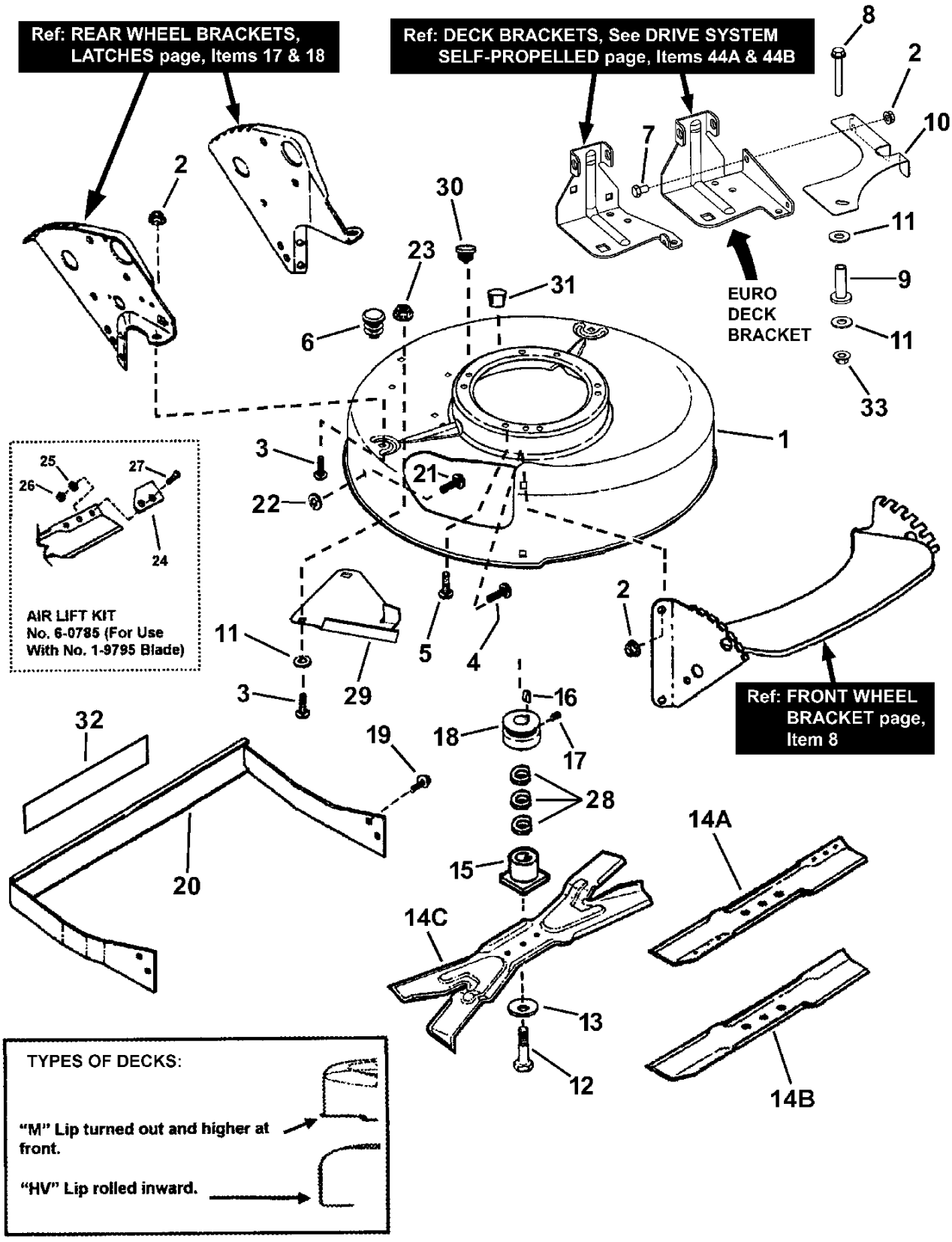
Ref: REAR WHEEL BRACKETS, LATCHES page, Items 17 & 18
Ref: DECK BRACKETS, See DRIVE SYSTEM SELF-PROPELLED page, Items 44A & 44B
EURO DECK BRACKET
AIR LIFT KIT No. 6-0785 (For Use With No. 1-9795 Blade)
Ref: FRONT WHEEL BRACKET page, Item 8
TYPES OF DECKS:
"M" Lip turned out and higher at front.
"HV" Lip rolled inward.
1
2
3
4
5
6
7
8
9
10
11
12
13
14A
14B
14C
15
16
17
18
19
20
21
22
23
24
25
26
27
28
29
30
31
32
33

CUTTING DECK, BLADES

Item	Part No	Qty	Description	Note
32	73462	1	DECAL, Caution, International Symbols	*European models*
33	90951	1	NUT, 5/16-18 Hex Large Flange Center Lock	
--	--	1	*ENGINE, 6.0 Kawasaki	*Model FJ180V, Type AS13-R; used on P216018KWV & RP216018KWV*
--	--	1	*ENGINE, 6.5 Briggs Intek	*Model 123K02, Type 0124, Trim E1; used on 216518B & P216518B*
--	--	1	*ENGINE, 7.0 Briggs Intek E/S	*Model 128607, Type 0113, Trim E1; used on P217018BVE & RP217018BVE*
--	--	1	*ENGINE, 7.0 Briggs Intek- Euro	*Model 128602, Type 0112, Trim E1; used on EP217018BV & ERP217018BV*
--	--	1	*ENGINE, 7.0 Briggs Intek	*Model 128602, Type 0149, Trim E1; used on P217018BV & RP217018BV*

Footnotes:

*Note: Same deck as 74949 except without battery bracket holes.

*NOTE: Purchase engine parts from engine manufacturer dealer.

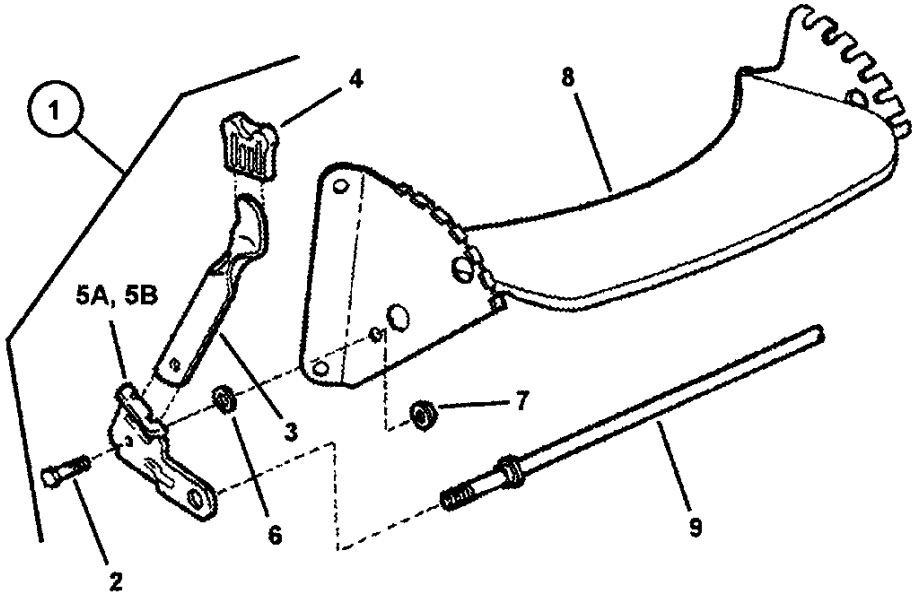
1
4
8
5A, 5B
3
7
6
9
2

FRONT WHEEL BRACKET

Item	Part No	Qty	Description	Note
1	51885	1	ASSEMBLY, Left Wheel Arm	*(Consists of items 2, 3, 4, 5B & 6)*
--	51886	1	ASSEMBLY, Right Wheel Arm	*(Consists of items 2, 3, 4, 5A & 6)*
2	15761	1	BOLT, 5/16-18 Hex Washer Face Shoulder	*per wheel arm assembly*
3	12325	1	LATCH, Height	*per wheel arm assembly*
4	27702	1	GRIP, Height Latch	*per wheel arm assembly*
5A	31017	1	WHEEL ARM, R.H. Front (Round Hole)	
5B	31016	1	WHEEL ARM, L.H. Front (Square Hole)	*not shown*
6	11791	1	RETAINER, 5/16” Bolt	
7	91070	2	NUT, 5/16-18 Hex Flange Lock, GR 5	
8	41770	1	WELDMENT, Front Wheel Bracket	*216518B, P216518B, P216018KWV, P217018BV, P217018BVE, EP217018BV & ERP217018BV*
--	74702	1	WELDMENT, Front Wheel Bracket	*RP217018BV, RP217018BVE & RP216018KWV*
9	21119	1	AXLE, 21”	

Footnotes:

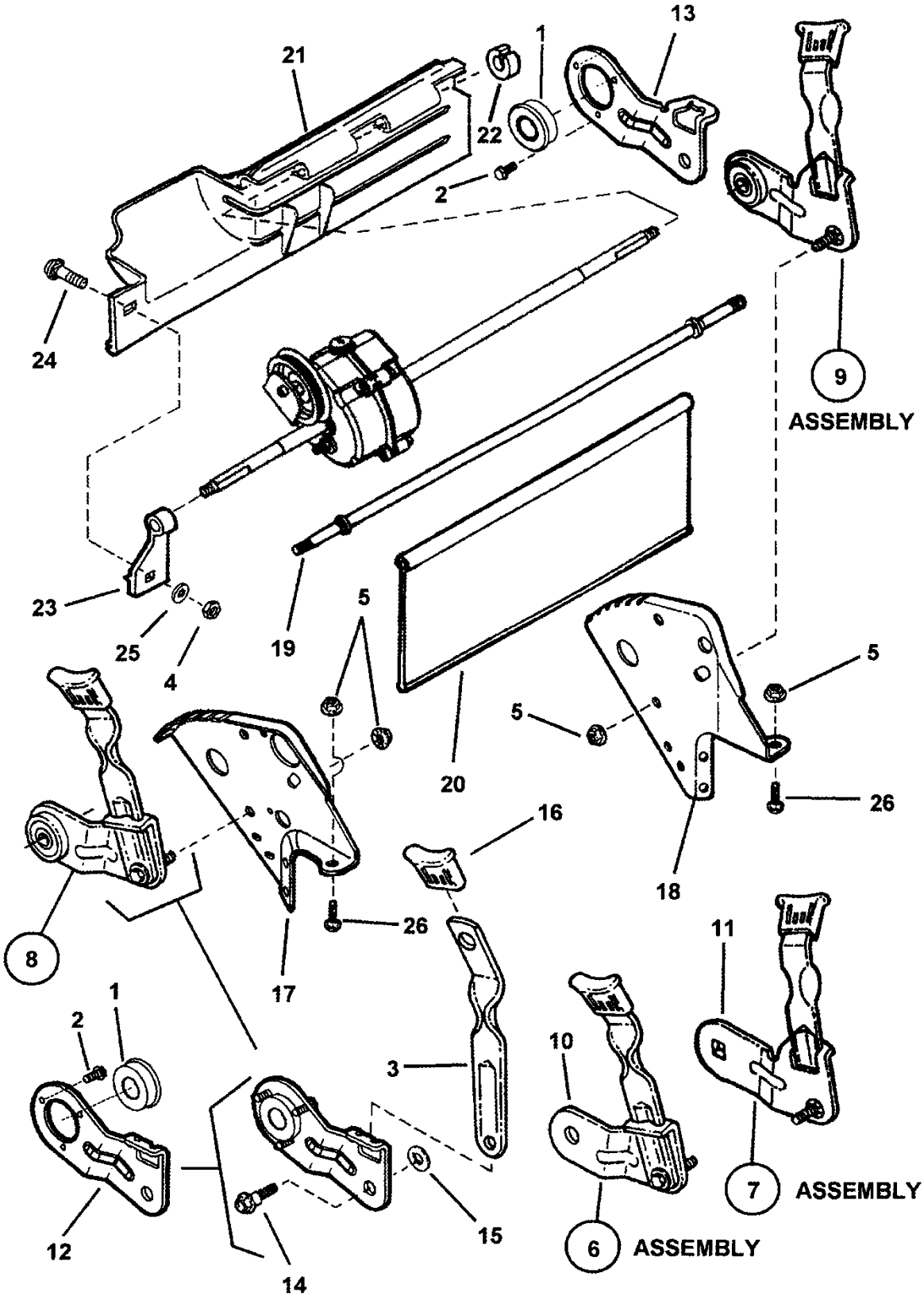
21
1
22
13
2
24
9
ASSEMBLY
23
25
4
19
5
20
5
5
26
18
16
26
17
8
11
1
2
3
10
12
14
15
6
ASSEMBLY
7
ASSEMBLY

REAR WHEEL BRACKETS, LATCHES

Item	Part No	Qty	Description	Note
1	12312	1	BEARING, 9/16" I.D.	*per Rear Wheel Arm*
2	91012	3	SCREW, #10-32 x 3/8" Hex Washer Self-Tap	*per Rear Wheel Arm*
3	35717	1	LATCH, Height Adjusting (long)	*per Rear Wheel Arm*
4	90063	1	NUT, 1/4-20 Hex	*or 91100*
5	91070	6	NUT, 5/16-18 Hex Flange Lock, GR 5	
6	54228	1	ASSEMBLY, Wheel Arm, Right Rear (Round hole)	*used on Push models (Incl. items 3, 10, 14, 15 & 16)*
7	54229	1	ASSEMBLY, Wheel Arm, Left Rear (Square hole)	*used on Push models (Incl. items 3, 11, 14, 15 & 16)*
8	54230	1	ASSEMBLY, Wheel Arm, Right Rear	*used on Self-Propelled models (Incl. items 1, 2, 3, 12, 14, 15 & 16)*
9	54231	1	ASSEMBLY, Wheel Arm, Left Rear	*used on Self-Propelled models (Incl. items 1, 2, 3, 13, 14, 15 & 16)*
10	33776	1	WHEEL ARM, R.H. Rear (round opening) (right rear)	*used on Push models*
11	33775	1	WHEEL ARM, L.H. Rear (square opening) (left rear)	*used on Push models*
12	32722	1	ARM, Wheel, Right Rear	*used on Self-Propelled models*
13	32723	1	ARM, Wheel, Left Rear	*used on Self-Propelled models*
14	11078	1	BOLT, 5/16-18 x 1" Shoulder	*per wheel arm assembly*
15	11791	2	RETAINER, 5/16" Bolt	*per wheel arm assembly*
16	27702	1	GRIP, Height Latch	*per wheel arm assembly*
17	33494	1	BRACKET, Right Rear Wheel	*all*
18	33495	1	BRACKET, Left Rear Wheel	*all*
19	21119	1	AXLE, 21"	*qty. 2 on push models; qty. 1 on self-propelled*
20	35741	1	FOOT GUARD, Long, Rear	*Push Models only*
21	29008	1	FOOT GUARD, Rear	*used on Domestic Self-Propelled models*
--	42918	1	FOOT GUARD, Rear	*used on Euro Self-Propelled models*
22	23791	1	RING, Split (Black)	*used on Self-Propelled models*
23	12616	1	SUPPORT, Foot Guard	*used on Self-Propelled models*
24	90005	1	BOLT, 1/4-20 x 1/2" Short Neck Carriage GR5	*used on Self-Propelled models*
25	91023	1	WASHER, 1/4" Internal Tooth Lock	
26	90731	2	BOLT, 5/16-18 x 1/2", Short Neck Carriage, GR 5	

Footnotes:

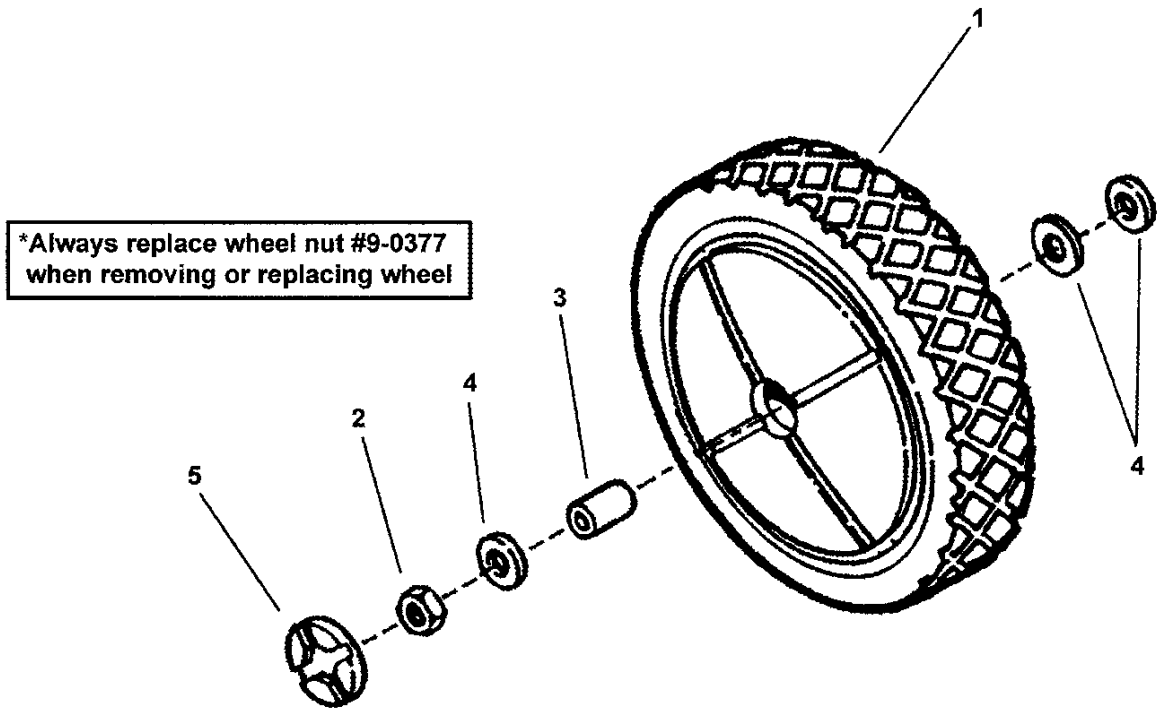
*Always replace wheel nut #9-0377
when removing or replacing wheel
1
2
3
4
4
5

FRONT WHEELS

Item	Part No	Qty	Description	Note
1	29010	2	WHEEL, 8 x 1.75 Plastic	*all*
2	90377	2	NUT, 7/16-20 Hex Center Lock Jam	
3	12309	2	BUSHING, Axle	
4	31961	2	WASHER, 7/16” Flat	
5	17829	2	PLUG, Wheel	*all*

Footnotes:

PUSH MODELS

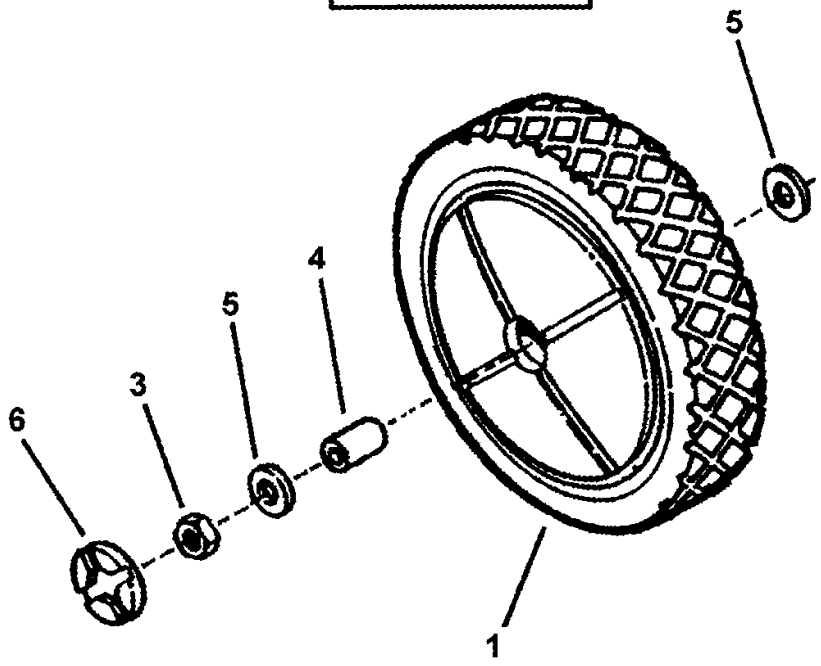

SELF-PROPELLED MODELS

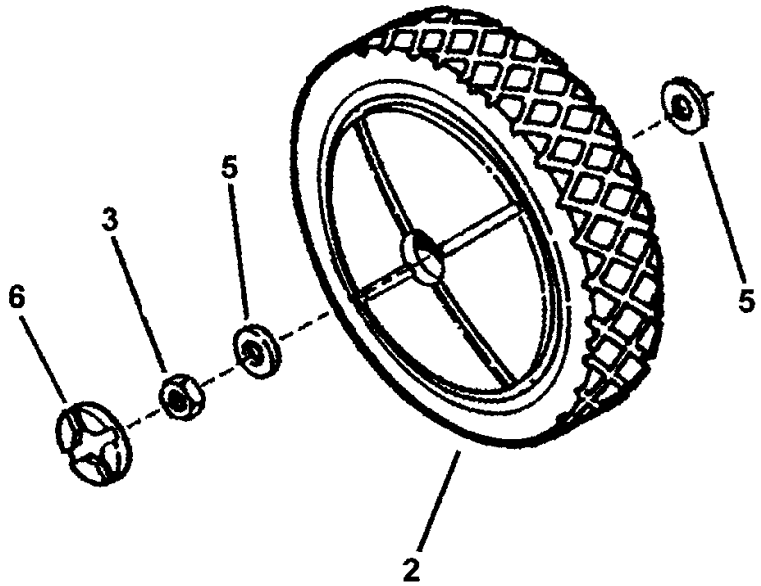

REAR WHEELS

Item	Part No	Qty	Description	Note
1	74924	2	WHEEL, 10 x 1.75” Plastic	*Push Models only*
2	29011	2	WHEEL, 10 x 1.75” Plastic	*used on Self-Propelled models*
3	90377	2	NUT, 7/16-20 Hex Center Lock Jam	*all*
4	12309	2	BUSHING, Axle	*Push Models only*
5	31961	2	WASHER, 7/16” Flat	
6	17829	2	PLUG, Wheel	*all*

Footnotes:

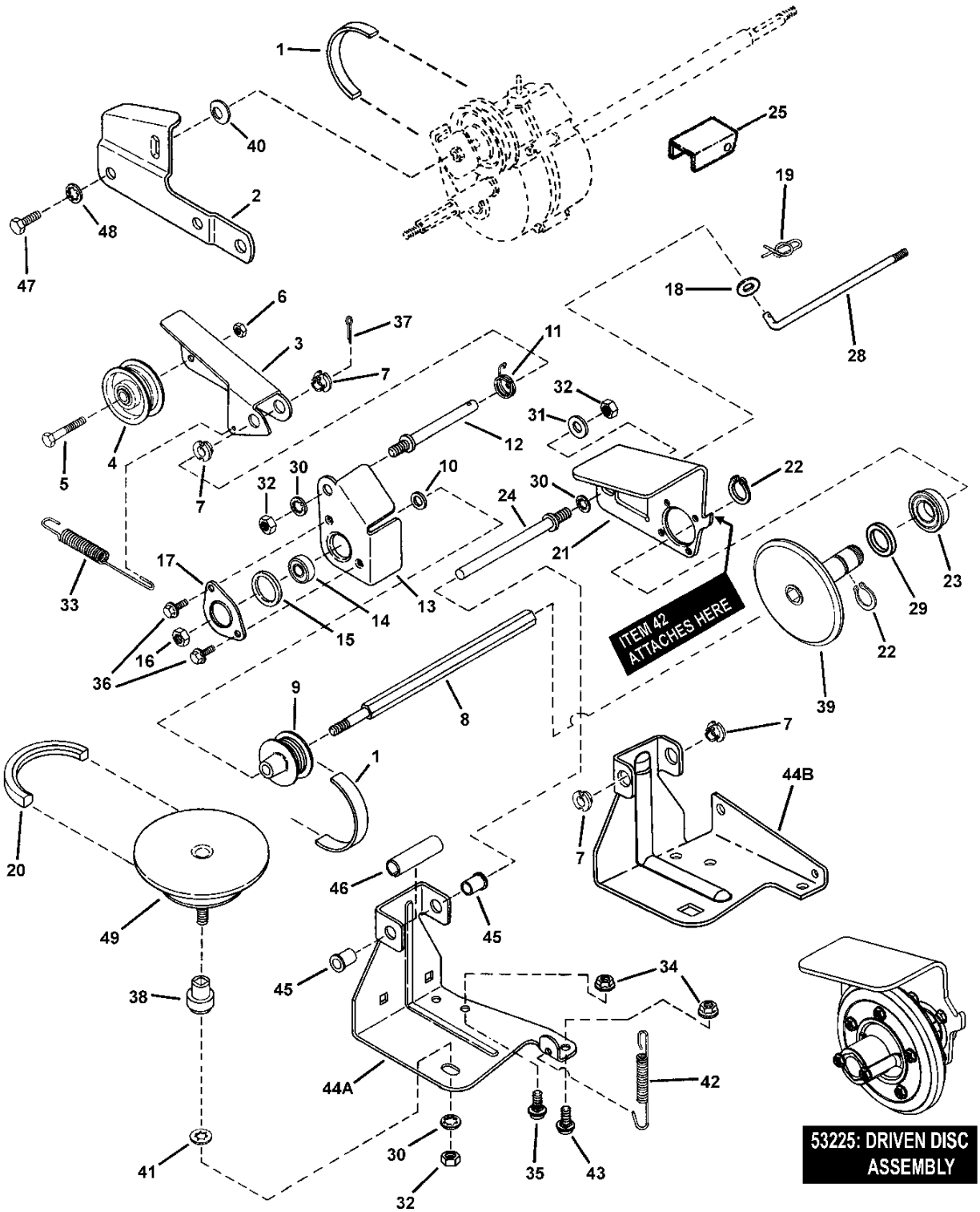
ITEM 42 ATTACHES HERE
53225: DRIVEN DISC ASSEMBLY

DRIVE SYSTEM SELF-PROPELLED

Item	Part No	Qty	Description	Note
1	12354	1	BELT, Poly-V	
2	34179	1	LINK, Differential	
--	51921	--	ASSEMBLY, Clutch Idler (Includes items 3 thru 7)	
3	32832	1	ARM, Clutch Idler	
4	12124	1	PULLEY, Idler	
5	91025	1	SCREW, 1/4-28 x 1-3/8" Hex Head Cap, GR 5	
6	90303	1	NUT, 1/4-28 Hex Top Lock	
7	12117	4	BUSHING, 3/8" I.D. Nylon	
8	72284	1	SHAFT, Hex Drive	
9	24521	1	PULLEY, Poly-V (2" O.D.)	*for non-Commercial models*
10	90188	1	WASHER, 3/8" Flat	
11	12126	1	SPRING, Idler- Torsion	
12	12111	1	STUD, Idler (3/8-24 thread)	
13	31873	1	HOLDER, Bearing (Inner Half)	
14	28014	1	BALL BEARING, Spherical O.D., .38 I.D.	
15	11025	1	O-RING	
16	90289	1	NUT, 3/8-24 Hex Center Lock, GR 5	
17	31809	1	HOLDER, Bearing (Outer Half)	
18	91294	1	WASHER, .28 x .63 x .06 Flat	
19	91629	1	COTTER PIN, .06 x .50	
20	46784	1	BELT, Engine Drive (Stretch)	
21	34281	1	THRUST PLATE, Short	
22	10746	2	RETAINING RING, .625 External	
23	26693	1	BALL BEARING- 3/4" Bore	
24	12125	1	GUIDE, Thrust Plate (3/8-24 thread)	
25	32664	1	SHIELD, Hex Shaft	*European models only*
26	15753	1	BALL JOINT, 1/4-28	*not shown; see Handles & Controls page, item 39*
27	90095	2	NUT, 1/4-28 Hex	*not shown; see Handles & Controls page, item 40*
28	74145	1	LINK, Transfer (1/4-28 thread)	
29	10121	1	WASHER, 3/4" Shim	
30	90390	3	WASHER, 3/8" Internal Tooth Lock	
31	90122	1	WASHER, 3/8" Flat	
32	91630	2	NUT, 3/8-24 Hex	
33	12122	1	SPRING, Clutch- 21S	
34	91070	2	NUT, 5/16-18 Hex Flange Lock, GR 5	
35	90731	1	BOLT, 5/16-18 x 1/2", Short Neck Carriage, GR 5	
36	90539	2	SCREW, 1/4-20 x 1/2" Hex Flange Self-Tap	

Footnotes:

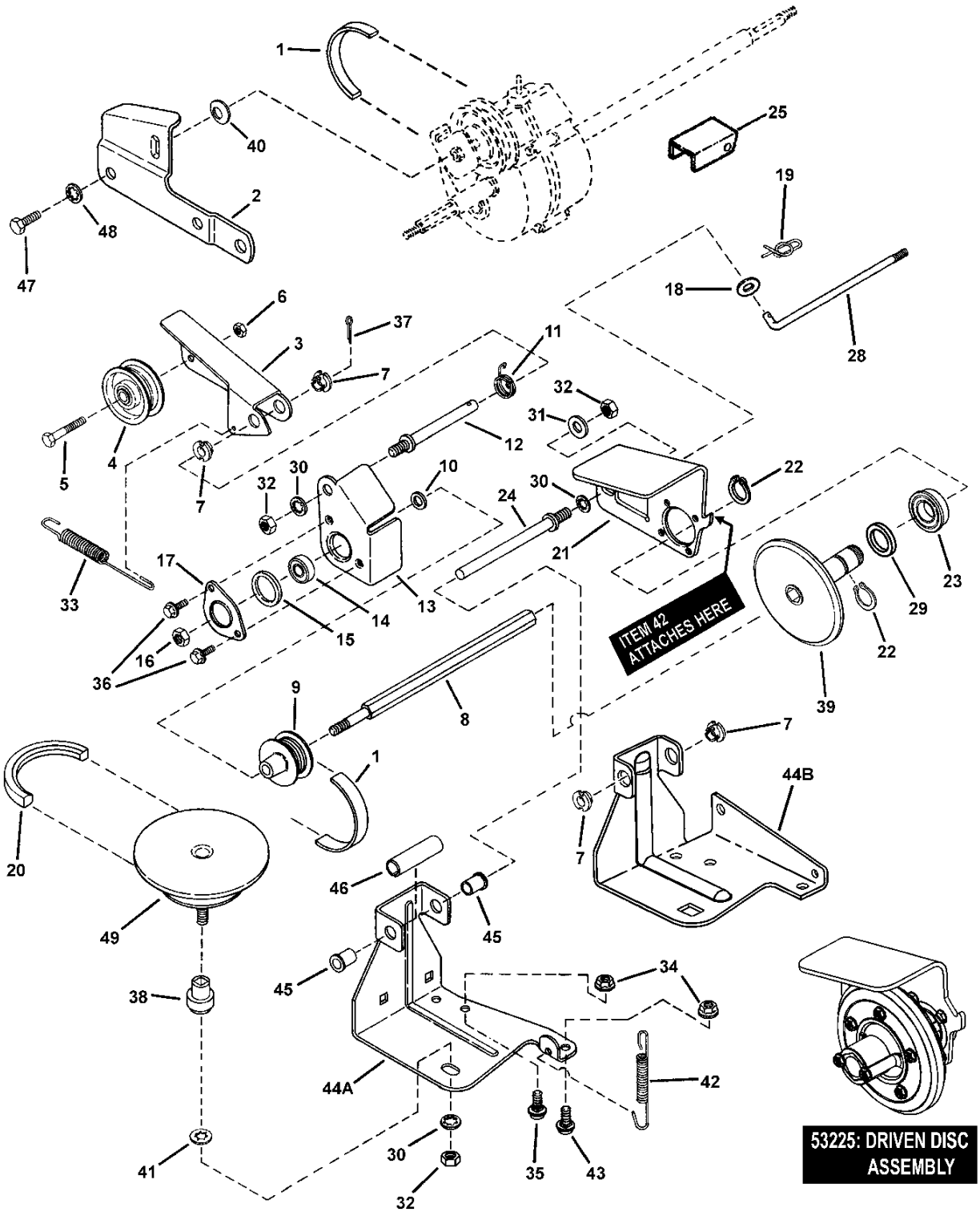
ITEM 42 ATTACHES HERE
53225: DRIVEN DISC ASSEMBLY

DRIVE SYSTEM SELF-PROPELLED

Item	Part No	Qty	Description	Note
37	90555	1	COTTER PIN, 3/32 x 1/2”	
38	17696	1	BUSHING, Powdered Metal	
39	41855	1	DISC, Driven (Cantilever)	
40	11724	1	WASHER, 44 x .78 x .025 Curved	
41	13847	1	RETAINER, 3/8” Bolt	
42	29025	1	SPRING, Wheel Drive	
43	91026	1	BOLT, 5/16-18 x 5/8” Short Neck Carriage GR5	
--	59462	1	ASSEMBLY, Deck Bracket (Incl. items 7 & 44A)	*RP216018KWV & RP217018BV*
--	52987	1	ASSEMBLY, Deck Bracket (Incl. items 44B, 45 & 46)	*P216518B, P216018KWV, P217018BV, P217018BVE, RP217018BVE, EP217018BV & ERP217018BV*
44A	31919	1	BRACKET, Deck, V21	
44B	33774	1	BRACKET, Deck, P21S	
45	12306	2	BUSHING, Flange, .381 x .625 x .62	
46	21758	1	SPACER, .500 x .65 x 1.75	
47	90534	1	SCREW, 5/16-18 x 1/2” Hex Head Cap, GR 5	
48	90391	1	WASHER, 5/16” Internal Tooth Lock	
49	61275	--	KIT, Drive Disc Assembly	*(Includes Drive Disc, item 38, bushing and 3/8-16 nut)*

Footnotes:

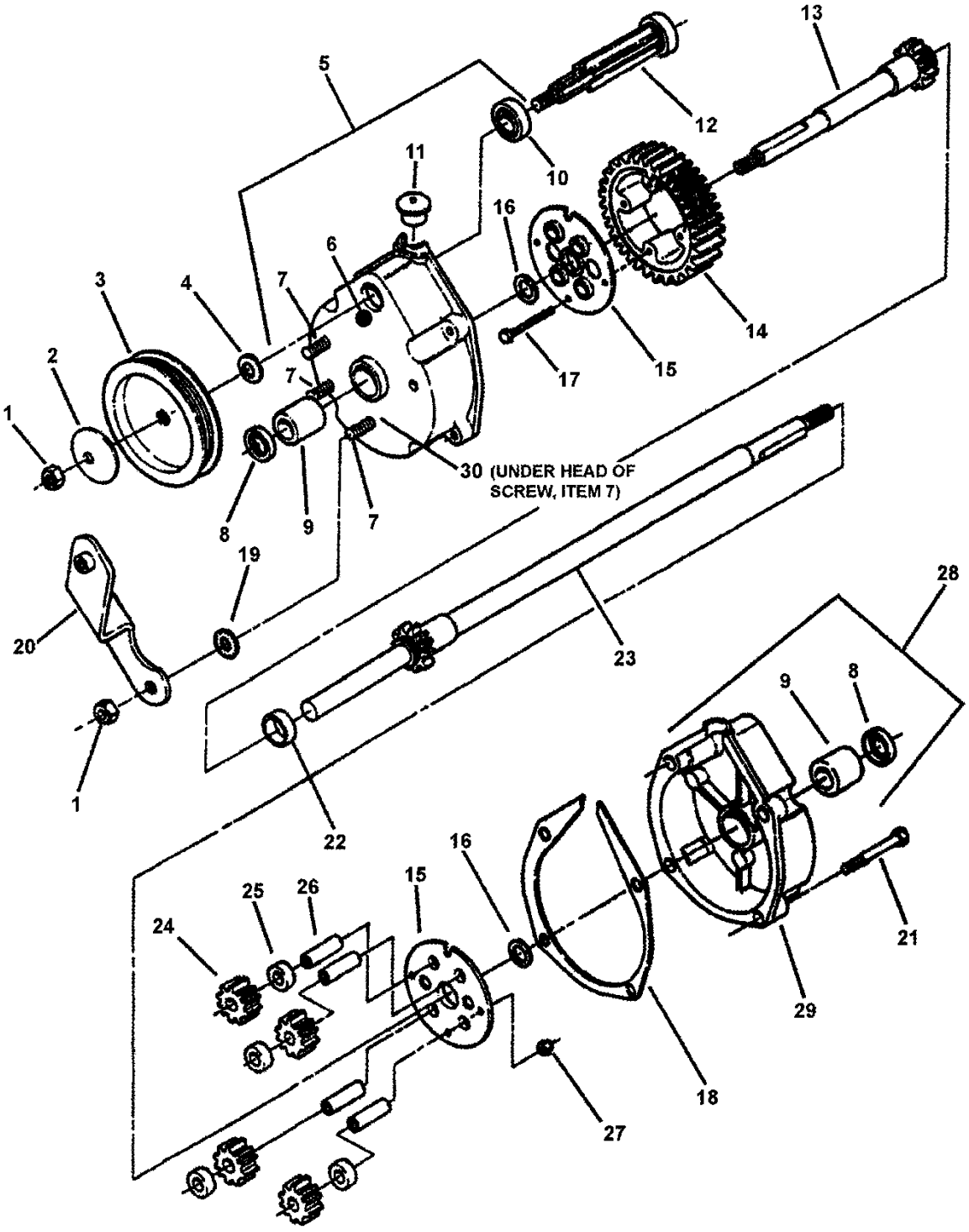
1
2
3
4
5
6
7
7
7
8
9
10
11
12
13
14
15
16
17
30 (UNDER HEAD OF SCREW, ITEM 7)
19
20
1
22
23
28
9
8
16
15
25
26
24
21
29
18
27

TRANSMISSION (DIFFERENTIAL)

Item	Part No	Qty	Description	Note
--	53943	1	ASSEMBLY, Transmission (Incl. items 1 thru 30)	*Self-Propelled Models*
1	92062	4	NUT, 5/16-18 Hex Lock	*was 11201*
2	92063	1	WASHER, Cone	
3	19213	1	PULLEY, Poly-V Belt (3.5 O.D.)	
4	11724	2	WASHER, 44 x .78 x .025 Curved	
5	53941	1	ASSEMBLY, Right Housing (Incl. items 6, 7, 8, 9, 10 & 30)	
6	29034	1	HOUSING, Right Side	
7	14155	3	SCREW, 5/16-24 x 1-1/8" Rib Neck, GR5	
8	12314	1	SEAL, 5/8" Internal Diameter	
9	29035	1	BEARING, Tapered- (Differential Housing)	
10	73963	1	BALL BEARING, 7/16 I.D., 1/1/8" O.D.	*was 11767*
11	16544	1	PLUG, Transmission Housing	
12	50767	1	GEAR, Input	
13	51932	1	AXLE, Short	
14	12495	1	GEAR, Differential (46 Tooth)	
15	31970	2	PLATE, 46T Gear	
16	31965	2	WASHER, Thrust, 3/4" I.D.	
17	90557	4	SCREW, #10-32 x 1-1/2" Hex Head Cap GR5	
18	11774	1	GASKET, Housing	
19	90189	3	WASHER, 5/16" Internal/External Tooth Lock	
20	51903	1	BRACKET, Differential	
21	92064	4	SCREW, 1/4-20 x 1" Hex Washer Self-Tap	
22	12543	1	SPACER, Axle Gear	
23	51933	1	ASSEMBLY, Long Axle	
24	21115	4	GEAR, Pinion (12 tooth)	
25	12500	4	SPACER, Pinion Gear	
26	11110	4	SHAFT, Pinion	
27	90376	4	NUT, #10-32 Hex Nyloc	
28	53938	1	ASSY, Left Housing (Phantom)	
29	29033	1	HOUSING, Left	
30	24442	3	GASKET, 5/8" O. D.	
--	61017	32oz.	"00" Grease	*not shown*

Footnotes:

NOTE: Transmission Assemblies 53928 & 53971 (Euro) are available & include Foot Guards.

NOTE: Maximum capacity of transmission case is 4 oz. DO NOT OVERFILL!

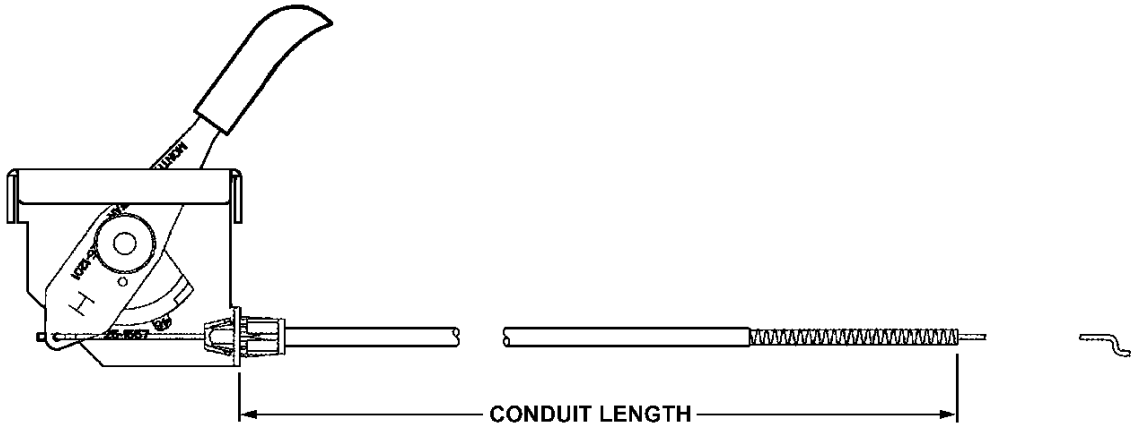

ENGINE SPECIFICATIONS

ENGINE H.P.	START TYPE	MANUFACTURER	MODEL	TYPE	USED ON:
6.0	ROPE	KAWASAKI	FJ180V	AS13-R	P216018KWV & RP216018KWV
6.5	ROPE	BRIGGS	123K02	0124-E1	216518B & P216518B
7.0	ELECTRIC	BRIGGS	128607	0113-E1	P217018BVE & RP217018BVE
7.0	ROPE	BRIGGS	128602	0112-E1	EP217018BV & ERP217018BV
7.0	ROPE	BRIGGS	128602	0149-E1	P217018BV & RP217018BV

Item	Part No	Qty	Description	Note
--	74460	1	THROTTLE CONTROL, .48 x .61	*Briggs models*
--	74138	1	THROTTLE CONTROL, 6.0 KWV	*Kawasaki models*

Footnotes:

conduit length: 48-1/2”
conduit length: 53-1/4”

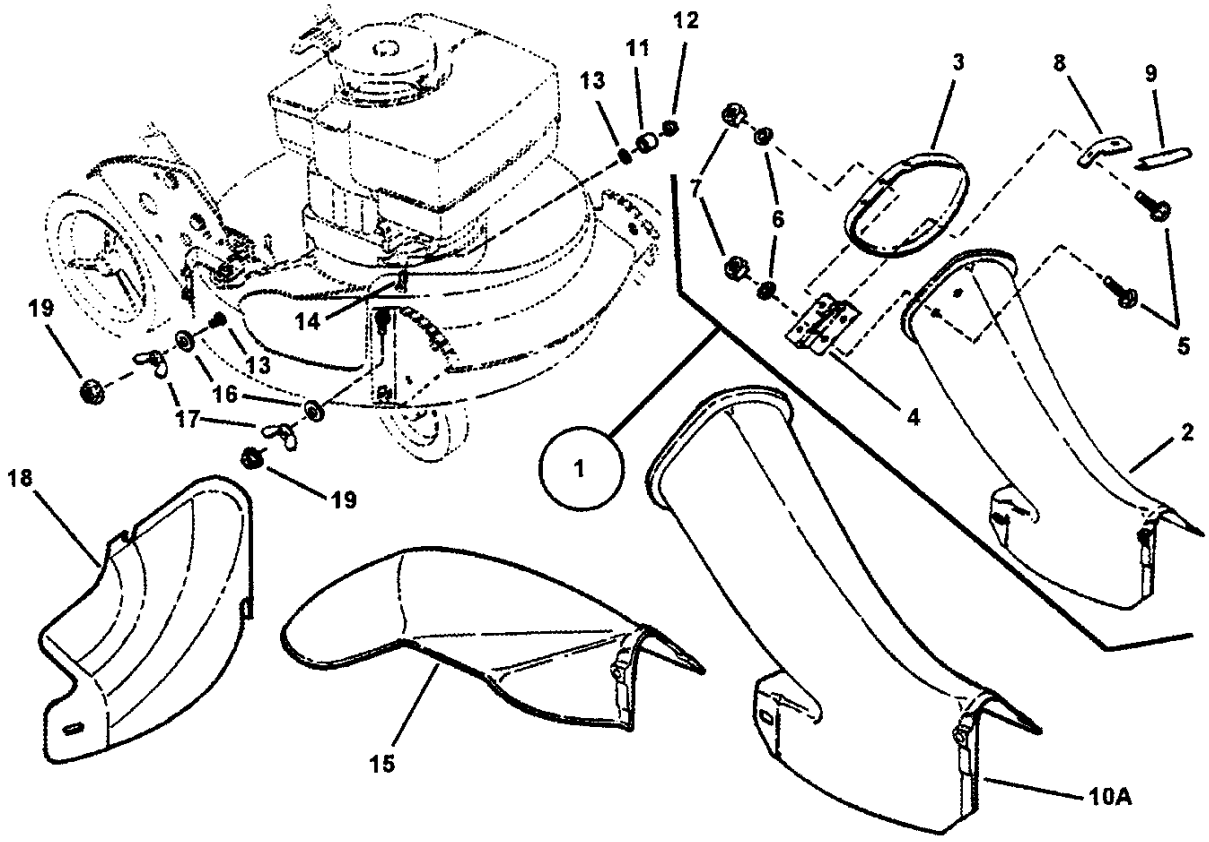
12
11
13
3
8
9
7
6
19
14
13
16
17
19
18
1
4
5
2
15
10A

SIDE CHUTE ADAPTER

Item	Part No	Qty	Description	Note
1	51951	1	ASSEMBLY, Bag Adapter & Cover (Euro models only)	*(Incl items 2 thru 9); used on EP217018BV & ERP217018BV*
2	16107	1	ADAPTER, Grass Bag	
3	19287	1	COVER, Bag Adapter	
4	23000	1	HINGE, Chute Cover	
5	91064	5	BOLT, 1/4-20 x 1/2” Short Neck Carriage, GR 5	
6	91023	5	WASHER, 1/4” Internal Tooth Lock	
7	91100	5	NUT, 1/4-20 Hex	
8	32661	1	STOP, Cover	
9	23042	1	MOULDING, Trim	
10A	16050	1	ADAPTER, Grass Bag	
10B	58037	1	ASSY, Grass Bag Adapter (see Grass Bag Accessory page)	
11	24340	1	SPACER, .316 I.D. x .375 O.D. x .310 thick	
12	90951	1	NUT, 5/16-18 Hex Large Flange Center Lock	
13	11791	1	RETAINER, 5/16” Bolt	
14	90001	2	BOLT, 5/16-18 x 3/4” Short Neck Carriage GR5	
15	42965	1	CHUTE, 21” Side	*P216018KWV*
16	91514	2	WASHER, 5/16” Flat	
17	24085	2	WING-NUT, 5/16-18 Nyloc	
18	29149	1	COVER, 21” Deck	*RP217018BV, RP217018BVE, RP216018KWV & ERP217018BV*
19	90951	2	NUT, 5/16-18 Hex Large Flange Center Lock	

Footnotes:

Note: For Grass Catcher components see Grass Bag Accessory page.

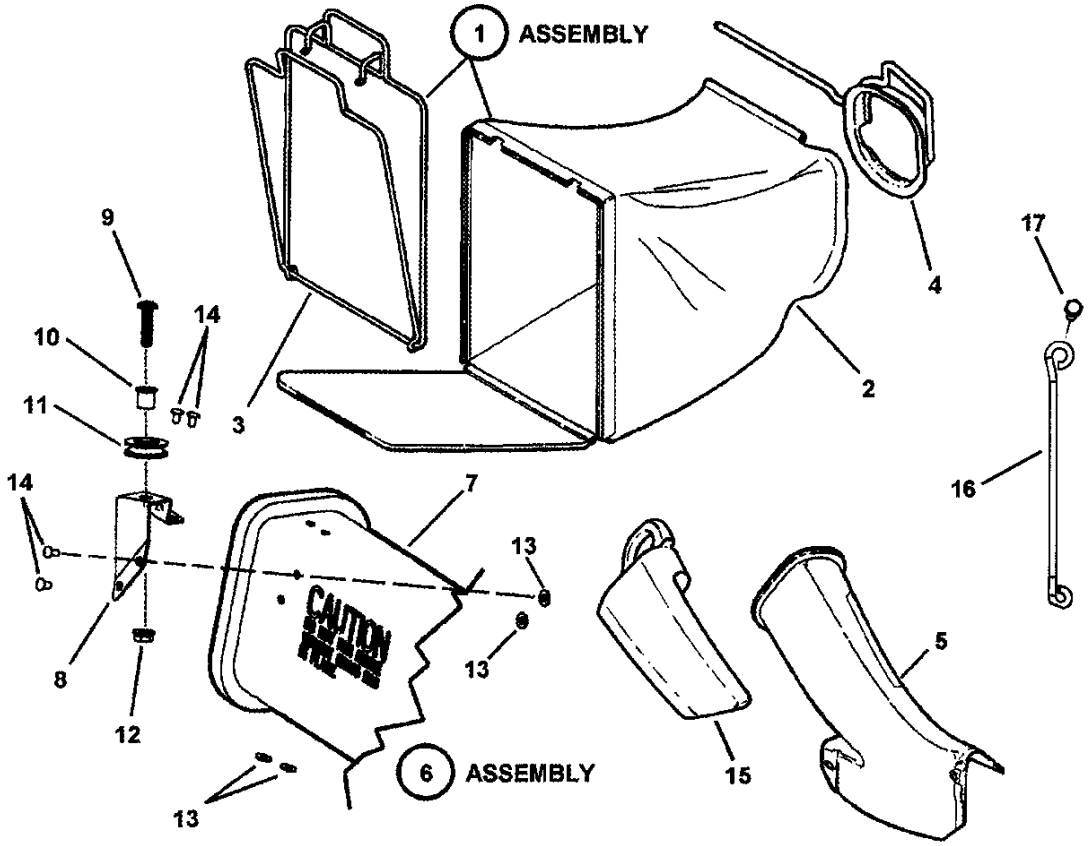
1 ASSEMBLY
2
3
4
5
6 ASSEMBLY
7
8
9
10
11
12
13
13
13
14
14
15
16
17
CAUTION

ACCESSORY GRASS BAG

Item	Part No	Qty	Description	Note
--	61824	--	KIT, Grass Bag Catcher	*Includes items 2 thru 5*
1	54058	--	ASSEMBLY, Grass Bag	*Includes items 2 thru 4*
2	75765	1	GRASS BAG (Door w/Gray Letters)	*all*
3	51906	1	ASSEMBLY, Bag Wire (12” Wide)	*all*
4	42489	1	CONNECTOR, Grass Bag (weldment)	*all*
5	16050	1	ADAPTER, Grass Bag	*used on Euro Self-Propelled models*
6	58037	1	ASSEMBLY, Grass Bag Adapter	*Includes items 7 thru 14*
7	47081	1	ADAPTER, Grass Bag	*used on Domestic Self-Propelled models*
8	47082	1	BRACKET, Rope Guide	
9	91984	1	SCREW, 5/16-18 x 1-1/4” Pan Head Machine	
10	12306	1	BUSHING, Flange, .381 x .625 x .62	
11	24228	1	PULLEY, Nylon	
12	91070	1	NUT, 5/16-18 Hex Flange Lock, GR 5	
13	72107	3	WASHER, 15/32” Flat	
14	13860	3	RIVET, 3/16 x .344	
15	16814	1	PLUG, Chute Adapter	*P216018KWV, P217018BV, P217018BVE & EP217018BV*
16	43327	1	BRACE, Bag Adapter	*P216018KWV & RP216018KWV*
17	78102	1	SCREW, M6 x 1.0 x 30MM Hex Head Cap	*P216018KWV & RP216018KWV*
18	78101	1	SLEEVE, .237/.242 I.D. x .3135/.3185 O.D. x .748	*not shown; P216018KWV & RP216018KWV*

Footnotes:

NOTE: Bag Assembly 58571 is composed of items 2, 3 and 4.

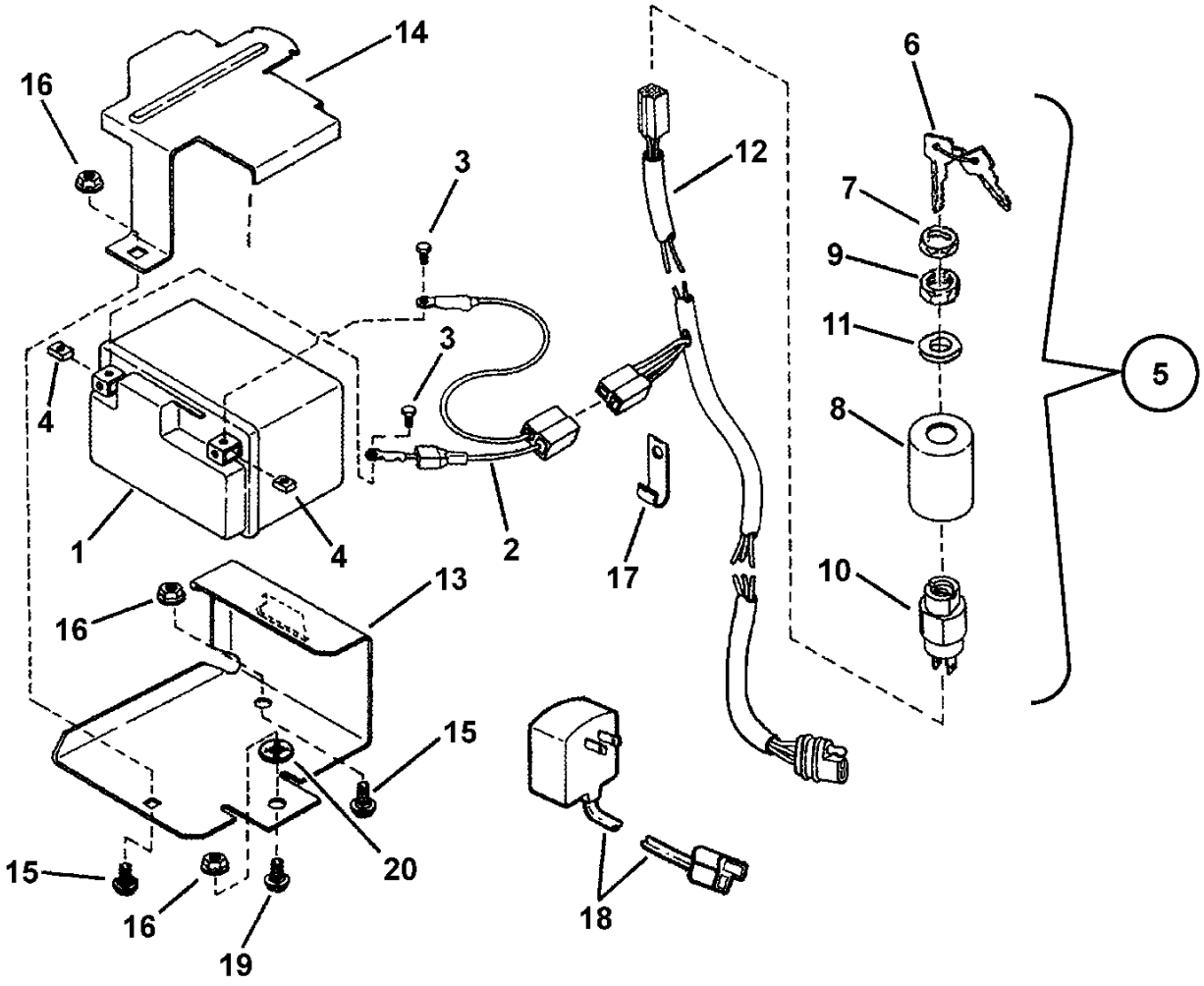

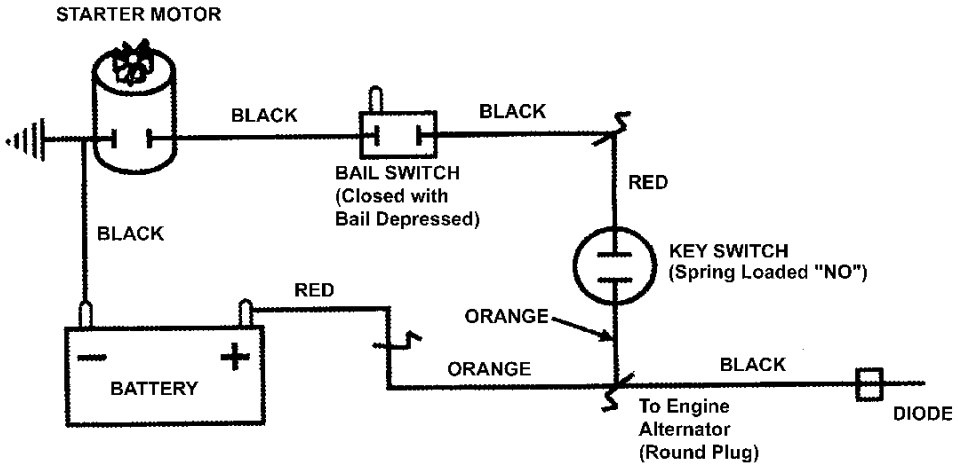

BATTERY WIRING SCHEMATIC FOR BRIGGS ENGINE

ELECTRIC START COMPONENTS

Item	Part No	Qty	Description	Note
--	67012	1	KIT, Battery 12V	*P217018BVE & RP217018BVE*
1	19763	1	BATTERY, 12 Volt, 35 CCA	
2	15488	1	HARNESS, Battery	
3	43977	2	SCREW, #10-24 x 1/2” Pan Head Machine	
4	90932	2	NUT, #10-24 Square	
5	--	1	SWITCH ASSEMBLY (Incl. items 6 thru 11)	*Not available as a part sale, order individual parts.*
6	11138	1	KEY (Set of Two)	
7	23506	1	BEZEL (Seal & Face Nut)	
8	29080	1	COVER, Switch	
9	12685	1	NUT, 5/8-32 Hex Lock	
10	28765	1	SWITCH, Ignition (spring loaded ON/OFF 2 prong)	
11	16132	1	SPACER	
12	78025	1	WIRING HARNESS, B&S WBM	*similar to 74383*
13	32906	1	BRACKET, Battery	
14	36132	1	COVER, Battery	
15	90731	2	BOLT, 5/16-18 x 1/2” Short Neck Carriage GR5	
16	90585	3	NUT, 5/16-18 Hex Flange Lock, GR5	
17	12652	1	CLIP, Wiring	
18	18834	1	CHARGER, Battery (120 Volt; 60 Hertz)	
--	18977	1	CHARGER, Battery (230 Volt; 50 Hertz)	
19	91026	1	BOLT, 5/16-18 x 5/8” Short Neck Carriage GR5	
20	11791	1	RETAINER, 5/16” Bolt	

Footnotes:

NOTE: For battery and charger kit order 61267.

Easy Speed
WARNING
GUARD OR ENTIRE GRASS CATCHER MUST BE INSTALLED BEFORE OPERATING MOWER
DANGER
KEEP HANDS and FEET AWAY
RUN
START
HI VAC
NINJA
MULCHING SYSTEM
SWAPPER
2004
AS MANUFACTURED THIS MOWER MEETS CPSC BLADE SAFETY REQUIREMENTS REQUIRED BY FEDERAL REGULATION "16 CFR PART 1205" PASSES ANSI-B71.1-1998 SAFETY STANDARD.
72921
WARNING
READ AND FOLLOW STARTING AND SAFETY INSTRUCTIONS IN THE OWNER'S MANUAL. IMPROPER USE OF PRODUCT CAN RESULT IN PERSONAL INJURY.
MADE IN USA
LWA
100dB
MODEL CERTIFIED BY INDEPENDENT LABORATORY
ANSI B71.1-2003 SAFETY STANDARD
WARNING
AVOID SERIOUS INJURY OR DEATH
READ THE OPERATOR'S MANUAL.
GO ACROSS SLOPES, NOT UP OR DOWN.
DO NOT MOW WHEN CHILDREN OR OTHERS ARE AROUND.
LOOK DOWN AND BEHIND BEFORE AND WHILE MOVING BACKWARDS.
REMOVE OBJECTS THAT COULD BE THROWN BY THE BLADE.
KEEP SAFETY DEVICES (GUARDS, SHIELDS, SWITCHES, ETC.) IN PLACE AND WORKING.
De machine niet gebruiken zonder de grasopvangzak of de beschermkap
Do not operate without entire Grass Catcher or Guard in place
Ne pas utiliser sans le bac de ramassage ou la projection en place
Betreiben Sie dieses Gerät nicht ohne Grasfangkorb oder Abdeckschutz
No manejar la máquina sin el recogedor o el protector en su lugar
Non utilizzarre senza il Raccoglitore dell'Erba o senza Protezione
STOP
1
2
3
4
5
6
7
8
9
10
11
12
13
14
15
16
17
18
19
20
21

DECALS

Item	Part No	Qty	Description	Note
1	29365	1	DECAL, Easy Walk	
2	75524	1	DECAL, Throttle Control, KWV	
3	75532	1	DECAL, Throttle Control, B&S	
4	75471	1	DECAL, Speed Shift	
5	46720	1	DECAL, Chute/Deflector	
6	75688	1	DECAL, Ignition Switch	
7	13010	1	DECAL, Danger, Cut Finger	
8	75750	1	DECAL, Hi Vac	
9	75619	1	DECAL, Ninja	
10	75618	1	DECAL, Snapper	
11	72921	1	DECAL, Warning (Deck)	
12	29490	1	DECAL, 2004 Year of Mfg.	
13	29776	1	DECAL,Euro Community (CE)	
14	29779	1	DECAL, Spart Plug International Symbol	
15	73462	1	DECAL, Caution, Symbols	
16	74135	1	DECAL, Noise (European)	
17	22841	2	DECAL, Warning (Euro)	
18	78022	1	DECAL, OPEI Walk/Ride	
19	46357	1	DECAL, Warning	
20	29784	2	DECAL, Deck/Chute International Warning	
21	29782	1	DECAL, OPC Bail (International Symbol)	
22	29470	1	DECAL, Patent Numbers	*not shown*

Footnotes:

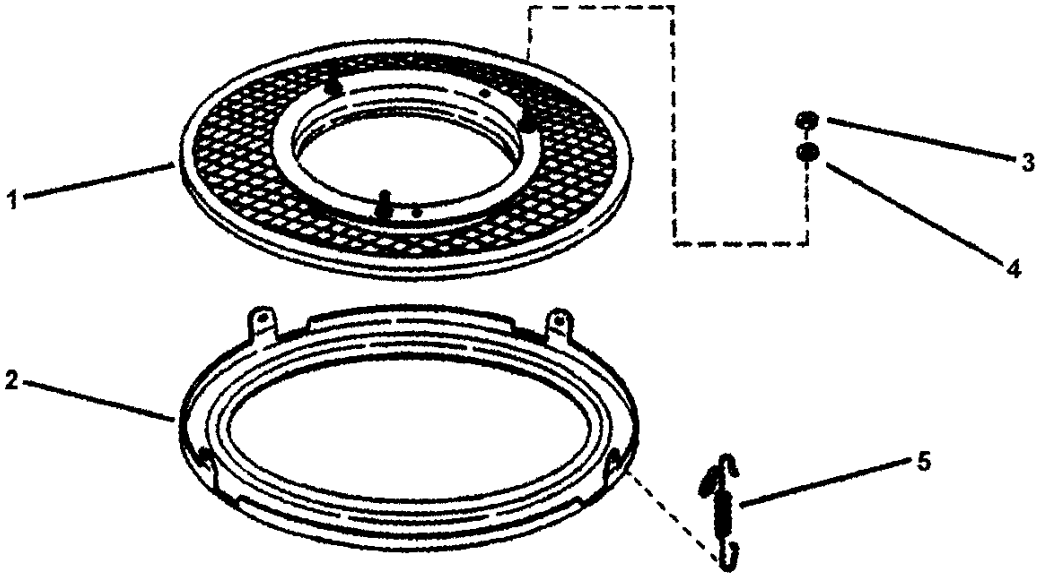
1
2
3
4
5

SNAPPERIZER ACCESSORY

Item	Part No	Qty	Description	Note
--	60440	--	KIT, Snapperizer (Incl. items 1 & 2 thru 5)	*(for Hi-Vac Rolled Under Lip type decks)*
--	63041	--	KIT, Snapperizer (Incl. items 1& 2A thru 5)	*(for "FR" type decks)*
1	51243	1	SCREEN, Fastener Assembly	
2	39579	1	RING, Bottom (21.77" Inside Diameter)	
2A	72002	1	RING, Bottom (22.60" Inside Diameter)	
3	90223	3	NUT, 5/16-24 Hex, GR5	*only 1 shown*
4	90187	3	WASHER, 5/16" Split Lock	*only 1 shown*
5	12587	3	SPRING	*only 1 shown*

Footnotes:

THATCHERIZER ASSEMBLY

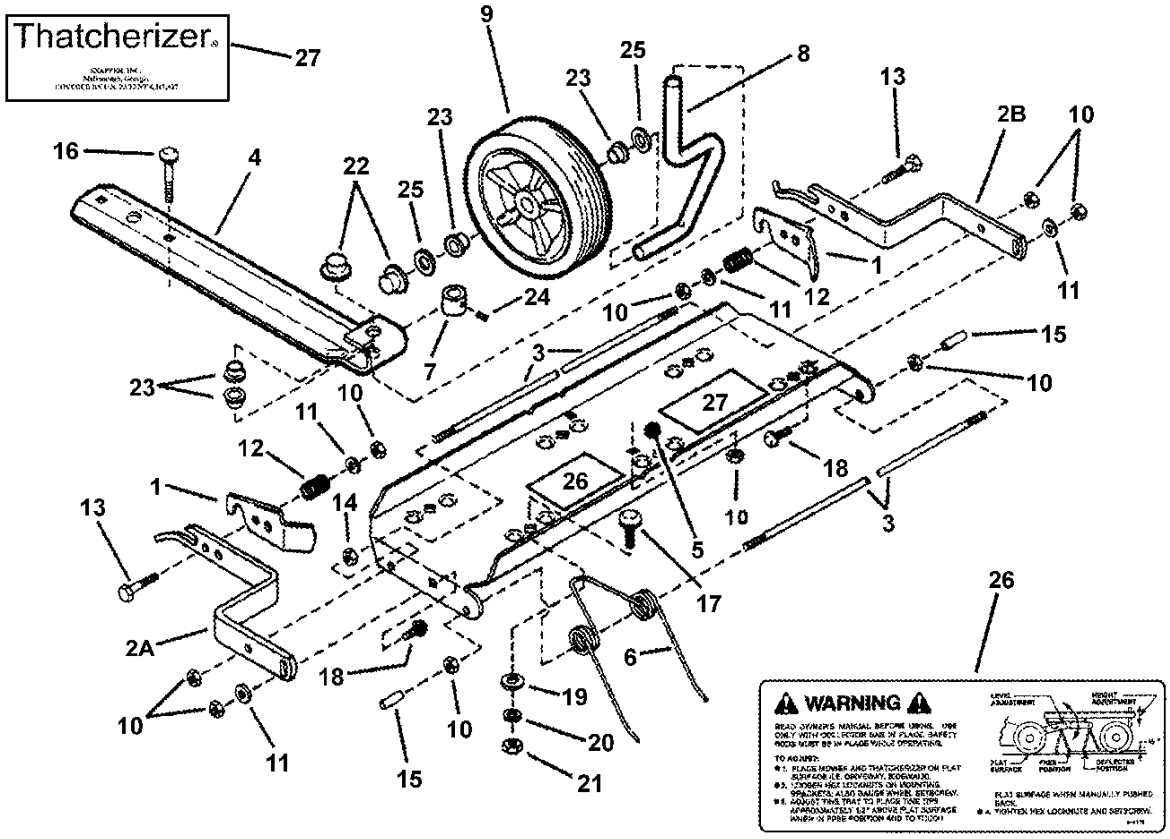

THATCHERIZER ASSEMBLY

Item	Part No	Qty	Description	Note
--	61256	--	KIT, Thatcherizer (Incl. items 1 thru 27)	
1	32891	2	LATCH, Frame Attachment	
2A	26572	1	BAR, Mount (Right Hand)	
2B	26573	1	BAR, Mount (Left Hand)	
3	18499	2	ROD, Tine	
4	18700	1	SUPPORT, Wheel	
5	19948	1	TRAY, Tine	
6	60574	6	KIT, Tine Thatching Spring	
7	14100	1	BUSHING, Wheel Adjuster	
8	18493	1	AXLE, Wheel	
9	18189	1	WHEEL, 7.00 x 1.50 Gage	
10	90761	10	NUT, 1/4-20 Hex Top Lock	*only 9 shown*
11	90055	4	WASHER, 1/4" Flat	
12	22425	2	SPRING, Compression	
13	90825	2	BOLT, 1/4-20 x 1-1/4" Hex, GR5	
14	90063	2	NUT, 1/4-20 Hex, GR5	
15	22424	2	CAP, Vinyl	
16	90015	2	BOLT, 1/4-20 x 2-1/2" Square Neck Carriage	*only 1 shown*
17	90383	6	BOLT, 5/16-18 x 1" Square Neck Carriage, GR5	*only 1 shown*
18	90074	2	BOLT, 1/4-20 x 3/4" Square Neck Carriage, GR5	
19	14098	6	WASHER, Reinforcing	*only 1 shown*
20	90187	6	WASHER, 5/16" Split Lock	*only 1 shown*
21	90196	6	NUT, 5/16-18 Hex, GR5	*only 1 shown*
22	14101	2	NUT, 1/2" Push	
23	14342	4	BEARING, Nyliner	
24	14103	1	SCREW, 5/16-18 x 1/4" Set	
25	90250	2	WASHER, 1/2" Flat	
26	14115	1	DECAL, Adjustment	
27	14062	1	DECAL, Thatcherizer	

Footnotes:

No Diagram Available

Parts List Only

RECYCLING KITS ACCESSORY

Item	Part No	Qty	Description	Note
--	61200	--	KIT, Recycling Cover (Includes the 2 items below)	*for 4HP & above engines*
--	29149	1	COVER, 21” Deck	
--	26407	1	BLADE, 21” Quad Edge Ninja	
--	61201	--	KIT, Recycling Plug (Incl. items 1 & 2 below)	*for 4HP & above engines*
--	16814	1	PLUG, Chute Adapter	
--	26407	1	BLADE, 21” Quad Edge Ninja	

Footnotes:

Parts Manual for

SNAPPER®

21" STEEL DECK WALK BEHIND MOWERS SERIES 18

IT IS THE POLICY OF SNAPPER TO IMPROVE ITS PRODUCTS WHENEVER IT IS POSSIBLE AND PRACTICAL TO DO SO. WE RESERVE THE RIGHT TO MAKE CHANGES OR ADD IMPROVEMENTS AT ANY TIME WITHOUT INCURRING ANY OBLIGATION TO MAKE SUCH CHANGES ON PRODUCTS MANUFACTURED PREVIOUSLY.

SNAPPER **McDonough, GA, 30253 U.S.A.**

COPYRIGHT © 2004
SNAPPER PRODUCTS, INC.
ALL RIGHTS RESERVED.

Revision IR, 11/16/2004

Manual No. 06139
TP 400-5047-IR-WB-N