Material No:	3404-437	**Rev:**	A	**Release/Change Authorization Number :**	5111391	CONFIDENTIAL
Description:	**PARTS LIST HARRIER 56 BBC [563:EN]**			**Issue Date :**	02/02/16	
HAYTER				**Supersedes :**		
				Superseded By :		
				Created By :	TH	
				Scale :	NONE	
General Document						

THIS UNPUBLISHED DOCUMENT CONTAINS HAYTER CONFIDENTIAL AND PROPRIETARY INFORMATION. IT MAY NOT BE WHOLLY OR PARTIALLY COPIED, DISCLOSED TO OTHERS, OR USED FOR ANY PURPOSE WITHOUT WRITTEN PERMISSION FROM HAYTER. IF PUBLICATION OCCURS, THE FOLLOWING NOTICE APPLIES: "© HAYTER ALL RIGHTS RESERVED".

Reason for Revision:	RELEASE TO PRODUCTION

HAYTER
MAKERS OF THE FINEST MOWERS
BY APPOINTMENT TO HER MAJESTY THE QUEEN MANUFACTURERS OF HORTICULTURAL MACHINERY HAYTER LIMITED
Hayter Ltd. Spellbrook, Bishop's Stortford, Herts, England. CM23 4BU
Tel: +44 (0)1279 723444 Fax: +44 (0)1279 723821

Harrier 56 BBC - Spare Parts List

Original Version: *EN*
Issue : *25/01/16*
Codes: *563J, HARRIER 56, AD,VS*
From Serial: *316000101 and up*

Upper Mainframe

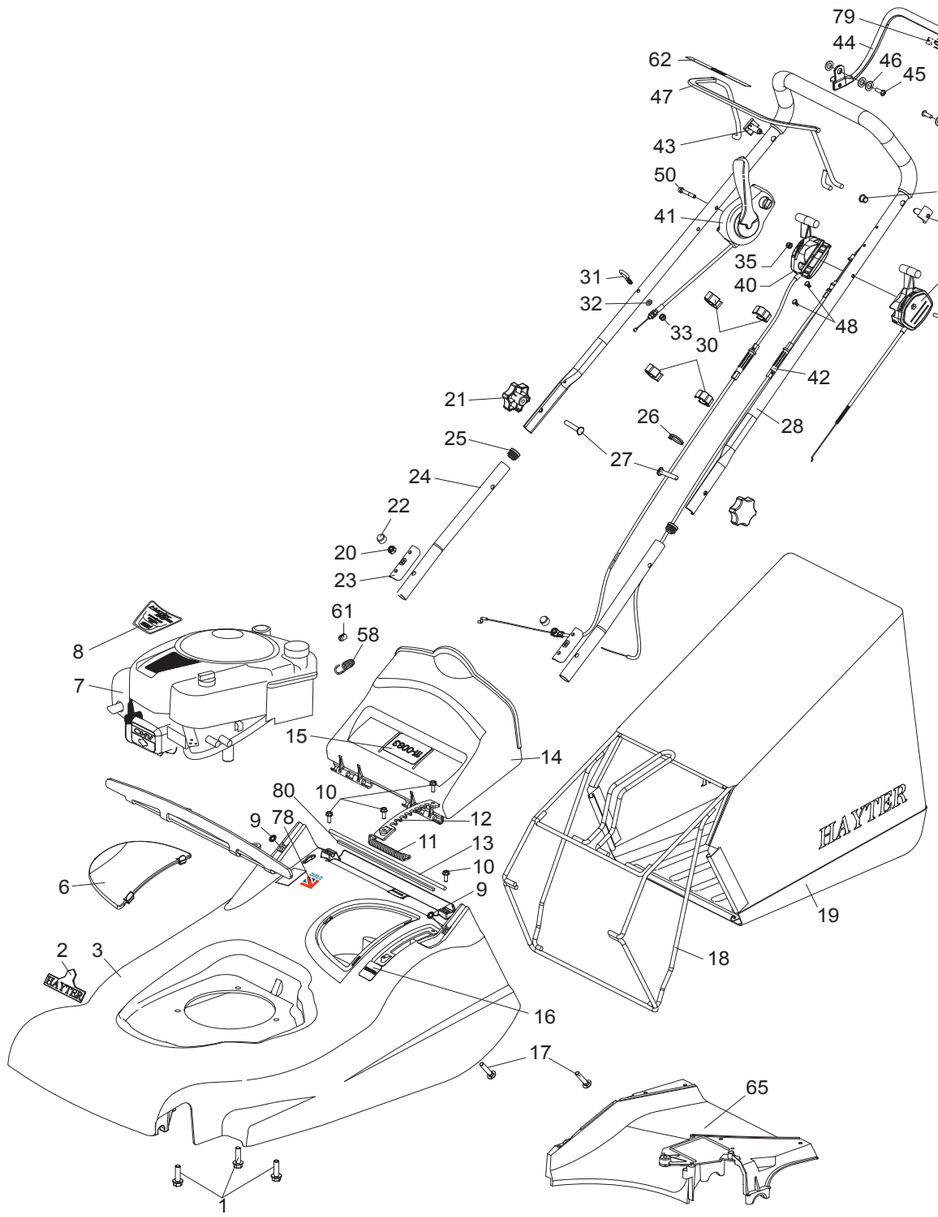

Upper Mainframe

Item No	Description	Part No.	QTY	Item Note
1	SCREW TAPTITE UNC 3/8"*1 1/4"	09349	3	
2	DECAL	410087	1	
3	DECK HARRIER *H56*	111-1723-08	1	
6	COVER BATTERY	560015	1	
7	ENGINE, B&S 850E RECOIL BBC	111-9694	1	
8	DECAL ENGINE - HARRIER 56BBC	111-3178	1	
9	GRIP FIX EXT 5/16"	04020	2	
10	SCREW TAPTITE M6*16	09365	4	
11	SPRING DEFLECTOR	410030	1	
12	RATCHET HOC PLATE	560018	1	
13	ROD DEFLECTOR	560017	1	
14	REAR DEFLECTOR	111-1714	1	
15	DECAL - SAFETY PETROL	111-0083	1	
16	LABEL HEIGHT OF CUT	320006	1	
17	BOLT COACH M8*40 GRADE 8.8	09379	2	
18	FRAME GRASSBAG	111-1497-03	1	
19	GRASSBAG	111-5339	1	
20	NUT M8 NYL INSERT T TYPE	09441	2	
21	KNOB M8 HANDLEBAR 1515	480088	2	
22	CAP FOR M8 NUT BLACK	HY234051	2	
23	HANDLEBAR CLAMP PLATE	340028	2	
24	LOWER HANDLEBAR	111-1384-03	2	
25	PLUG TUBE 7/8"*16g EP620/GL22	300160	2	
26	CABLE TIE	HY3966	1	
27	BOLT HANDLEBAR M8*45	HY226024	2	
28	UPPER HANDLEBAR MOULDED	111-3707	1	
30	GUIDE CABLE	410037	4	
31	GUIDE ROPE	305093	1	
32	WASHER PLAIN M6*12*1.6	09472	1	
33	NUT M6 NYLOC 'P' TYPE GD 8	09544	1	
34	SCREW SOC HD CAP M6*85	09685	1	
35	NUT M6 NYLOC 'T' TYPE	09438	1	
38	CONTROL THROTTLE STOP	111-3696	1	
40	CABLE VARIATOR	111-1194	1	
41	CONTROL 56 BBC	111-3661	1	
42	CABLE CLUTCH	111-1469	1	
43	PIN PIVOT	340182	2	
44	LEVER CLUTCH	111-1921-03	1	
45	SCREW DIA 6*20 PT PAN FLANGE	09687	2	
46	WASHER NYLON 19*11*1.6	09688	6	
47	BAILARM BBC	111-3270-03	1	
48	FASTENER DRIVE	300144	2	
49	BUSH CLUTCH LEVER	226034	1	
50	SCREW SOC HD CAP M6*45	ZCS1F045U	1	
58	SPRING CABLE ANCHOR	111-0527	1	
61	NIPPLE SPLIT	510118	1	
62	DECAL OPERATION	343019	1	
65	THROWPLATE	560011-03	1	
78	DECAL - MADE IN BRITAIN	111-7722	1	
79	DECAL - TRANSMISSION CONTROL	111-7853	1	
80	SEALING STRIP	111-8035	1	

Harrier 56 BBC - Spare Parts List

Lower Mainframe

Item No	Description	Part No.	QTY	Item Note
2	BRACKET BBC W/A	111-0180-03	1	
5	PULLEY 51MM PCD	111-0822	1	
6	UNDERDECK FIXED	111-1164	1	
7	UNDERDECK REMOVABLE	111-1163	1	
8	V BELT Z502	111-1254	1	
9	GEARBOX T/M 4002 EVO	111-3422	1	
10	BEARING 63001-2RS	111-1276	2	
11	LEVER VARIABLE SPEED *H56*	111-1398	1	
12	FRAME REAR ROLLER W/A *H56*	111-1485-03	1	
13	ROLLER BEARING	111-1492	2	
14	18T SPROCKET	111-1552	1	
15	DUST COVER BUSH	111-1860	2	
16	KEY WOODRUFF N DEG 505	1662	1	
17	PIN ROLL DIA 3/16* 3/4	03997	1	
18	WHEEL 180X45 RIBBED	111-1250	2	
18:1	BEARING 1/2 BALL URALAN	HY300154	2	
20	WASHER PLAIN 5/16*1*16G	09270	1	
22	SETSCREW M6*25	09364	2	
23	SCREW TAPTITE M6*16	09365	33	
24	NUT M8 NYL INSERT T TYPE	09441	1	
25	WASHER PLAIN M6*12*1.6	09472	2	
26	NUT M6 NYLOC 'P' TYPE GD 8	09544	2	
27	SCREW TAPTITE M6*16 C/SK POZI	09545	2	
28	SCREW TAPTITE M6*20 WASHER	09575	7	
29	SCREW TAPTITE M8*25 HEX W.HD	09787	1	
30	WASHER STARLOCK 5/16"	0201086	2	
31	PLATE SECURING	219037	1	
32	HUB CAP	111-1251	2	
34	OILITE BUSH ROLLER	340129	2	
35	ROLLER FREEWHEEL-ROCKET BRAND	340150	2	
36	SPACER STEEL 49*41.5*2	340157	1	
37	LOCKNUT	340163	1	
38	SHROUD - FREEWHEEL	340168	1	
39	SPRING BLADE BRAKE TENSION	343011	1	
40	CUTTERBAR BBC 22"	343034	1	
41	HOUSING - PIVOT BEARING LH	410048	2	
42	SPRING COUNTER BALANCE	410050	1	
44	BEARING FRONT AXLE	410069	2	
45	M6 LUG NUT	410076	4	
46	PULLEY VARIATOR ASSEMBLY	411001	1	
47	SPROCKET GEARBOX 10T*3/8"	411011	1	
48	COVER DRIVE	411013	1	
49	CHAIN 40 PITCHES 3/8" INC LINK	411016	1	
50	BELT VARIATOR 520	411024	1	
52	BUSH PIVOT	411031	1	
53	BRACKET CABLE	HY412003	1	
54	SPRING VARIATOR	HY412004	1	
55	SPRING TORSION HOC GALVANISED	480132	1	
56	KNOB HOC	480134	1	
57	FRONT AXLE W/A HARRIER 56	560008	1	
59	FRONT FINS	560014	1	
60	CLAMP UNDERDECK	560027	1	

Lower Mainframe

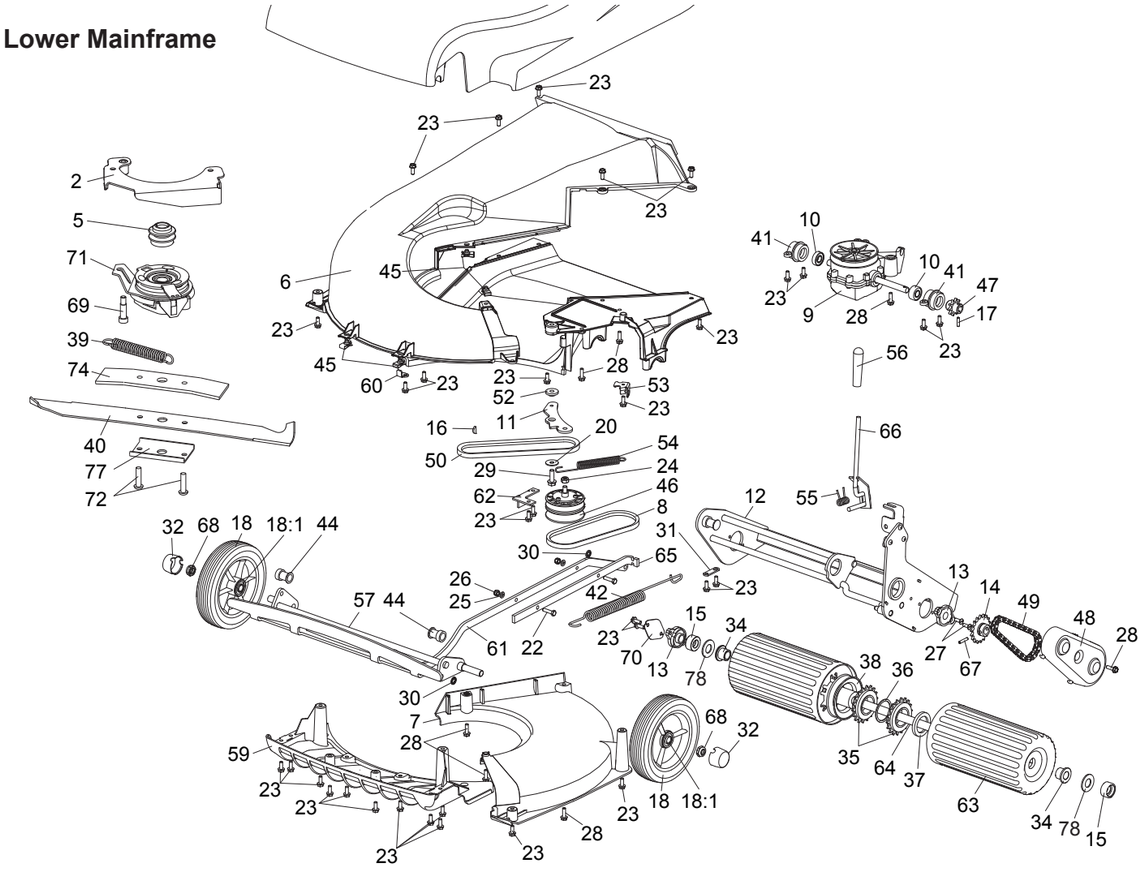

Lower Mainframe

Item No	Description	Part No.	QTY	Item Note
61	CONN ROD W/A	560028	1	
62	BRACKET CONN ROD	560029	1	
63	ROLLER REAR W/A HARRIER 56	560031W	2	
64	ROLLER SHAFT WA *H56*	111-1717	1	
65	BAR SPRING TENSION	560037	1	
66	HOC LEVER W/A	560046	1	
67	PIN SELLOC SPRING 3/16"*1 HD	HY03354	1	
68	NUT UNF 1/2"NYLOC EXT THIN5/16	HY4486	2	
69	SCREW SOC SHLD M10* DIA 12*30 RAW	ZIS8L030S	1	
70	DUST COVER PLATE	111-1861	1	
71	WARNER BBC 5915-24	485007	1	
72	SCREW SOC HD CAP M10*35	09717	2	
74	FORMER BBC BLADE (BLACK)	111-7433	1	
77	PLATE CLAMP BBC (BLACK)	111-2950 - 03	1	
78	WASHER DIA 16.5x30x1 PLAIN STEEL	480097	2	