HAYTER
MAKERS OF THE FINEST MOWERS

Harrier 41 - Parts List

Codes 410G, 412G and 413G

English Version : Issue : 06.06.09

Codes:	From Serial
410G	290000001
412G	290000001
413G	290000001

Upper Mainframe

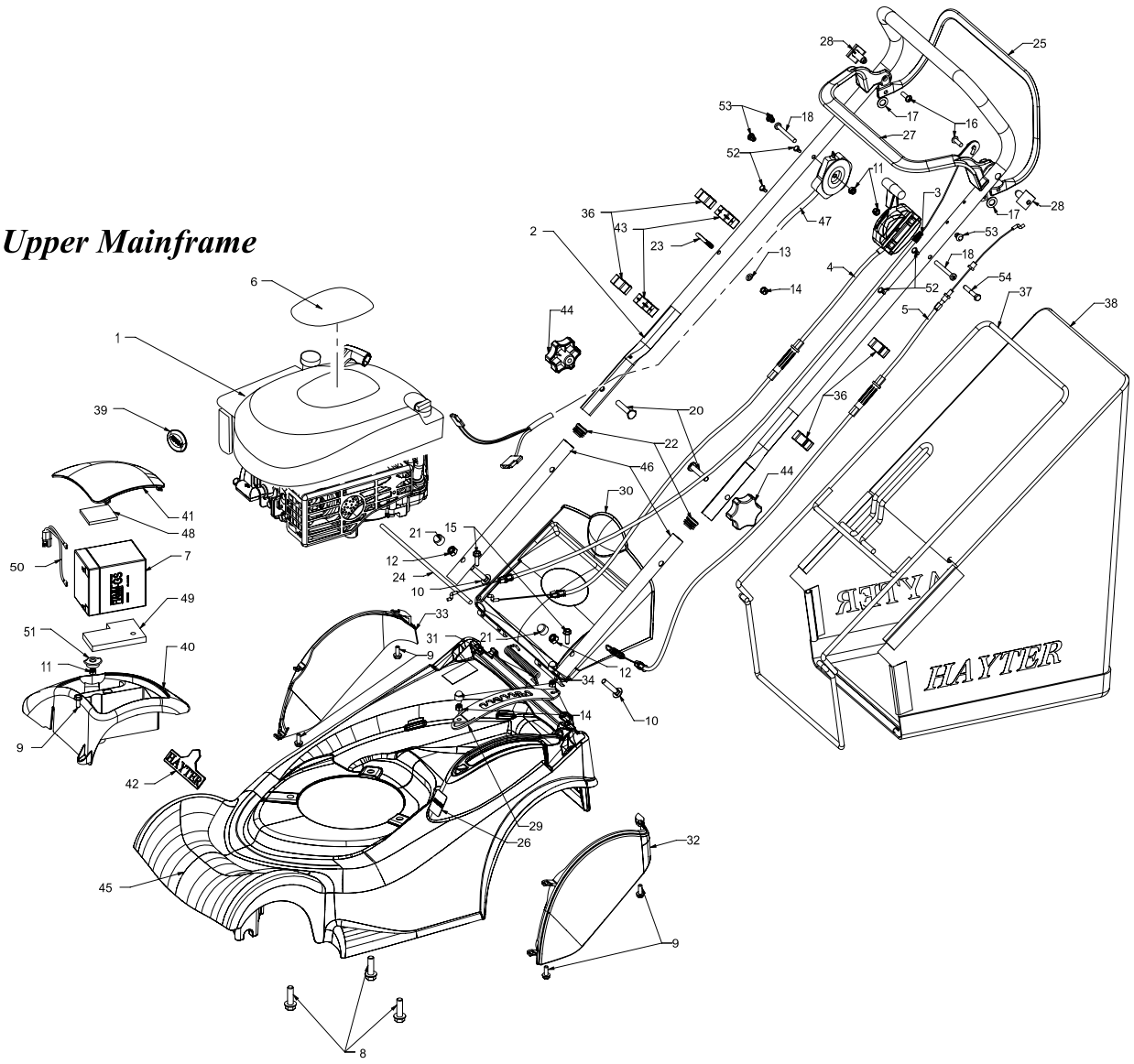

Upper Mainframe

Item No	Description	Part No.	QTY	410	412	413	Item Note
1	ENGINE B&S SERIES 650 XVB COVE	111-3071	1	+	.	+	
1	ENGINE B&S SERIES 650 XVB COVE	111-3072	1	.	+	.	
2	UPPER HANDLEBAR	305145W	1	+	+	+	
3	CABLE ENGINE BRAKE V/S	111-1094	1	+	.	.	
3	CABLE ENGINE BRAKE - VS	560041	1	.	+	+	
4	CABLE VARIATOR	111-1150	1	.	+	+	
5	CABLE CLUTCH V/S	111-1151	1	.	+	+	
6	DECAL ENGINE HARRIER 41 (RS)	111-3151	1	+	+	+	
7	BATTERY 12V	111-1926	1	.	+	.	
8	SCREW TAPTITE UNC 3/8"*1 1/4"	09349	3	+	+	+	
9	SCREW TAPTITE M6*16	09365	5	+	+	+	
10	BOLT COACH M8*40 GRADE 8.8	09379	2	+	+	+	
11	NUT M6 NYLOC 'T' TYPE	09438	2	+	+	+	
12	NUT M8 NYL INSERT T TYPE	09441	2	+	+	+	
13	WASHER PLAIN M6*12*1.6	09472	1	+	+	+	
14	NUT M6 NYLOC 'P' TYPE GD 8	09544	3	+	+	+	
15	SCREW TAPTITE M6*20 WASHER	09575	2	+	+	+	
16	SCREW DIA 6*20 PT PAN FLANGE	09687	2	+	+	+	
17	WASHER NYLON 19*11*1.6	09688	6	+	.	.	
17	WASHER NYLON 19*11*1.6	09688	2	.	+	+	
18	SETSCREW M6*55 POSI PAN Z ANDP	09780	1	.	+	+	
20	BOLT HANDLEBAR M8*45	HY226024	2	+	+	+	
21	CAP FOR M8 NUT BLACK	HY234051	2	+	+	+	
22	PLUG TUBE 7/8"*16g EP620/GL22	300160	2	+	+	+	
23	GUIDE ROPE	305093	1	+	+	+	
24	DEFLECTOR PIN 6.35*295	305103	1	+	+	+	
25	LEVER CLUTCH (BLACK)	111-1921-03	1	.	+	+	
26	LABEL HEIGHT OF CUT	320006	1	+	+	+	
27	LEVER ENGINE	340179	1	+	+	+	
28	PIN PIVOT	340182	2	+	+	+	
29	RATCHET HOC	HY410006	1	+	+	+	
30	DEFLECTOR REAR	410028	1	+	+	+	
31	SPRING DEFLECTOR	410030	1	+	+	+	
32	WHEEL COVER LH	410032	1	+	+	+	
33	WHEEL COVER RH	410033	1	+	+	+	
34	NUT CAP PLASTIC M6	343025	2	+	+	+	
36	GUIDE CABLE	410037	2	+	.	+	
37	FRAME GRASSBAG	410038W	1	+	+	+	
38	FABRIC GRASSBAG	410039	1	+	+	+	
39	DECAL GRASS BLADE	410064	1	+	+	+	
40	BOX BATTERY	410080	1	+	+	+	
41	LID BATTERY BOX	410081	1	+	+	+	
42	DECAL-HAYTER (LOGO (03))	410087	1	+	+	+	
43	GUIDE CABLE	HY412008	2	.	+	.	
44	KNOB M8 HANDLEBAR	480088	2	+	+	+	
45	MAINFRAME	410010V	1	+	+	+	
46	HANDLEBAR LOWER	410034W	2	+	+	+	
47	SWITCH AND LOOM ASM H41 (RS)	111-3154	1	.	+	.	
48	FOAM PAD TOP	HY412012	1	.	+	.	
49	FOAM PAD BOTTOM	HY412013	1	.	+	.	
50	LEAD, BATTERY	HY412014	1	.	+	.	
51	CAP BATTERY BOX	410094	1	.	+	.	
52	FASTENER DRIVE	300144	4	+	+	+	
53	FASTENER DRIVE 6.5	341033	2	+	+	+	
54	BOLT M6*40	ZBH1F040U	1	+	.	.	

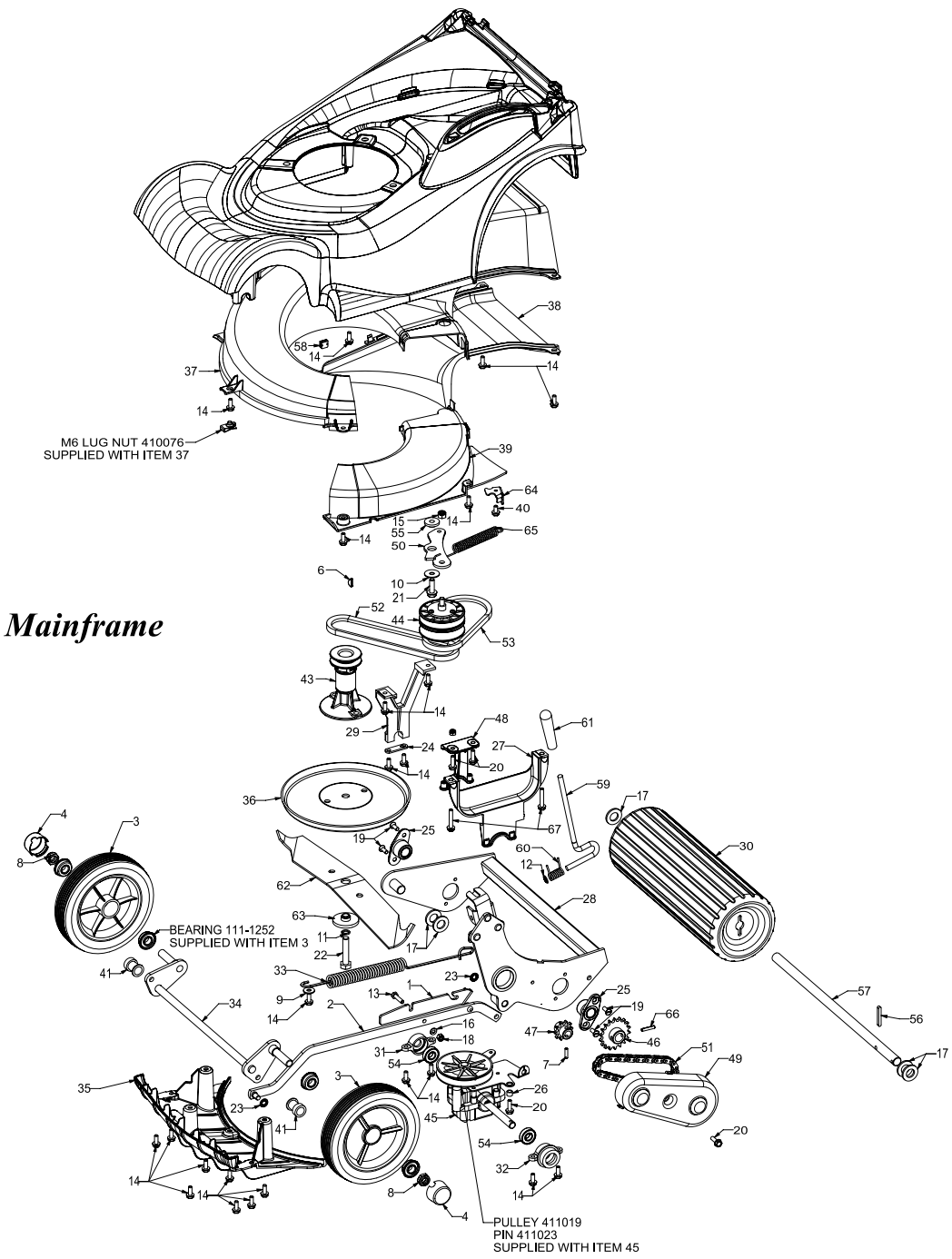

Lower Mainframe

Lower Mainframe

Item No	Description	Part No.	QTY	410	412	413	Item Note
1	SPRING MOUNT	111-0073	1	+	+	+	
2	CONNECTING ROD WA	111-1050	1	+	+	+	
3	WHEEL 180X45 RIBBED	111-1250	2	+	+	+	
4	HUB CAP	111-1251	2	+	+	+	
6	KEY WOODRUFF N DEG 505	1662	1	+	+	+	
7	PIN ROLL DIA 3/16* 3/4	03997	1	.	+	+	
8	NUT UNF 1/2"NYLOC EXT THIN5/16	HY4486	2	+	+	+	
9	WASHER 1/4*3/4 GALV ROOFING	09262	1	+	+	+	
10	WASHER PLAIN 5/16*1*16G	09270	1	.	+	+	
11	WASHER SPRING 3/8 SC	09273	1	+	+	+	
12	GRIP FIX EXT 5/16"	04020	1	+	+	+	
13	SETSCREW M6*25	09364	1	+	+	+	
14	SCREW TAPTITE M6*16	09365	22	+	.	.	
14	SCREW TAPTITE M6*16	09365	24	.	+	+	
15	NUT M8 NYL INSERT T TYPE	09441	1	.	+	+	
16	WASHER PLAIN M6*12*1.6	09472	1	+	+	+	
17	WASHER M16 PLAIN	09491	5	+	+	+	
18	NUT M6 NYLOC 'P' TYPE GD 8	09544	1	+	+	+	
19	SCREW TAPTITE M6*16 C/SK POZI	09545	4	+	+	+	
20	SCREW TAPTITE M6*20 WASHER	09575	1	+	.	.	
20	SCREW TAPTITE M6*20 WASHER	09575	4	.	+	+	
21	SCREW TAPTITE M8*25 HEX W.HD	09787	1	.	+	+	
22	BOLT UNF 3/8*3.1/4	09788	1	+	+	+	
23	WASHER STARLOCK 5/16"	201086	2	+	+	+	
24	PLATE SECURING	219037	1	+	+	+	
25	HOUSING BEARING ROLLER	219102	2	+	+	+	
26	BUSH DIA 6.3* DIA 9.5*7	340154	1	.	+	+	
27	BRACKET - PIVOT LH	HY410002	1	+	+	+	
28	FRAME REAR ROLLER W/A	410011W	1	+	+	+	
29	BRACKET- ROLLER FRAME PIVOT RH	410016	1	+	+	+	
30	ROLLER HARRIER 41	410044	1	+	+	+	
31	HOUSING - GEARBOX BEARING RH	410047	1	.	+	+	
32	HOUSING - PIVOT BEARING LH	410048	1	+	+	+	
33	SPRING COUNTER BALANCE	410050	1	+	+	+	
34	AXLE FRONT W/A - H41	410051	1	+	+	+	
35	FINS	410055	1	+	+	+	
36	FRICTION DISC	410057W	1	+	+	+	
37	CHUTE	410058	1	+	+	+	
38	THROWPLATE	410059	1	+	+	+	
39	UNDERDECK COVER	410060	1	+	+	+	
40	SCREW TAPTITE M6*12 W/HD	9546	1	.	+	+	
41	BEARING FRONT AXLE	410069	2	+	+	+	
43	CARRIER BLADE BOSS - DIE CAST	410078	1	+	+	+	
44	PULLEY VARIATOR ASSEMBLY	411001	1	.	+	+	
45	GEARBOX	411002	1	.	+	+	
46	SPROCKET ROLLER 18T*3/8"	411010	1	.	+	+	
47	SPROCKET GEARBOX 10T*3/8"	411011	1	.	+	+	
48	SUPPORT - GEARBOX RH	411012	1	.	+	+	
49	COVER DRIVE	411013	1	+	+	+	
50	LEVER VARIABLE PULLEY	411014	1	.	+	+	
51	CHAIN 40 PITCHES 3/8" INC LINK	411016	1	.	+	+	
52	BELT VARIATOR 520	411024	1	.	+	+	
53	BELT VARIATOR 450	411025	1	.	+	+	
54	BEARING 6001-2RS	411027	2	.	+	+	
55	BUSH PIVOT	411031	1	.	+	+	
56	KEY 3/16"*3/16"*1 1/2" 2R END	411037	1	+	+	+	
57	SHAFT ROLLER	411038	1	+	+	+	
58	FASTENER PANEL EDGE	410082	1	+	+	+	

Harrier 41 - Parts List

Codes 410G, 412G and 413G

Lower Mainframe

Item No	Description	Part No.	QTY	410	412	413	Item Note
59	LEVER HOC	480128	1	+	+	+	
60	SPRING TORSION HOC GALVANISED	480132	1	+	+	+	
61	KNOB HOC	480134	1	+	+	+	
62	CUTTERBAR 16"	HY201026	1	+	+	+	
63	DISTANCE PIECE CUTTERBAR	HY4014	1	+	+	+	
64	BRACKET CABLE	HY412003	1	.	+	+	
65	SPRING VARIATOR	HY412004	1	.	+	+	
66	PIN SELLOC SPRING 3/16"*1 HD	HY03354	1	.	+	+	
67	SCREW TAPTITE M6*35 HEX W.HD	09786	2	+	+	+	
68	BEARING	111-1252	4	+	+	+	2 PER WHEEL, NOT SHOWN
69	PIN	411023	1	+	+	+	NOT SHOWN
70	PULLEY	411019	1	+	+	+	NOT SHOWN

Harrier 41 - EC Declaration Of Conformity

EC DECLARATION OF CONFORMITY

Manufactured by: HAYTER LIMITED,
Address: Spellbrook, Bishop's Stortford, Herts. CM23 4BU. ENGLAND

declare that the lawnmower :

Model name:	**Harrier 41 Push**	**Harrier 41 Autodrive E/S V/S**	**Harrier 41 Autodrive V/S**
Type:	Pedestrian rotary	Pedestrian rotary	Pedestrian rotary
Model No:	CODE 410G	CODE 412G	CODE 413G
Cutting width:	41 cm	41 cm	41 cm
Speed of rotation of the cutting device:	2750 rpm	2750 rpm	2750 rpm
Engine manufacturer:	Briggs and Stratton	Briggs and Stratton	Briggs and Stratton
Speed of rotation of engine:	2750 rpm	2750 rpm	2750 rpm

Complies with the provisions of Directive: 98/37/EC Essential Health & Safety Requirements Relating to the Design & Construction of Machinery and Safety Components, as amended and the regulations transposed into national law.

Also Directive 89/336/EEC Electromagnetic Compatibility, as amended and the regulations transposed into national law.

Also Directive 2000/14/EC Noise emission in the environment by equipment for use outdoors, as amended and the regulations transposed into national law.
Procedure applied for the conformity assessment: ANNEX VI, procedure 1.

Notified Body: Sound Research Laboratories Ltd. Holbrook House, Little Waldingfield,
Sudbury, Suffolk. CO10 0TH. ENGLAND
Notified body identification No: 1088

Measured sound power level:	95 dB(A)	95 dB(A)	95 dB(A)
Guaranteed sound power level:	96 dB(A)	96 dB(A)	96 dB(A)

Complies with harmonized standards: EN 292, EN 836 and EN ISO 14982

Signed

S.A Maryniak
(Technical Director)

Date: 04.08.04
Declaration done and technical documentation kept at:
HAYTER LIMITED
Spellbrook, Bishop's Stortford,
Herts. CM23 4BU ENGLAND

VIBRATION INFORMATION

The vibration level at the operator contact positions, measured in accordance with European Standard EN 836

CODE **410G= 5.2 ms^{-2}** CODE **412G = 5.2 ms^{-2}** CODE **413G = 5.2 ms^{-2}**