42" XRD Deck

Parts List

Model:

20100050

366020300E • Jun 2017

Model

Model 20100050 (42" XRD Deck)
42" Mower Deck
Serial No. A0328980 +

Table of Contents

Deck Hanger 3
Deck, Spindles and Belts 4
Pulleys and Idlers 5
Guards 6
Anti-Scalp Wheels 7

© Copyright 2017 Ariens Company

DECK HANGER

Model 20100050

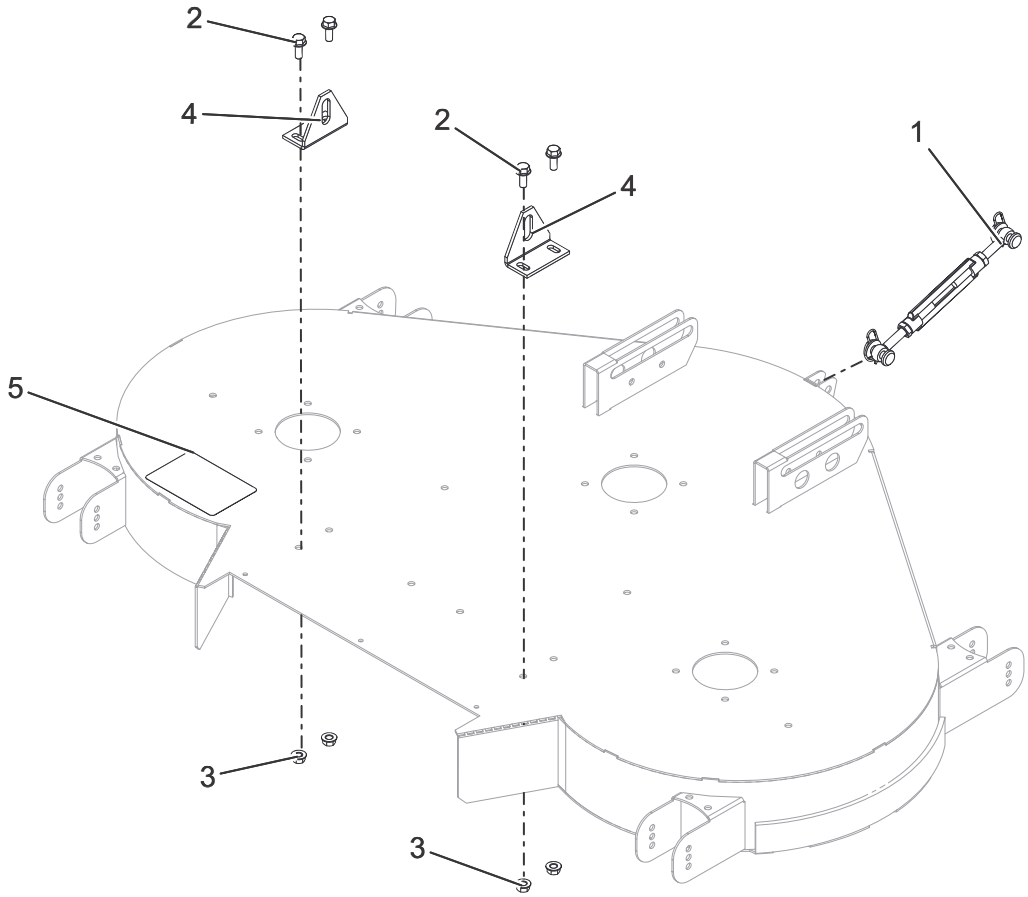

BOM ID	Number	Qty	Description
1	409436900	1	ASM, DECK TENSION ADJUSTMENT - SHORT
2	019483600	4	M8 x 20 Flange Bolt
3	049383700	4	NUT, FLANGED M8
4	541039100	2	DECK, REAR HANGING BRACKET
5	358098300	1	DECAL, DECK SAFETY WARNING

DECK, SPINDLES AND BELTS

Model 20100050

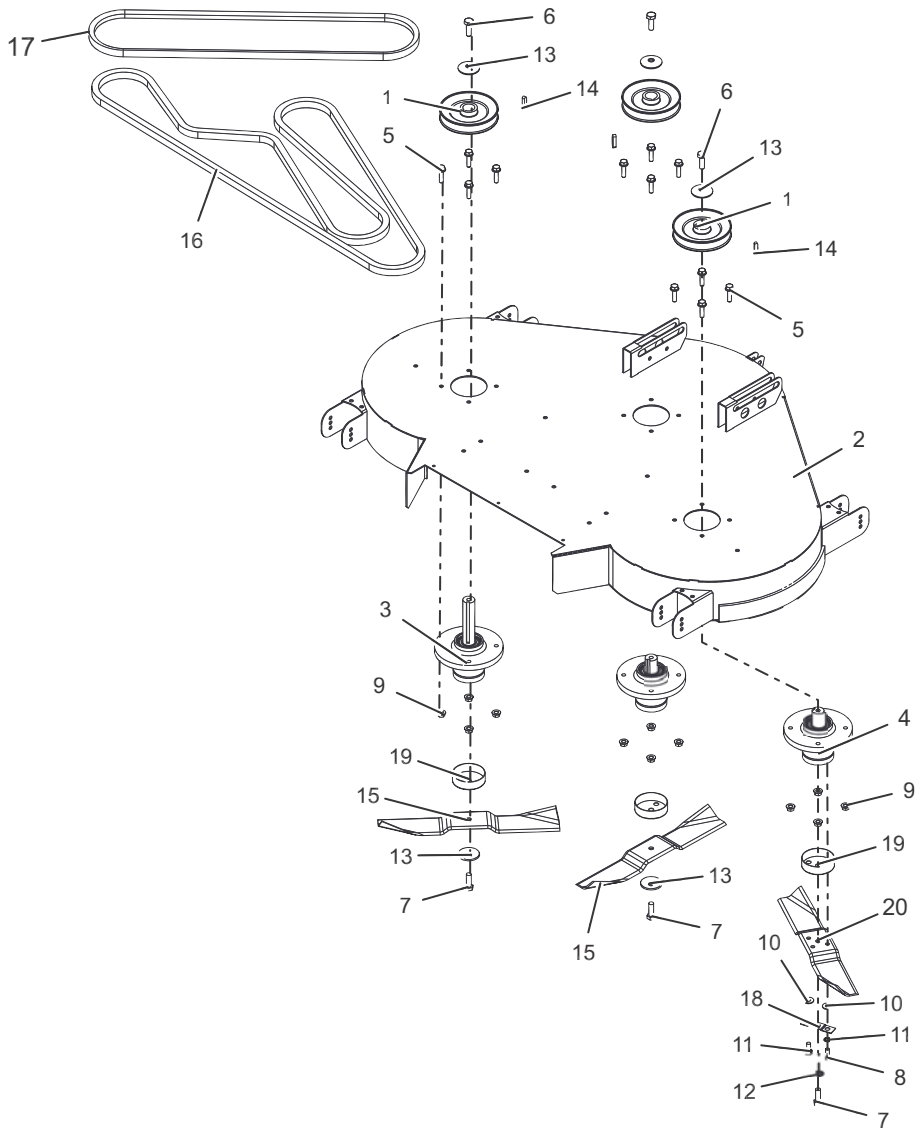

BOM ID	Number	Qty	Description
1	20869502	3	ASM, PULLEY , 5" SPLIT, DECK
2	327401402	1	WLDMT, XRD 42" EXT
3	40503507	1	ASM, DECK BEARING HOUSING - LONG SHAFT
4	40503607	2	ASM, DECK BEARING HOUSING - SHORT SHAFT
5	019483700	12	M8 x 30 Flange Bolt
6	02886000	3	M10 x 30 Hex Screw HT Grade 8.8 Zinc Trivalent Clear
7	028892300	3	M10 x 30 HEX SCREW Hd DIN933 GRADE 10.9
8	028893500	2	M8 x 20 HEX SCREW Hd DIN933 GRADE 10.9
9	049383700	12	NUT, FLANGED M8
10	088003700	2	M8 Washer Form C Steel Zinc Plate
11	088003800	2	WSHR, M8 INTERNALLY SERRATED SHAKEPROOF
12	088004000	1	WASHER M10 SHAKEPROOF
13	08819901	5	WSHR, DOME 1 3/4" x 3/8" x 1/8"
14	09853401	3	KEY, 1/4" X 1/4" X 1 1/4"ANSI STD
15	16869102	2	BLADE, LH 15"
16	22870000	1	V-BELT, AA 120
17	22870100	1	V-BELT, B58
18	27111200	1	TAB, DECK LOCKING
19	30831500	3	CAP, DECK SLINGER
20	16869202	1	BLADE, RH 15"

PULLEYS AND IDLERS

Model 20100050

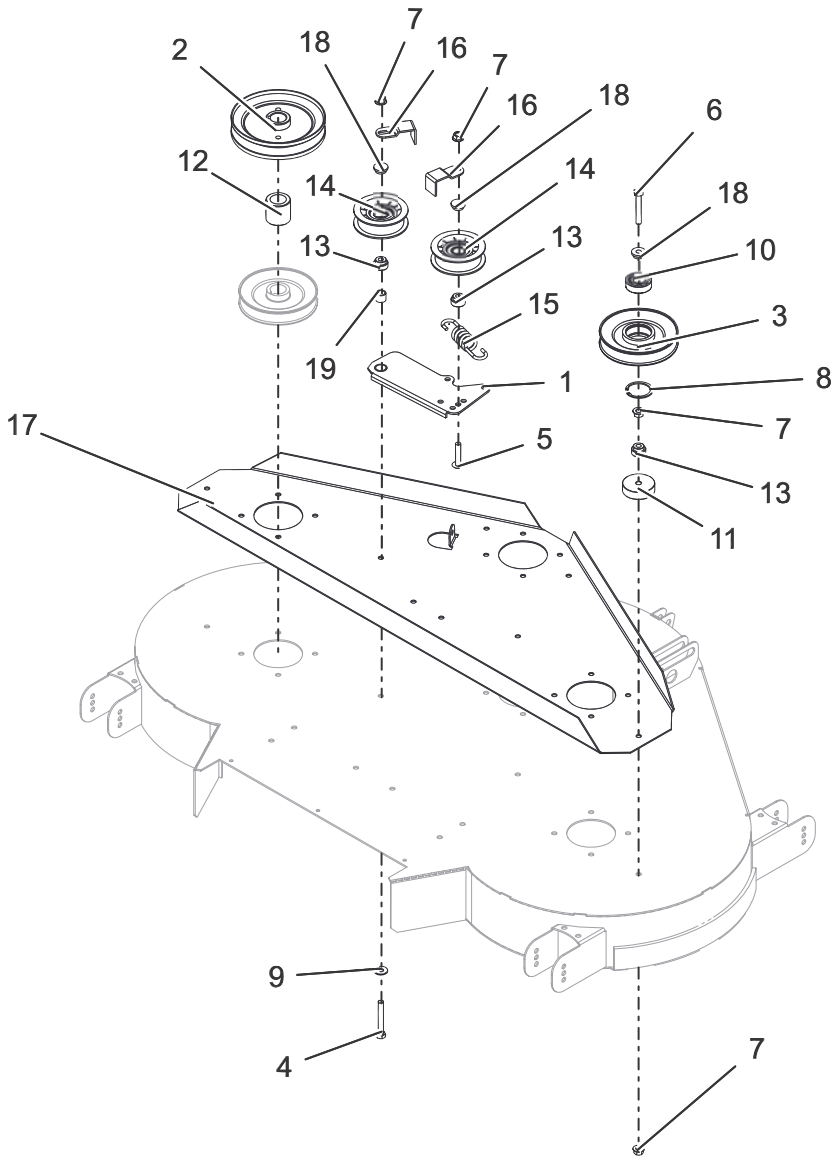

BOM ID	Number	Qty	Description
1	32731000	1	ASM, DECK TENSION PLATE
2	209044300	1	PULLEY, DECK 5 3/4"
3	209044601	1	PULLEY, IDLER 5"
4	018000600	1	M8 x 60 Hex Bolt HT Grade 8.8 Zinc Plate
5	018001700	1	M8 x 40 Zinc Plated Roofing Bolt
6	028662600	1	M8 x 55 Hex Bolt HT Grade 8.8 Zinc Trivalent Clear
7	049383700	4	NUT, FLANGED M8
8	07847600	1	40 mm Circlip
9	088003700	1	M8 Washer Form C Steel Zinc Plate
10	108116001	1	BRG, 6203-2RS ROLLER SHAFT
11	183004200	1	SPCR, IDLER PULLEY
12	183530500	1	DECK, DRIVE PULLEY SPACER
13	18831602	3	IDLER, PULLEY SPACER
14	20811500	2	PULLEY, PLASTIC IDLER
15	25906200	1	Deck Spring
16	301123800	2	BRKT, BELT RETAINING
17	302012501	1	DECK, TOP 42 STIFFENER
18	31351101	3	BOSS, PGC JOCKEY CAP
19	52936700	1	BRG, OILITE BUSH 2

GUARDS

Model 20100050

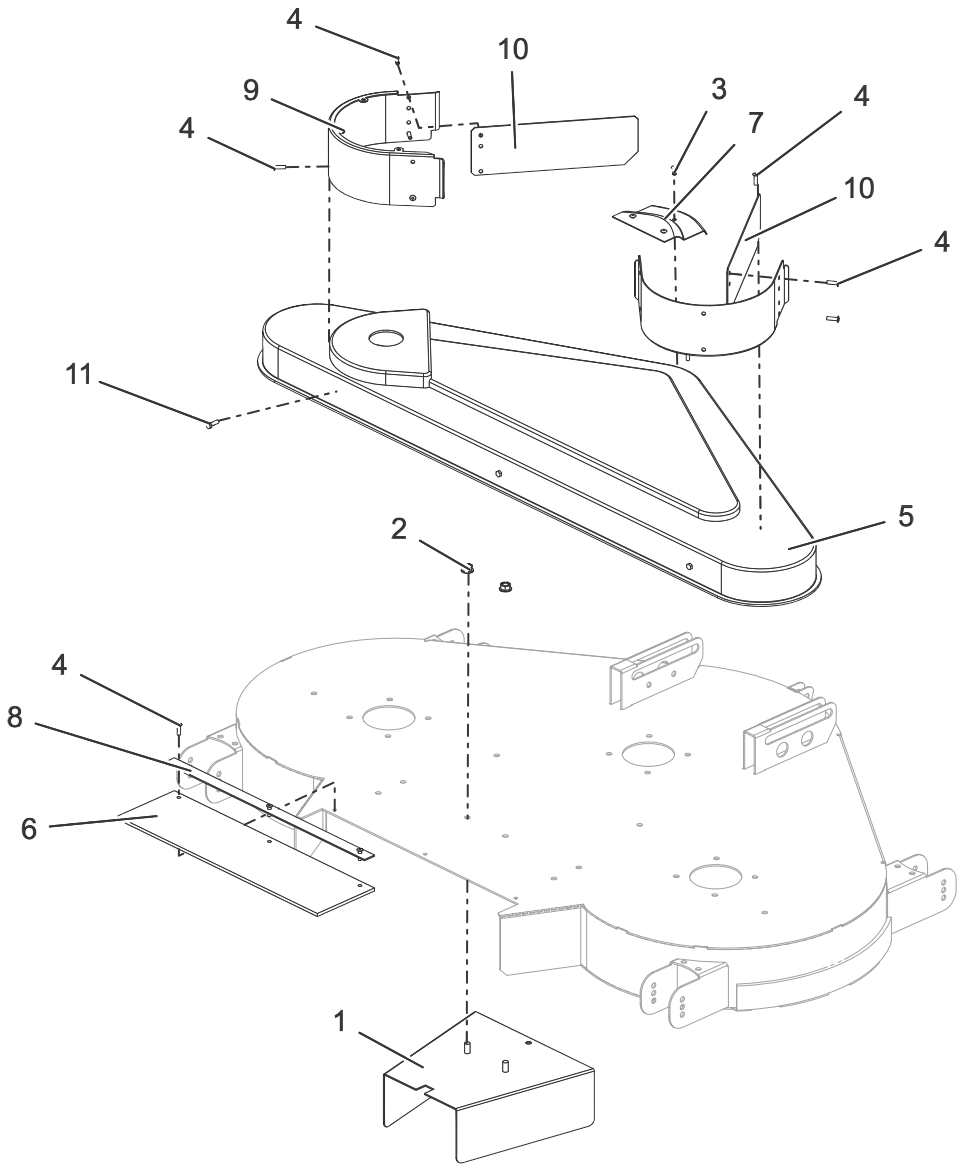

BOM ID	Number	Qty	Description
1	327402000	1	ASM, GUIDE PLATE 42
2	049383700	2	NUT, FLANGED M8
3	12824400	3	RVT, POP 4.8X10mm
4	12860100	12	RIVET 4.8 X 16MM ALLOY POP
5	148002402	1	DECK, 42 IBS Cover
6	14868900	1	FLAP, DECK RUBBER
7	301205000	1	SHIELD, DECK FRONT
8	541113000	1	STRIP, DECK FLAP
9	549007800	2	GUARD, DECK PULLEY
10	549008300	2	PLT, DECK PULLEY GUARD EXTENSION
11	028001500	7	4.8 x 16 Self Drilling Hex Head

ANTI-SCALP WHEELS

Model 20100050

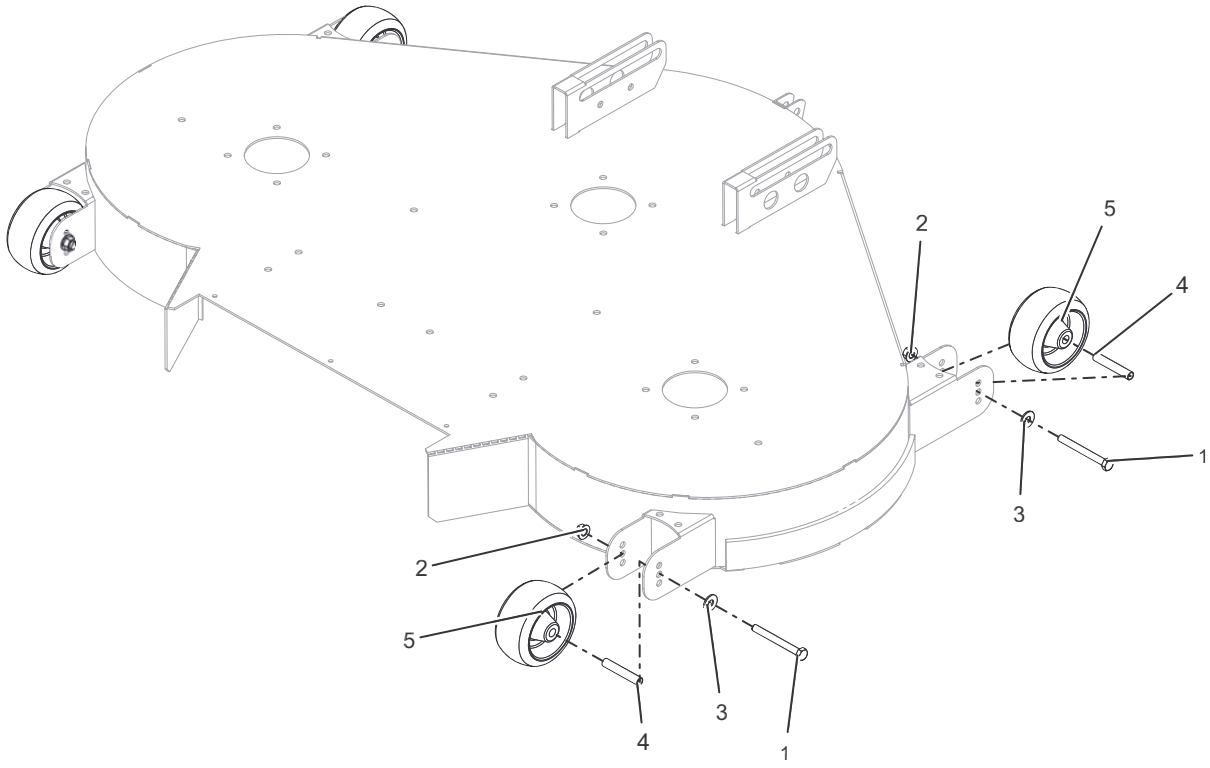

BOM ID	Number	Qty	Description
1	018005600	4	M8 x 75 Hex Bolt HT Grade 8.8 Zinc Trivalent Clear
2	049383700	4	NUT, FLANGED M8
3	088003700	4	M8 Washer Form C Steel Zinc Plate
4	179550400	4	DECK, Anti Scalp Wheel Hub 10 x 57 mm
5	7320	4	DECK, WHEEL SMALL

Ariens Company Limited
Countax House, Haseley Trading Estate,
Great Haseley, Oxford, OX44 7PF

Telephone: +44 (0) 1844 278800

An Ariens Company Brand