COUNTAX®

A20/50 TRACTOR SERVICE DRAWINGS & PARTS LIST

OCTOBER 2004

A20/50 TRACTOR PARTS LIST INDEX

1. FRONT AXLE ASSEMBLY

2A. TWIN EXHAUST(B&S ENGINE) ASSEMBLY

2B. TWIN EXHAUST(HONDA ENGINE) ASSEMBLY

3. TWIN CYLINDER ENGINE(B&S) ASSEMBLY

4A. MK-1 BONNET ASSEMBLY

4B. MK-2 BONNET & TWIN CYLINDER HONDA ENGINE ASSY

5. CONSOL ASSEMBLY

6. SEAT & REAR BODY ASSEMBLY

7. FRONT ACTUATOR & DECK CRADLE ASSEMBLIES

8. P.T.O. TRANSMISSION ASSEMBLY

8A. P.T.O. TRANSMISSION ASSEMBLY - HAND CLUTCH / BRAKE CONTROL

9. HAND CLUTCH/BRAKE CONTROL TUFF TORQ HYDROSTATIC ASSEMBLY

9A. HAND CLUTCH/BRAKE CONTROL TUFF TORQ HYDROSTATIC ASSEMBLY- from Serial No: 00126...

10A. ELECTRICAL PARTS (Pre Operators Management System)

10B. ELECTRICAL PARTS (HE Operators Management System)

11. REAR DISCHARGE DECK

12. MULCHER DECK

13. RUNNING BOARD & REAR BODY ASSEMBLY - HAND CLUTCH / BRAKE CONTROL from Serial No: 00216...

13B. A20/50H RUNNING BOARD & REAR BODY - HAND CLUTCH / BRAKE CONTROL

14. POWERED GRASS COLLECTOR

15. POWERED GRASS COLLECTOR NET

16. TRACTOR DECALS

ACCESSORIES: 42" HIGH GRASS MULCHER

A 20/50 FRONT AXLE ASSEMBLY

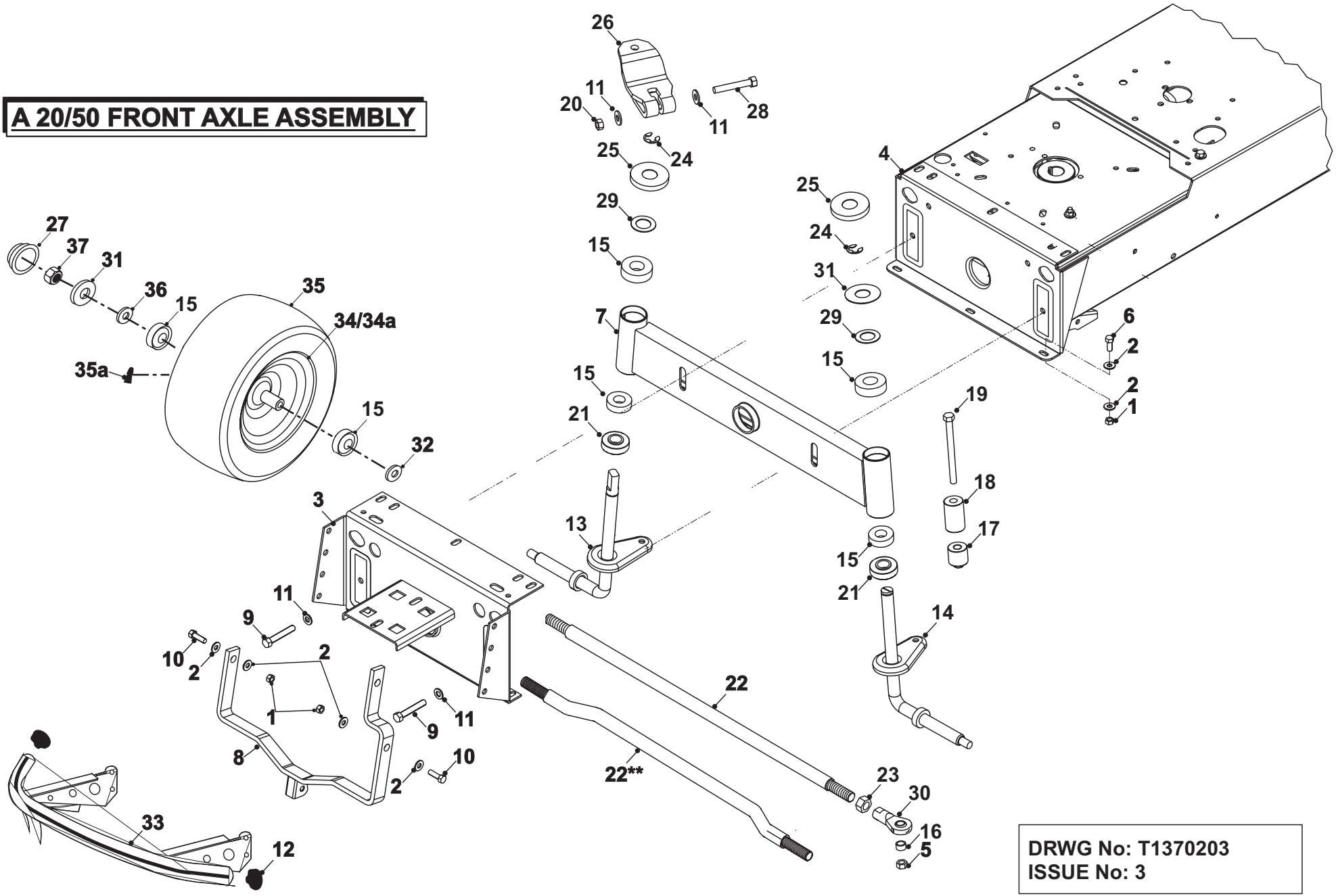

DRWG No: T1370203
ISSUE No: 3

SECTION 1.

A20/50 TRACTOR
FRONT AXLE ASSEMBLY PARTS LIST

	PART DESCRIPTION	PART NUMBER
1	M8 Nyloc Nut	04850600
2	M8 Washer	08819501
3	Chassis Front	27115500
4	Chassis	327006300
5	M12 Nyloc Nut	049381100
6	Bolt M8 x 20mm	02825900
7	Axle Beam C-Series & A20/50	327014700
8	20/50 – C Series Deck Tension Cradle	327009800
9	M10 x 60mm Coach Bolt Zinc / Clear	018005000
10	Bolt M8 x 25mm Roofing Bolt	01902300
11	Washer 10.8id x 20.7od x 2mm Thk	088002400
12	Stainless Steel Bullbar Plastic End Cap	148014400
13	R.H. Stub Axle 20/50 2002 Model	327178200
14	L.H. Stub Axle Welded 2002 Version	327178300
15	Front Wheel Bearing	10802200
16	20/50 Steering Link Rod Spacer	183012800
17	20/50 Steering Link Rod Spacer	183012700
18	20/50 Steering Link Support Spacer	183012600
19	Bolt M12 x 120mm	018002200
20	M8 Nyloc Nut	04850600
21	Stub Axle Spacer	183006200
22 22**	20/50 Track Rod Shaped Track Rod For 2050 Problem Tractors	183012900 183018200
23	Nut M12	049381200
24	19mm Circlip External cia1400/19	07921200
25	Slinger	32121800
26	20/50 Steering Arm 2002 Model	327177000
27	Hub Cap (Moulded)	14811800
28	Bolt M8 x 50mm	018001800
29	Washer 32mm x 19.5mm	30127900
30	M12 Rod End Joint 20/50	10872800
31	Hub Cap Washer Front Wheel	30128100
32	Washer 3/4" T3 ZP	08822900
33	Stainless Steel A/C Bullbar	327028000
34	20/50 Complete Front Wheel	198001400
34a	Wheel Rim – Supplied Through Sales Dept	198001900
35	20/50 Front Tyre	198000600
35a	Wheel Valve	14889200
36	Washer M12 x 24x 1.6	088003600
37	M12 Nyloc Nut	049381100

A20/50 TWIN EXHAUST ASSEMBLY
BRIGGS & STRATTON ENGINE

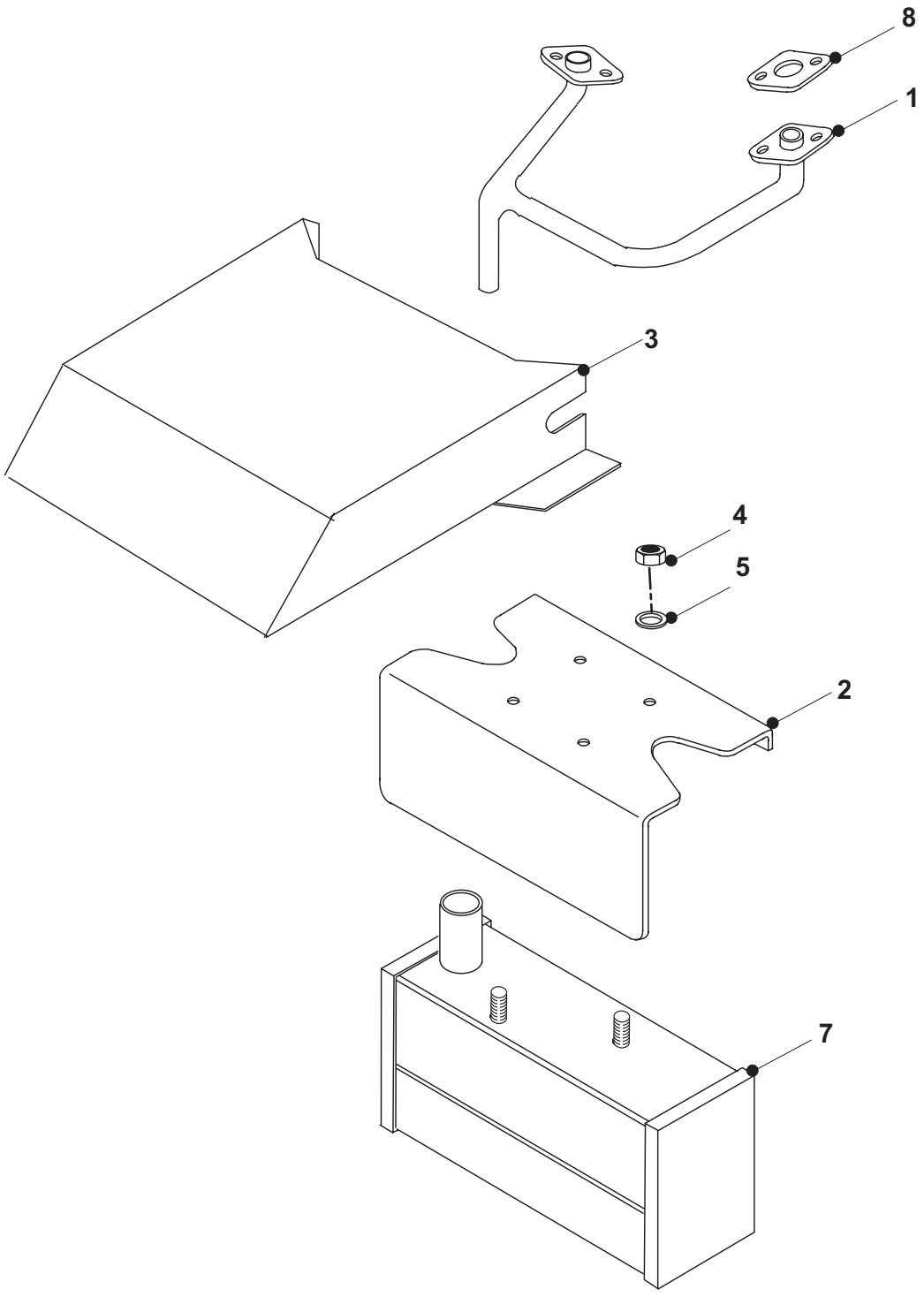

DRWG No : T130A0101
ISSUE No : 1

SECTION 2A.

A20/50 TRACTOR
EXHAUST ASSEMBLY
BRIGGS & STRATTON
PARTS LIST

	PART DESCRIPTION	PART NUMBER
1	Twin Exhaust – C Series / 2050 B & S	327172300
2	Exhaust Cover Galvanised	30122950
3	Exhaust Heat Shield C600/800	52100000
4	Full Nut Heax M8 Z/P	04822300
5	Washer M8	08815901
6	Exhaust Paste (not illustrated)	52923800
7	Tractor Exhaust Box	327007301
8	Exhaust Gaskets	(Supplied By Briggs & Stratton)

A20/50H TWIN EXHAUST ASSEMBLY
HONDA GXV620 ENGINE

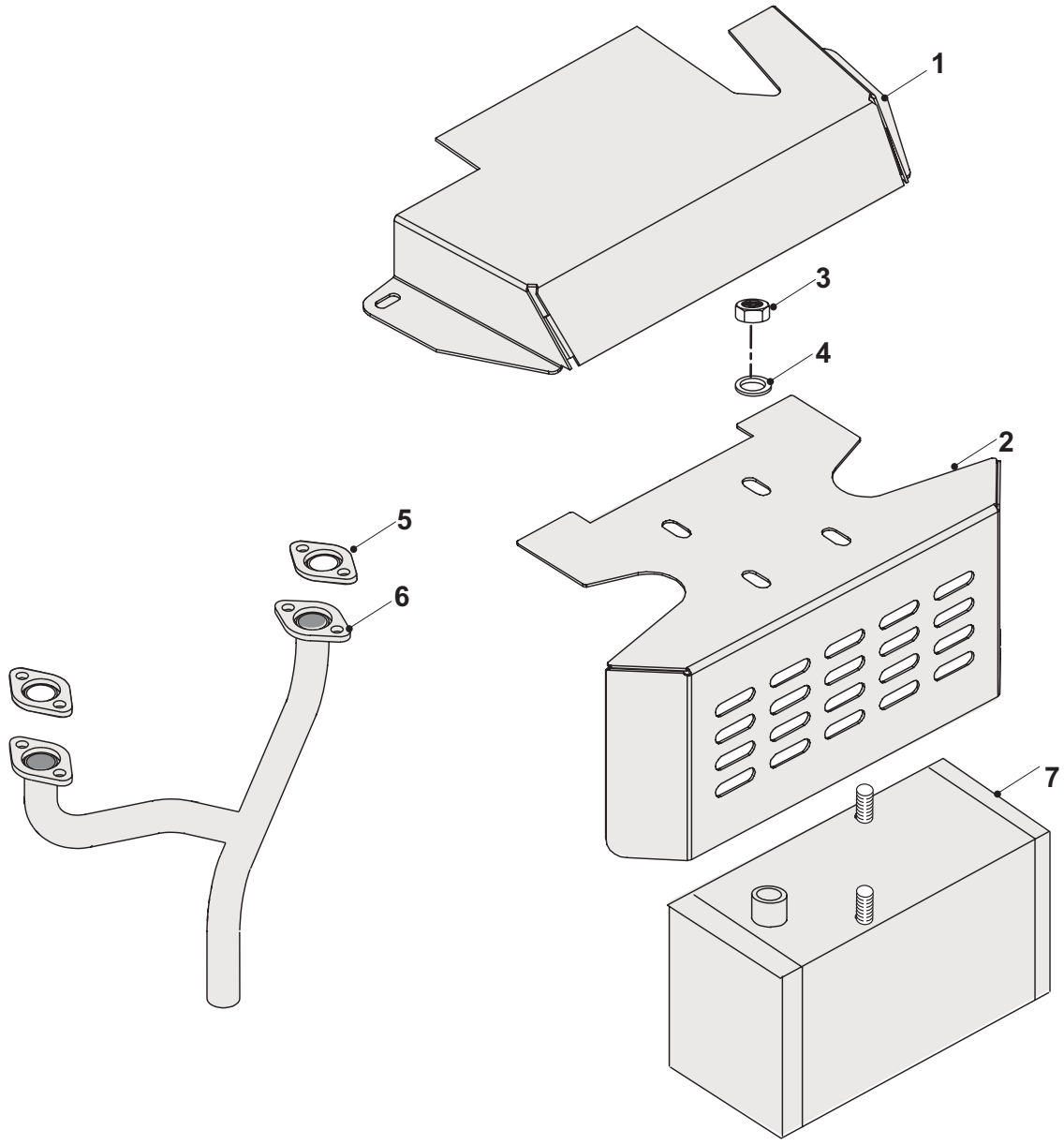

DRWG No : T130B0101
ISSUE No : 1

SECTION 2B.

A20/50H TRACTOR
EXHAUST ASSEMBLY
HONDA GXV620 ENGINE
PARTS LIST

	PART DESCRIPTION	PART NUMBER
1	Zintec Heat Shield 18/20HP GXV620	301138000
2	Exhaust Box Cover	30122900
3	Full Nut Heax M8 Z/P	04822300
4	M8 Washer	08819501
5	Exhaust Gasket	Supplied by Honda
6	2002 Honda 18/20HP Exhaust Pipe	327026400
7	Tractor Exhaust Box Honda 2003	327007301
8	Exhaust Paste (not illustrated)	52923800

A20/50 TWIN CYLINDER
BRIGGS & STRATTON ENGINE ASSY

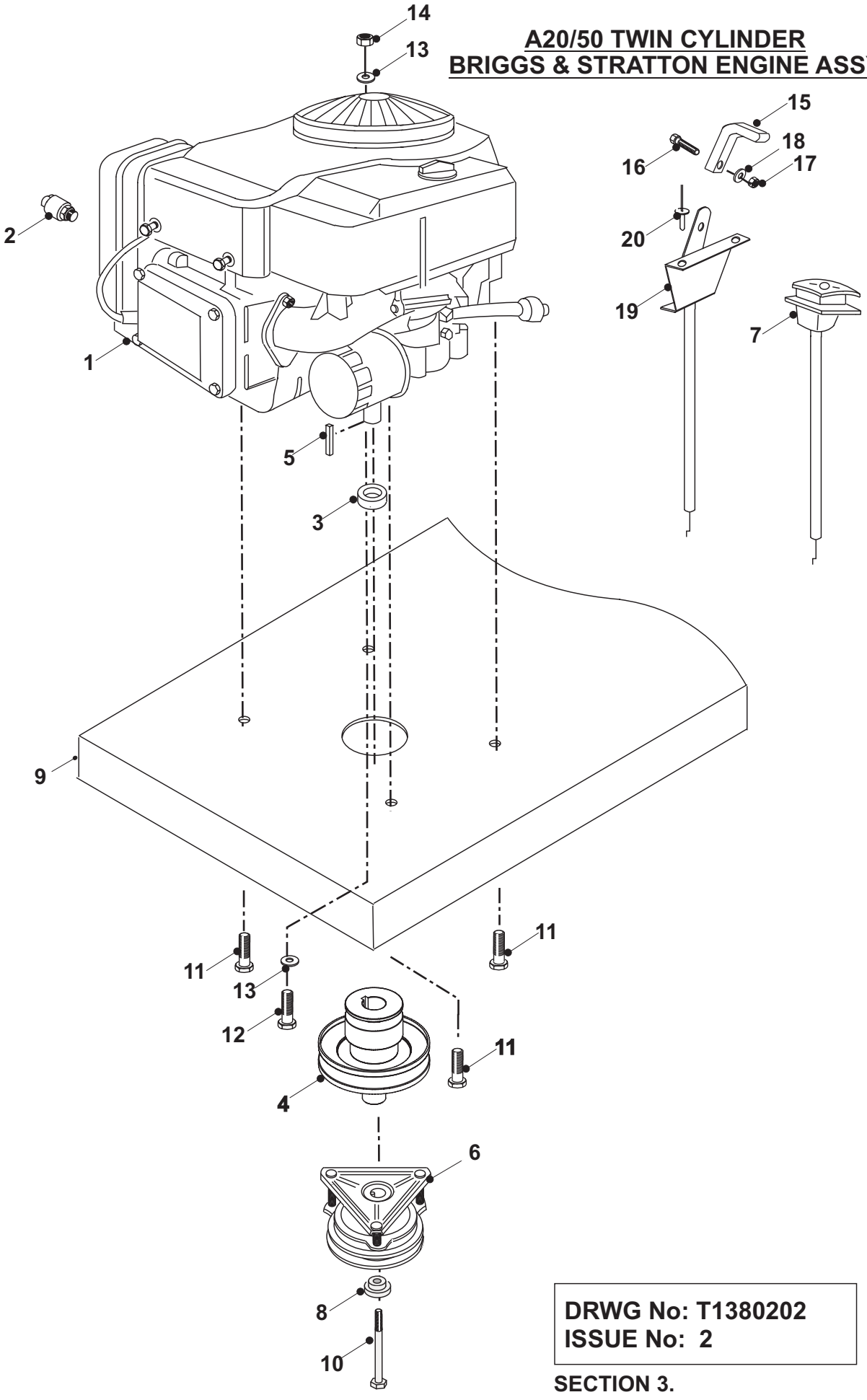

DRWG No: T1380202
ISSUE No: 2

SECTION 3.

A20/50 TRACTOR
ENGINE ANCILLARY PARTS LIST

	PART DESCRIPTION	PART NUMBER
1	Engine - Not Available From Countax	N/A
2	Oil Drainage Valve	52851200
3	Engine Pulley Spacer	31854000
4	Tractor 20-50 Engine Pulley	327006500
5	Engine Key	09853400
6	Electric Clutch 20/50	44815200
7	Choke Cable	RCL29005800
8	2050 Engine Pulley Cap	183016800
9	Chassis	327006300
10	Bolt 7/16” UNF x 6”	01853300
11	3/8” UNC x 1.1/4” Bolt BZP	01848700
12	M8 x 40mm Bright Zinc Plate Bolt	018003200
13	M8 Washer	08819501
14	M8 Nyloc Nut	04850600
15	Control Knob (Throttle Cable)	14810400
16	M4 x 10 Posi S/s Z/P	02847800
17	M4 Nyloc T	04826400
18	M4 Form A Washer BZP	08826200
19	Twin Throttle Control (14,16,18 & 20HP Engines)	528004900
20	Pop Rivet 3.2mm x 9mm 1041-3209	12863100

A20/50 MK-1
BONNET ASSEMBLY

UPTO AUGUST 2002

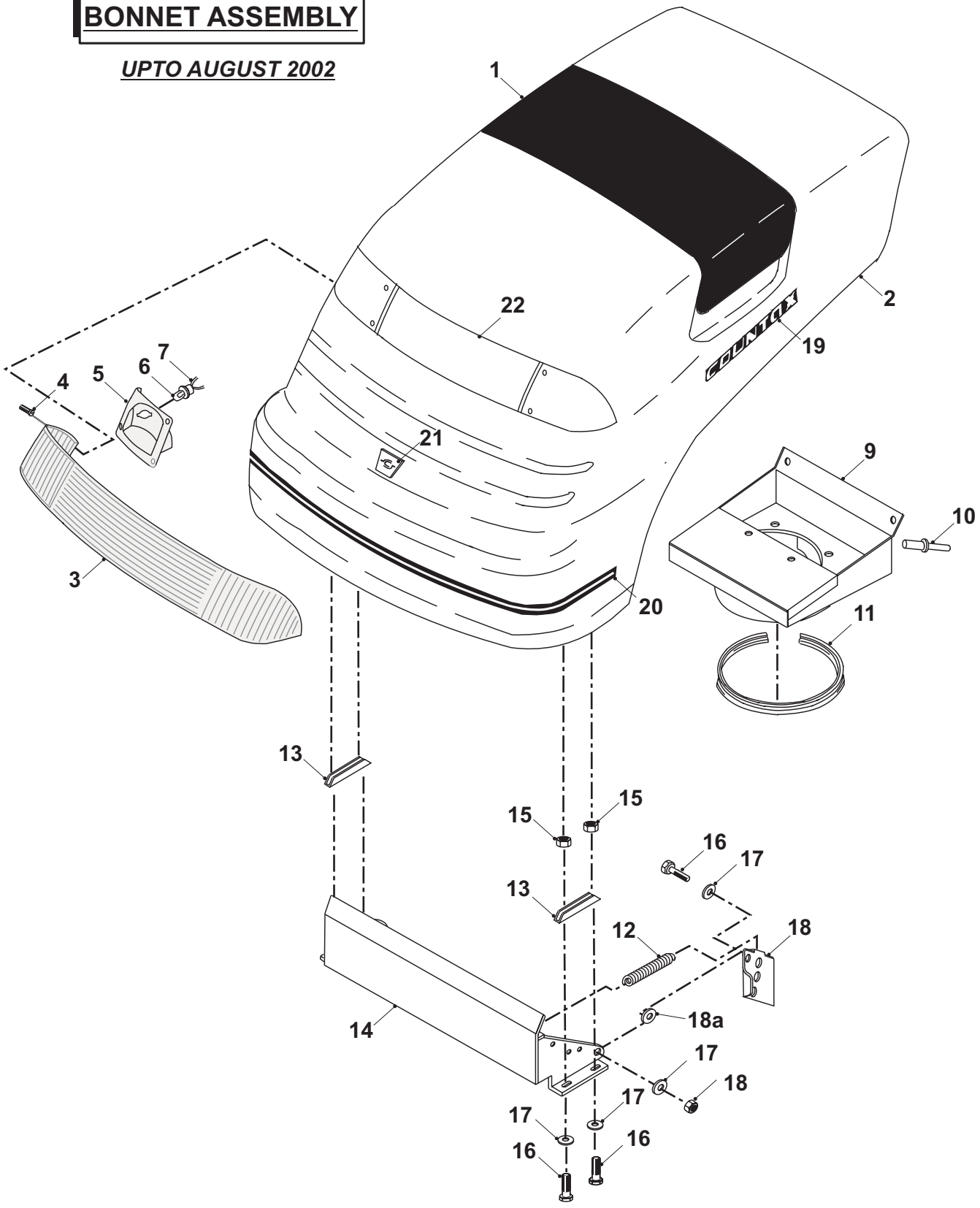

DRWG No: T1299901
ISSUE No: 1

SECTION 4A.

A20/50 MK-1 TRACTOR
(UPTO AUGUST 2002)
BONNET ASSEMBLY PARTS LIST

	PART DESCRIPTION	PART NUMBER
1	Bonnet Cowel 95/96	14929100
2	Bonnet 20/50	148003800
	Complete Bonnet A20/50 Bonnet	405004900
3	Headlamp Lens 96 C.Series	14932800
4	6 x 8mm Pozi S/S S/Tap	02913100
5	Headlamp Reflector (R/H)	14932700
	Headlamp Reflector (L/H)	14932600
6	12 Volt Pole Bulb	44816200
7	Bulb Holder	44816100
8	Light Loom 3894 (not Illustrated)	44813900
9	20/50 Bonnet Cowl	327013400
10	Rivet 4.8mm x 16mm Alloy Pop 1031-4816	12860100
11	Bonnet Rubber Trim	14896100
12	Spring	25805200
13	Bonnet Hinge Plate	27116500
14	Bonnet Hinge	32730100
15	M8 Nyloc Nut	04920100
16	Screw 8mm x 25mm	02819600
17	M8 Washer	08819501
18	Bonnet Hinge Stop (LH)	27103300
	Bonnet Hinge Stop (RH)	27113600
18a	Bonnet Pivot Boss	31306100
19	Pegged Badge Countax (Countax Yellow)	35932500
20	Bumper Strip Decal	35931100
21	Decal C.Series Badge	35929300
22	Decal – Headlamp Strip	35931200
23	Decal A20/50 Drive Belt (not illustrated – Decal location under bonnet)	358009801

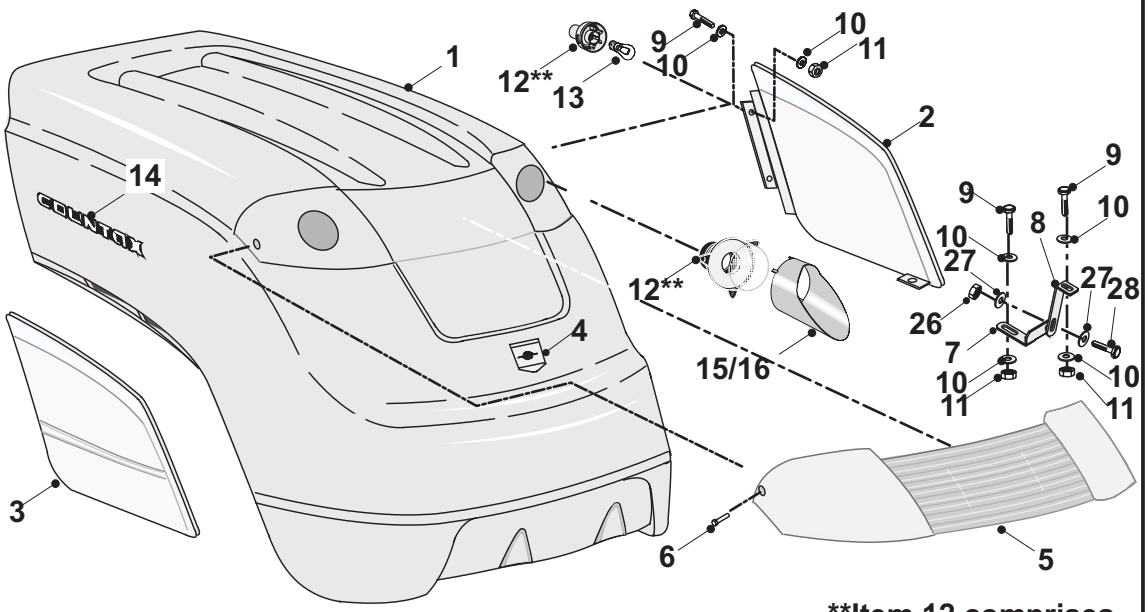

**Item 12 comprises of Bulb Holder & Headlight Unit

A20/50 TWIN CYLINDER HONDA GXV 620 & BONNET ASSEMBLY

FROM SEPTEMBER 2002

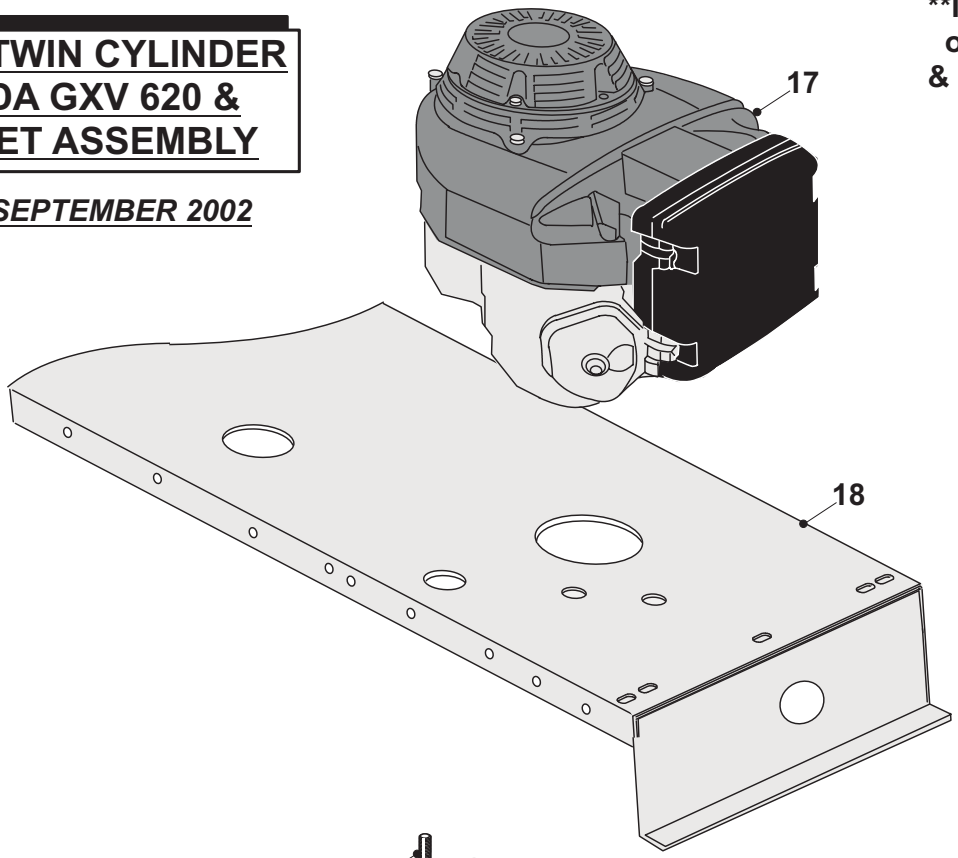

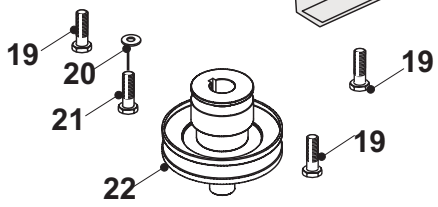

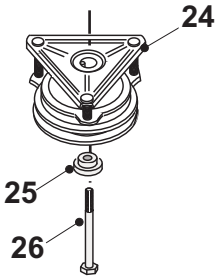

DRWG No: T2170301
ISSUE No: 1

SECTION 4B.

A20/50 MK-2 (FROM SEPTEMBER 2002)
BONNET & TWIN CYLINDER HONDA GXV 620 ENGINE ASSY
PARTS LIST

	PART DESCRIPTION	PART NUMBER
1	Bonnet A2050 MK2 2003	405008100
2	Side Panel L/H C-Series 2002	148014100
3	Side Panel R/H C-Series 2002	148014200
4	Decal `C' Series Badge	35929300
5	C-Series Bonnet Lens 2002	148013400
6	M4 x 16mm Socket Head Countersunk Screw S/C	018005100
7	Common Front Side Fixing Bracket LH Common Front Side Fixing Bracket RH	301137200 301137300
8	C-Series Front Side Fixing Bracket LH C-Series Front Side Fixing Bracket RH	301137600 301137700
9	M6 x 20mm Lng Sckt Hd Cap Screw S/C	028000200
10	Washer 9/16"	08827800
11	Nut M6 Nyloc	04920500
12	Light – C Series LH 2002 2BA 008 221-007	448008400
13	Bulb C Series 2002 PY21W	448008500
14	Pegged Badge `Countax'	35932500
15	C Series LH Light Can 2002	148013500
16	C Series RH Light Can 2002	148013600
17	Honda Engine GVX 620 (18 & 20HP)	Not Available From Countax
18	20/50 Chassis	327006300
19	Hx Hd Bolt Zinc Plt & Clear Passivated	018005700
20	M8 Washer	08819501
21	M8 x 40mm Bright Zinc Plate Bolt	018003200
22	Tractor 20/50 Engine Pulley	327006500
23	Bolt 7/16" UNF x 6"	01853300
24	Electric Clutch 20/50	44815200
25	20/50 Engine Pulley Cap	183016800
26	M8 Nyloc Nut	04850600
27	M8 Washer	08819501
28	Bolt M8	01852000

A20/50 CONSOL ASSEMBLY

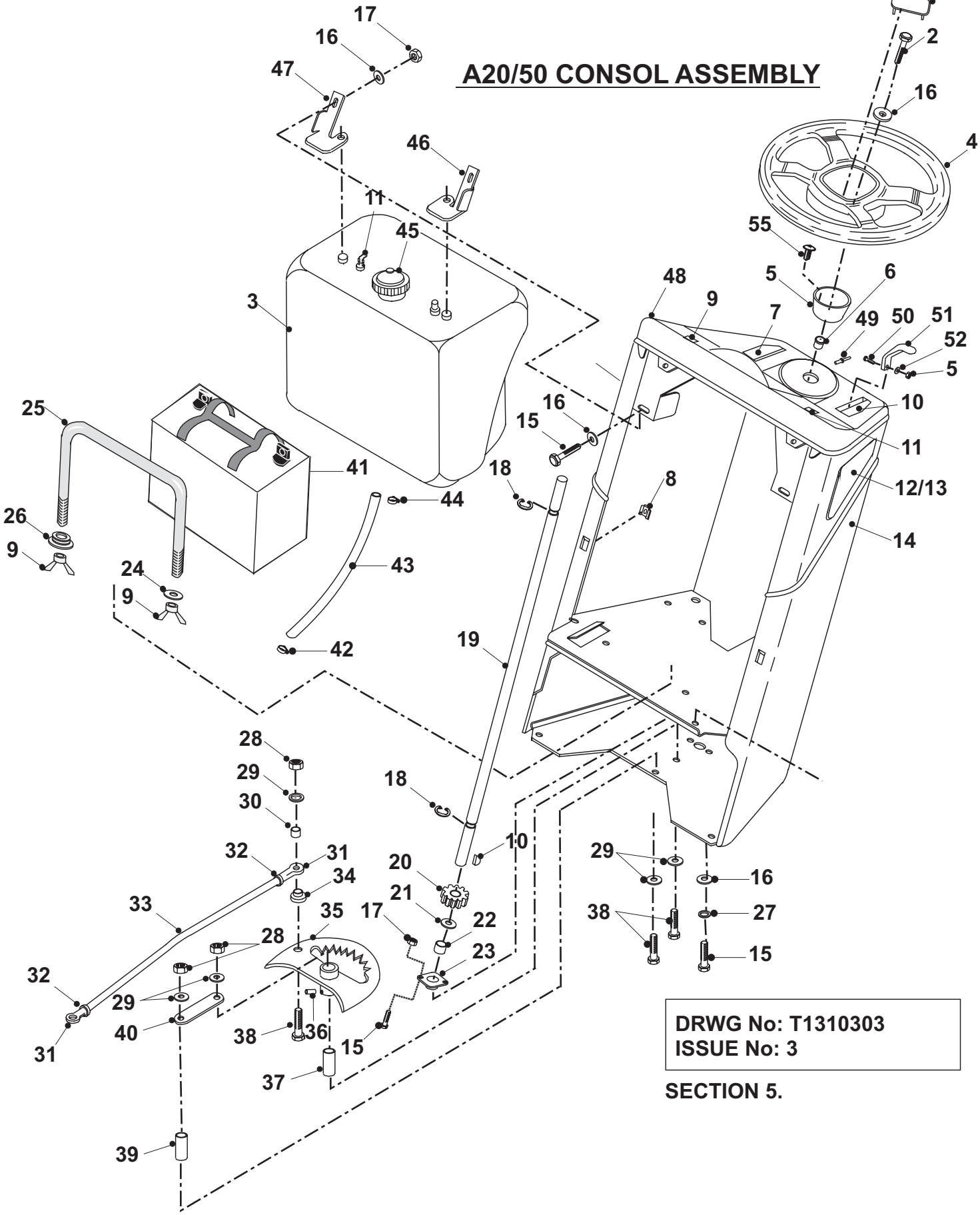

SECTION 5.

A20/50 TRACTOR
CONSOL ASSEMBLY PARTS LIST

	PART DESCRIPTION	PART NUMBER
1	C-Series Steering Wheel Cap	14938700
2	Screw M8 x 25mm	01916900
3	Fuel Tank with hole for gauge 03	148015400
4	Steering Wheel '96	14928200
5	M4 Nyloc T	04826400
6	Column Upper Bush	14801800
7	6 x 8 Pozi S/S S/Tap	02913100
8	M6 x 3mm Captive Nut	049381900
9	Wing Nut ¼" Bsw	04822600
10	Key	09823900
11	Fuel Level Sender (Gentech)	448010600
12	Rubber Knee Pad R/H	14859200
13	Rubber Knee Pad L/H	14859300
14	2002 Consol ` A' Tractor	327028400
15	Bolt M8 x 20mm	02825900
16	M8 Washer	08819501
17	M8 Nyloc Nut	04920100
18	Circlip 5/8"	07823800
19	Steering Column	31328400
20	Steering Gear 20/50	213112100
21	Washer 5/8" T3 LP	08822700
22	Steering Rod Spacer	18401500
23	Column Lower Bearing	10801700
24	Washer 9/16"	08827800
25	Battery Clamp	313008500
26	Bonnet Pivot Boss	31306100
27	M8 Star Washer	088000800
28	Nyloc Nut M12 `T' Fine	04836100
29	M12 Washer	088001200
30	Spacer 7mm x 3/8" i.d.	31302900
31	M12 Rod Joint 20/50	108728000
32	Nut M12	049381200
33	20/50 Steering Rod	313007400
34	Rose Joint Shoulder Boss (Short)	31339600
35	A2050 19 tooth Steering Quadrant Special	301134100
36	Grease Nipple	11808600
37	Steering Rack Pivot	31337400

A20/50 TRACTOR
CONSOL ASSEMBLY PARTS LIST

	PART DESCRIPTION	PART NUMBER
38	M12 x 60mm Bolt	019478800
39	Steering Support Boss	31337500
40	Steering Link Plate	27102400
41	Battery Dry Charged	458141300
42	Hose Clip (Spring Type)	11867100
43	Fuel Feed Pipe	14803200
44	Jubilee Clip (Fuel Tank Hose)	11856900
45	Fuel Tank Cap	52803100
46	F/Tank Bracket L/H	27115800
47	Fuel Tank Bracket R/H	27115900
48	Consol Top 2002	148012801
49	Consol Top Insert Upper Left (Not Illustrated) Consol Top Insert Upper Right (Not Illustrated) Consol Top Insert Lower Left (Not Illustrated) Consol Top Insert Lower Right (Not Illustrated)	148012900 148013000 148013100 148013200
50	M4 x 12 Pozi Pan S/S zinc plated	02826300
51	Control Knob (Throttle Cable)	14810400
52	M4 Form A Washer BZP	08826200

A20/50 SEAT & REAR BODY ASSEMBLY

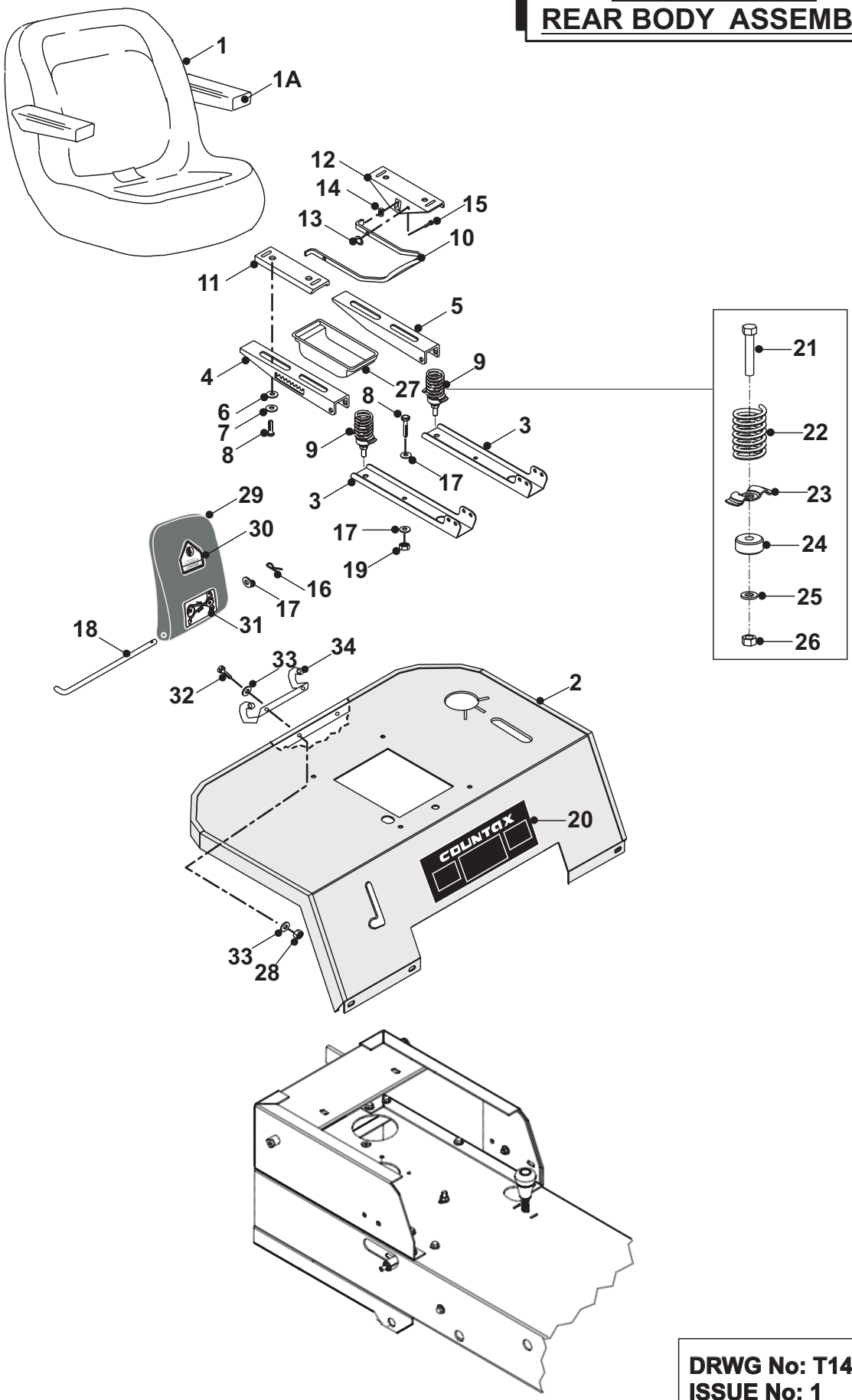

DRWG No: T1409901
ISSUE No: 1

SECTION 6.

A20/50 SEAT & REAR BODY ASSEMBLY
PARTS LIST

	PART DESCRIPTION	PART NUMBER
1	A20/50 Seat	148002000
1a	20/50 Seat Arm Rest Kit	148002101
2	20/50 Rear Body Panel	327010200
3	Seat Attachment Channel	27115400
4	Adjustable Seat Channel R/H	30117700
5	Adjustable Seat Channel L/H	30117800
6	PGC Bag Washer	08104400
7	M8 Star Washer	088000800
8	Bolt M8 x 20mm	02825900
9	Seat Spring Kit	405003200
10	Seat Handle	30203100
11	Seat Plate Adjuster R/H	30117900
12	Seat Plate Adjuster L/H	30118000
13	Starlock Washer	08868700
14	Spring	25831100
15	Rivet ¼" x ½"	012885800
16	2mm R Clip	06849100
17	M8 Washer	08819501
18	Seat Pivot Rod	31301800
19	M8 Nyloc Nut	04850600
20	Instructions Decal 2003	358027200
21	Bolt M8 x 40mm Allen Head	01918500
22	Seat Spring (Adjustable Seat)	25845600
23	Spring Retaining Washer (Seat)	27835400
24	Spacer (HE, C-Series Seat Spring)	31330800
25	Washer 10.8id x 20.7od x 2mm Thk	088002400
26	M10 Nyloc Nut	04886100
27	Tool Tray	148003700
28	M5 Nyloc Nut	04885900
29	PTO Flap Shell Tractor Manual (Plastic)	149496400
30	PTO Danger Decal	35809500
31	Sweeper Belt Decal (Symbols Only)	35809400
32	Screw M5 x 16mm	028003500
33	M5 Washer	088002800
34	PTO Flap Hinge	302005200

A20/50 FRONT ACTUATOR & DECK CRADLE ASSEMBLIES

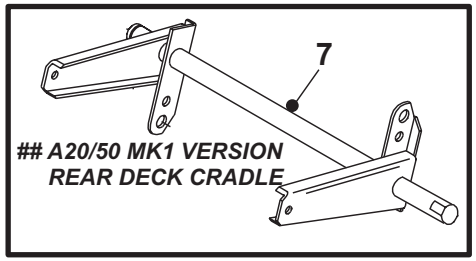

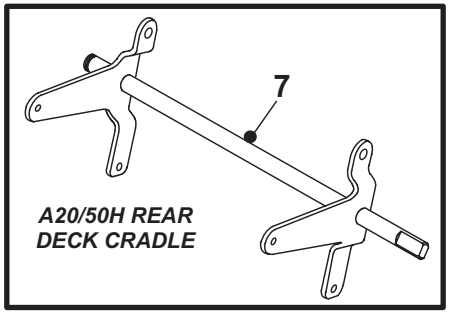

FRONT ACTUATOR / POTENTIOMETER & LOOM ASSEMBLY - A20/50 MK1 MODEL

SEE SECTION 13A FOR CURRENT ASSEMBLY. POTENTIOMETER NOW INCORPERATED IN FRONT ACTUATOR

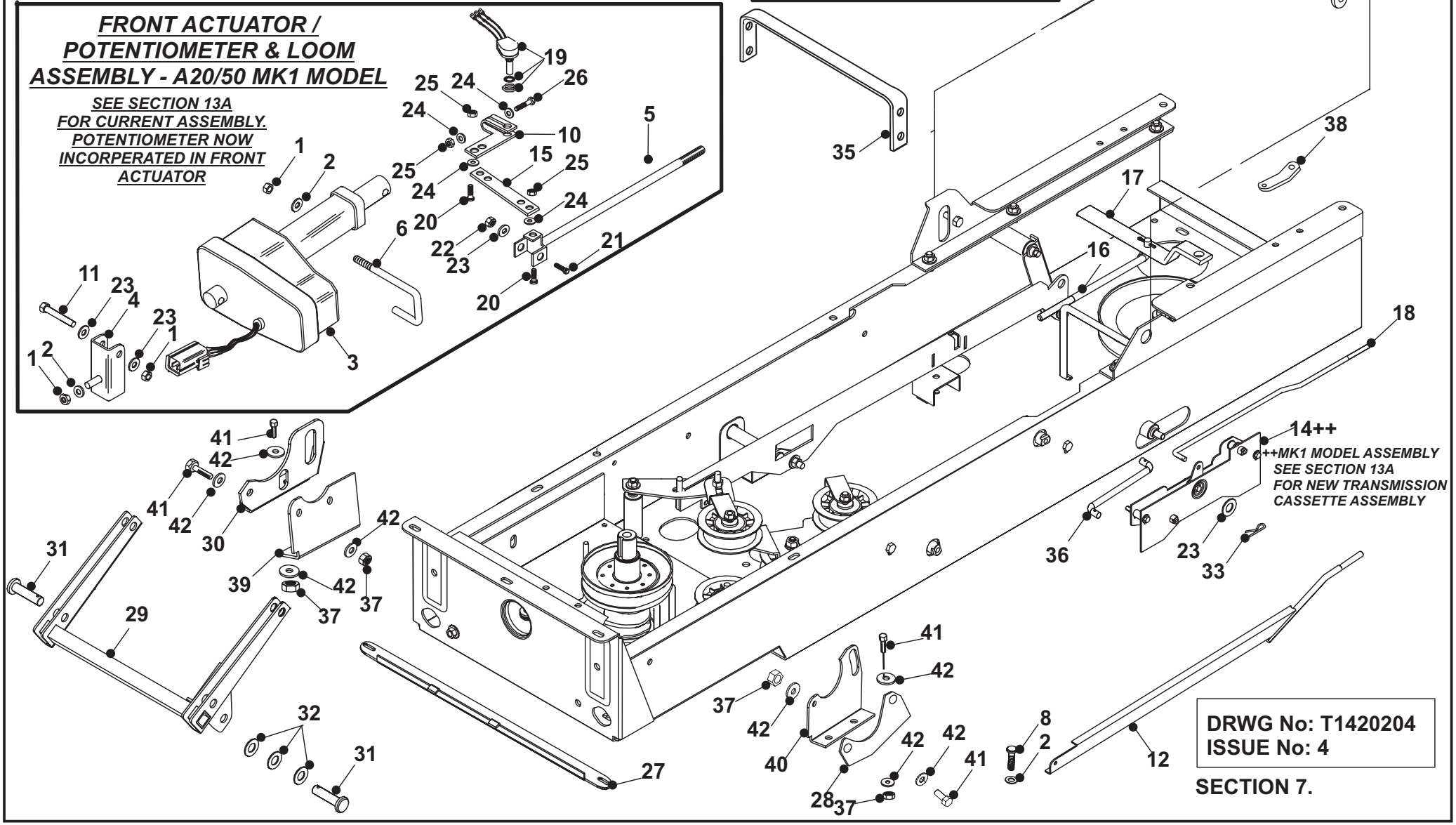

DRWG No: T1420204
ISSUE No: 4

SECTION 7.

A20/50 FRONT ACTUATOR ASSEMBLY
PARTS LIST

	PART DESCRIPTION	PART NUMBER
1	M8 Nyloc Nut	04850600
2	Washer 10.8id x 20.7od x 2mm Thk	088002400
3	Deck Actuator	448002800
4	Deck Lift Actuator Mounting Bracket	327008300
5	A20/50 Deck Lift Con Rod	327007801
6	20/50 Front Actuator Clamp	313004900
7	A,D & K Deck Lift Cradle 02 (old) A,D & K Rear Deck Hanging Bracket (new) V/A Manual Rear Deck Hanging Bracket	327015301 328954300 328954200
8	Bolt M8 x 20mm	02825900
9	Rear Deck Level Cam	30117601
10	98 HE Potentiometer Bracket	301040600
11	M10 x 50 Hex Head Bolt	018002300
12	20/50 Deck Level Bar	327007900
13	2002 Tractor Deck Level Trunnion MK1	189497500
14	20/50 Transmission Cassette	405002300
15	98 HE Deck Lift Con Rod Adjust Plate	301040700
16	20/50 Brake Rod	313004700
17	20/50 Transaxle Brake Extension	302005300
18	20/50 Forward / Reverse Rod	313004800
19	Potentiometer	44908000
20	Set Screw M5 x 12mm	01942500
21	Bolt M10 x 50 Hex Head Bolt	018002300
22	M10 Nyloc Nut	04886100
23	Washer 10.8id x 20.7od x 2mm Thk	088002400
24	Washer M5	08911500
25	M5 Nyloc Nut	04885900
26	Bolt M5 x 20mm (Vac)	018000100
27	20/50 Clutch Bar	302005100
28	Tractor Deck Adjustment Bracket .New Part no: 30128400	301040000
29	Deck Carrying (Front)	327006800
30	20/50 Deck Lever Bracket	301040000
31	Deck Lift Pin	31339400
32	M12 Washer	088001200
33	2mm R Clip	06849100

A20/50 FRONT ACTUATOR ASSEMBLY
PARTS LIST

	PART DESCRIPTION	PART NUMBER
35	Deck Lift Cradle C-Series & 20/50	29200700
36	A2050 Forward & Reverse Cassette Rod	327175600
37	M8 Nyloc Nut	04850600
38	Deck Lift Spring Anchor – 06/03/02	307183500
39	2050 Left Hand Front Deck Level Bracket	301053900
40	2050 Right Hand Front Deck Level Bracket	301054000
41	Bolt M8 x 20mm	02825900
42	M8 Washer	08819501

A20/50 P.T.O TRANSMISSION ASSEMBLY

MK1 UPTO SERIAL NO: 00125

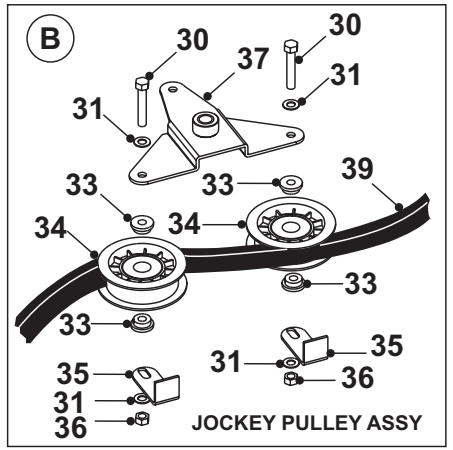

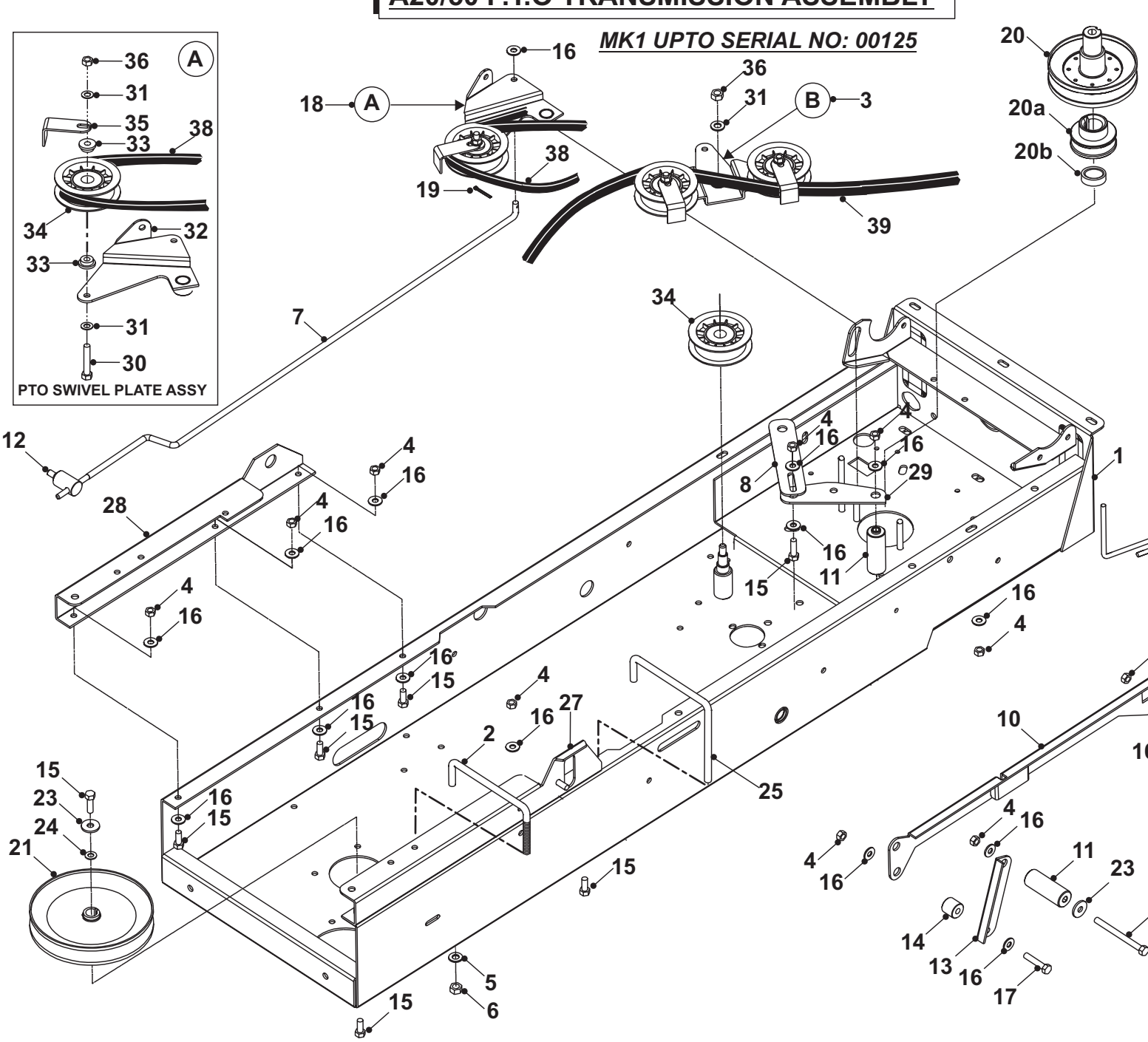

DRWG No: T1419901
ISSUE No: 1

SECTION 8.

A20/50 TRACTOR
HAND CLUTCH / BRAKE CONTROL MODEL
P.T.O. & TRANSMISSION DRIVE ASSEMBLY
From Serial No: 00126…….
PARTS LIST

	PART DESCRIPTION	PART NUMBER
1	20/50 Chassis	327006301
2	TX PTO Jockey Pulley Plastic (Capitol)	20811500
3	20/50 Jockey Pulley Plate Assy	321122700
4	M8 Nyloc Nut	04850600
5	Washer 10.8ID x 20.7OD x 2Thk	088002400
6	M10 Nyloc Nut	04886100
7	20/50 PTO Engage Rod 2003	313010801
8	M10 Locknut	04872100
9	Belt Dayco Super II A91	228001500
10	20/50 Transmission Rod 2003	313018600
11	20/50 Park Brake Engine Rod 2003	313010701
12	Trunnion (PTO Engage)	18806100
13	20/50 Comp Brake Rod Spring	259405100
14	20/50 Spring Plate (Park Brake)	301119600
15	Bolt M8 x 25	089418600
16	M8 Washer	08819501
17	M10 Locknut	04872100
18	20/50Jockey Plate Assy	321122300
19	Split Pin 1/8” x 1” (Snowblade)	06823300
20	Tractor 20-50 Engine Pulley	327006500
21	7” Pulley (Capitol)	20870700
22	Trunnion Jockey Plate	183018600
23	Washer M8 x 25 x 3 Unplated	089418600
24	M8 Star Washer	088000800
25	20/50 Park Brake Rod Trunnion	183018600
26	20/50 Transmission Front Belt Guide	313006200
27	20/50 LH T/Axle Mounting Bracket	327009300
28	20/50 RH T/Axle Mounting Bracket	301041700
30	Bolt M8 x 45	02941000
31	20/50 Brake Rod Tube	183019100
32	Oilite Bush	52824700
33	Sweeper Jockey Cap	31351100
34	Spring Belt Tension	25849600
35	Belt Retaining Bracket	27105800
36	Nyloc Nut 5/16" UNF	04827500
37	Clutch Jockey Pulley Plate	327008500
38	Belt Dayco Super II A92 (PTO)	22950100
39	Belt Dayco Super II A38 (Transmission)	22950000

A20/50 TRACTOR
HAND CLUTCH/BRAKE CONTROL MODEL
P.T.O TRANSMISSION ASSEMBLY

From Serial No: 00126.....

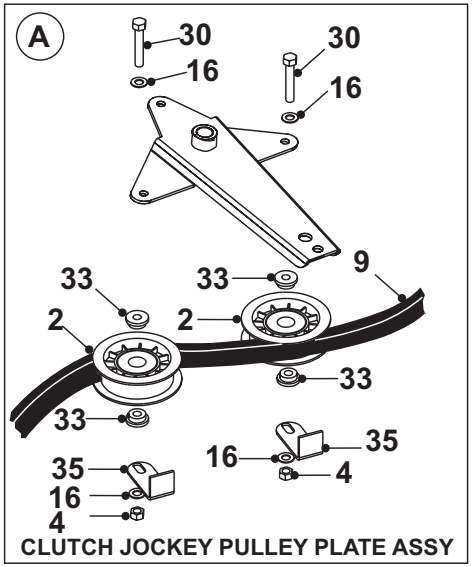

CLUTCH JOCKEY PULLEY PLATE ASSY

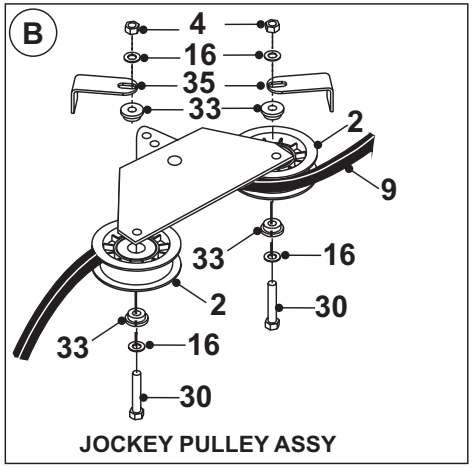

JOCKEY PULLEY ASSY

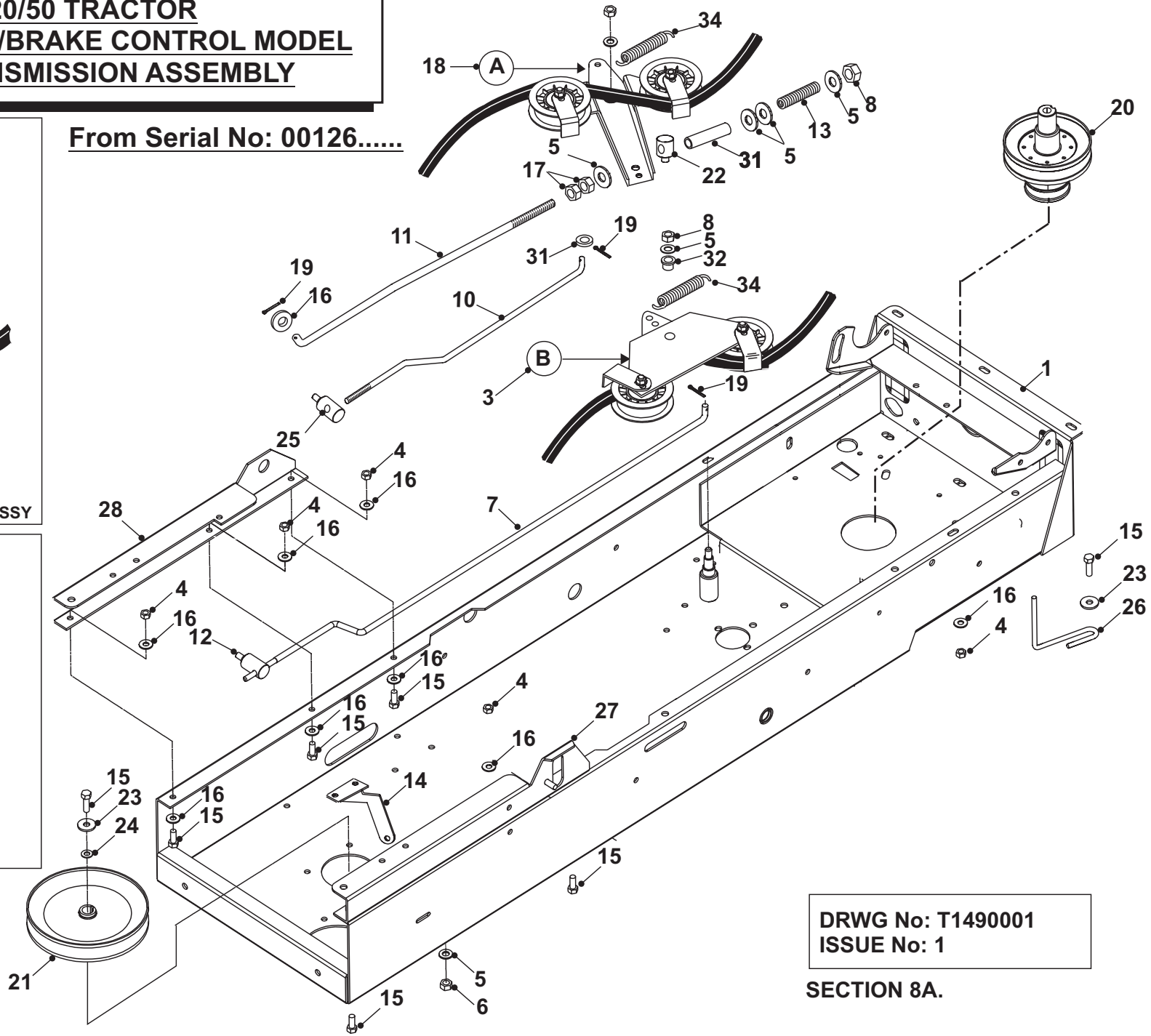

DRWG No: T1490001
ISSUE No: 1

SECTION 8A.

A20/50 TRACTOR
HAND CLUTCH / BRAKE CONTROL MODEL
P.T.O. & TRANSMISSION DRIVE ASSEMBLY
From Serial No: 00126…….
PARTS LIST

	PART DESCRIPTION	PART NUMBER
1	20/50 Chassis	327006301
2	TX PTO Jockey Pulley Plastic (Capitol)	20811500
3	20/50 Jockey Pulley Plate Assy	321122700
4	M8 Nyloc Nut	04850600
5	Washer 10.8ID x 20.7OD x 2Thk	088002400
6	M10 Nyloc Nut	04886100
7	20/50 PTO Engage Rod 2003	313010801
8	M10 Locknut	04872100
9	Belt Dayco Super II A91	228001500
10	20/50 Transmission Rod 2003	313018600
11	20/50 Park Brake Engine Rod 2003	313010701
12	Trunnion (PTO Engage)	18806100
13	20/50 Comp Brake Rod Spring	259405100
14	20/50 Spring Plate (Park Brake)	301119600
15	Bolt M8 x 25	089418600
16	M8 Washer	08819501
17	M10 Locknut	04872100
18	20/50Jockey Plate Assy	321122300
19	Split Pin 1/8” x 1” (Snowblade)	06823300
20	Tractor 20-50 Engine Pulley	327006500
21	7” Pulley (Capitol)	20870700
22	Trunnion Jockey Plate	183018600
23	Washer M8 x 25 x 3 Unplated	089418600
24	M8 Star Washer	088000800
25	20/50 Park Brake Rod Trunnion	183018500
26	20/50 Transmission Front Belt Guide	313006200
27	20/50 LH T/Axle Mounting Bracket	327009300
28	20/50 RH T/Axle Mounting Bracket	301041700
30	Bolt M8 x 45	02941000
31	20/50 Brake Rod Tube	183019100
32	Oilite Bush	52824700
33	Sweeper Jockey Cap	31351100
34	Spring Belt Tension	25849600
35	Belt Retaining Bracket	27105800

A20/50 TRACTOR MK1
TUFF TORQ
HYDROSTATIC TRANSAXLE
ASSEMBLY

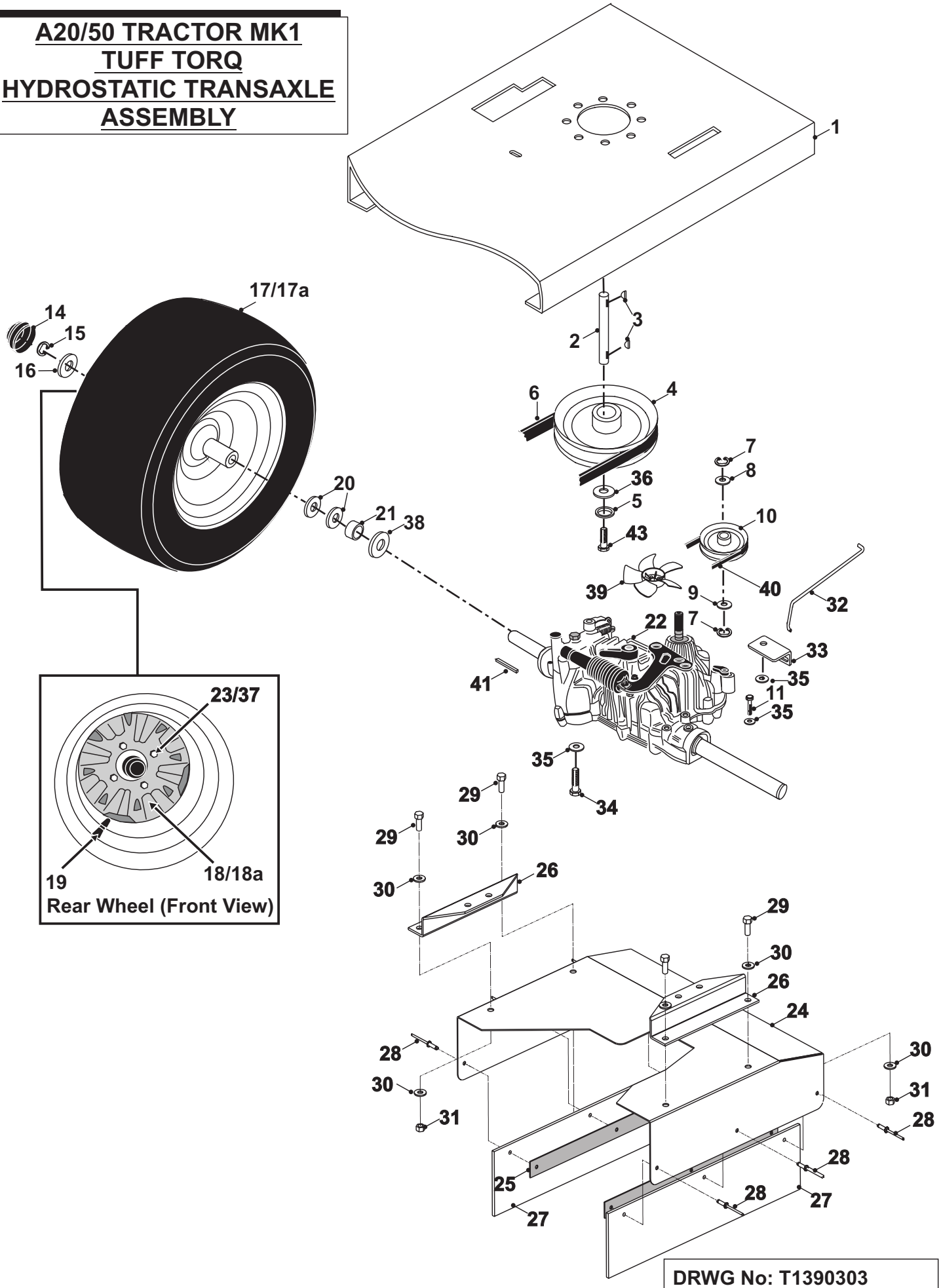

DRWG No: T1390303
ISSUE No: 3

SECTION 9.

A20/50 TRACTOR MK1
TUFF TORQ
HYDROSTATIC TRANSAXLE ASSY
PARTS LIST

	PART DESCRIPTION	PART NUMBER
1	20/50 Chassis	327006300
2	P.T.O. Shaft	31306000
3	Key	09823900
4	7” Pulley (Capitol)	20870700
5	M8 Star Washer (Vac)	088000800
6	Belt A92 Super 2 Transmission C2050	22950100
7	14mm External Mecro	07906600
8	9/16” T4 HP Flat Washer	08917700
9	9/16” T4 LP Washer	08917800
10	20/50 Hydrostatic Box Pulley	20904400
11	Bolt M8 x 65mm	028662700
14	Hub Cap (Moulded)	14811800
15	19mm External Circlip CIA1400/19	07921200
16	Hub Cap Washer	30127800
17	20/50 Rear Wheel Complete	198001500
17a	20/50 Rear Tyre $34.80 @ 1.50	198000400
18	20/50 Rear Wheel Rim	198000500
	Grease Nipple	11898800
	`O’ Ring	24898700
	M8 Star Washer	088000800
18a	20/50 Rear Wheel Hub	198001300
19	Wheel Valve	14889200
20	Washer 3/4” T3 ZP	08822900
21	17mm Wheel Spacer.	31324900
22	Hydro Transaxle K61 20/50	478000000
23	Diesel / A2050 Wheel Stud	128000200
24	20/50 Transaxle Deflector	301048200
25	20/50 Deflector Fixing Strip	301049300
26	20/50 T/Axle Deflector Mounting Bracket	301119500
27	20/50 T/Axle Rubber Strip	148004600
28	Rivet 4.8 x 16mm Alloy Pop 1031-4816	12860100
29	Bolt M8 x 20mm	02825900
30	M8 Washer	08819501
31	M8 Nyloc Nut	04850600
32	20/50 Dump Valve Rod	18322800
33	Dump Rod Bracket Tuff Torq	313010600
34	Bolt M8 x 20mm	02825900
35	M8 Washer	08819501
36	Washer M8 x 25 x 3 unplated	089418600
37	20/50 Wheel Nut	048000800

A20/50 TRACTOR MK1
TUFF TORQ
HYDROSTATIC TRANSAXLE ASSY
PARTS LIST

	PART DESCRIPTION	PART NUMBER
38	Thrust Washer	30791900
39	20/50 Hydro Cooling Fan	148002900
40	Belt A88 Super 2 Pto Belt C2050	22950000
41	Key Rear Wheel	09830700

A20/50 TRACTOR HAND CLUTCH/BRAKE CONTROL MODEL
TUFF TORQ HYDROSTATIC TRANSAXLE ASSY

From Serial No: 00126.....

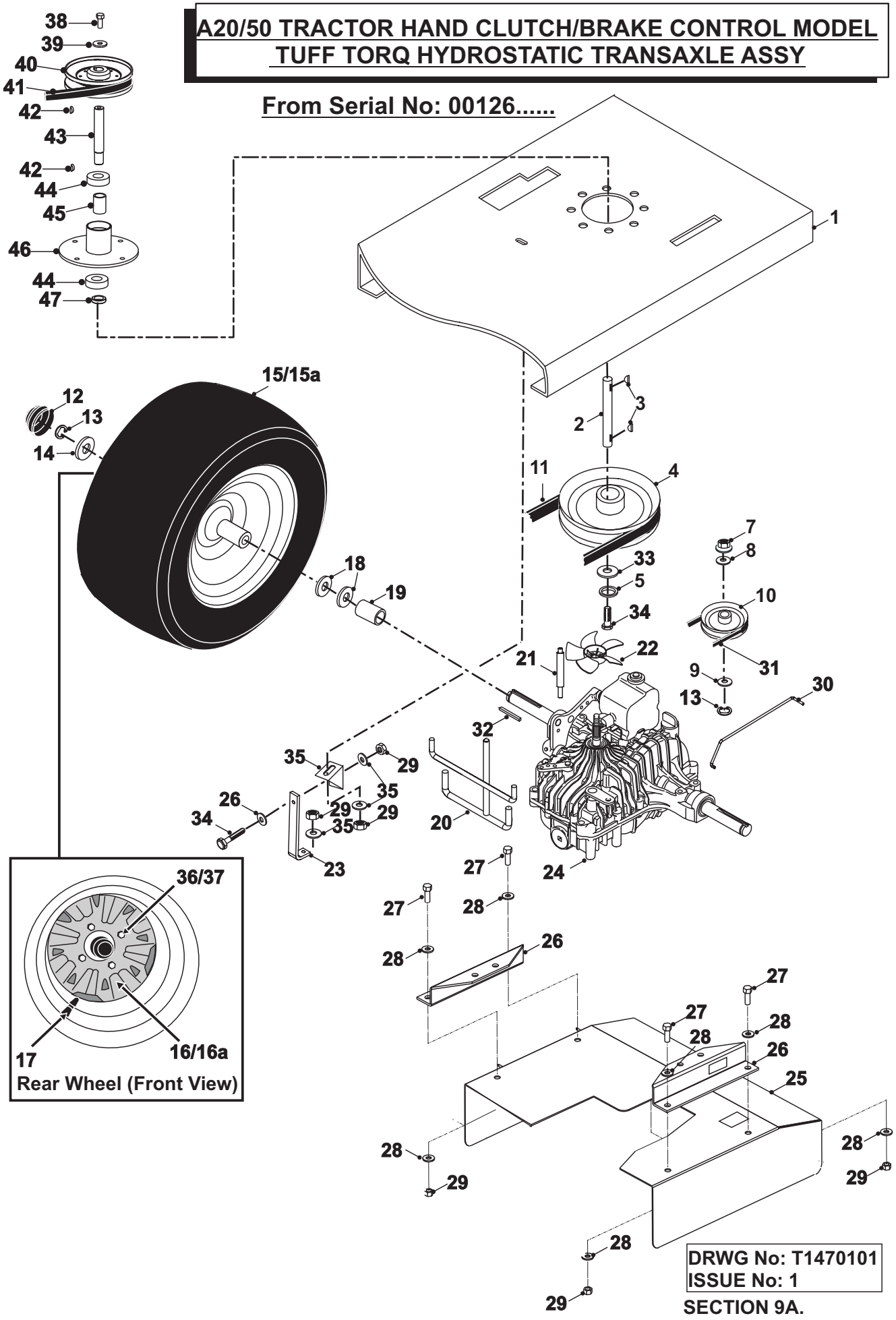

DRWG No: T1470101
ISSUE No: 1

SECTION 9A.

A20/50 TRACTOR HAND CLUTCH / BRAKE CONTROL MODEL
TUFF TORQ HYDROSTATIC
From Serial No: 00126……
PARTS LIST

	PART DESCRIPTION	PART NUMBER
1	20/50 Chassis	327006300
2	PTO Shaft	31306000
3	Key	09823900
4	7” Pulley	20870700
5	M8 Star Washer	088000800
7	M10 Flange Nyloc Nut	049381600
8	2050 Transaxle Fan Washer	089418800
9	9/16” T4 LP Washer	08917800
10	20/50 Hydrostatic Box Pulley	20904400
11	A91 Dayco Super II Belt	228001500
12	Hub Cap (Moulded)	14811800
13	Circlip	078000500
14	K62/66 Transaxle Thrust Washer	307191900
15	20/50 Complete Rear Wheel	198001500
15a	20/50 Rear Tyre	198000400
16	20/50 Rear Rim	198000500
	Grease Nipple	11898800
	`O’ Ring	24898700
	M8 Star Washer	088000800
16a	20/50 Rear Wheel Hub	198001300
17	Wheel Valve	14889200
18	Washer 3/4” T3 ZP	08822900
19	20/50 Wheel Spacer	183018500
20	20/50 Double Belt Guide	327021800
21	20/50 L/H T/Axle Steady Rod	313019100
22	K62 20/50 Plastic Fan	148008000
23	20/50 R/H Transaxle Support Bar	292003500
24	20/50 K62 Tuff Torq	478000400
25	20/50 Transaxle Deflector	301119700
26	20/50 Transaxle Grass Deflector Bracket	301119500
27	Bolt M8 x 20mm	02825900
28	M8 Washer	08819501
29	M8 Nyloc Nut	04850600
30	20/50 Dump Valve Rod	313010600
31	A91 Dayco Super 11 Belt	228001500
32	Key Rear Wheel	09830700
33	Washer M8 x 25 x 3 unplated	089418600
34	Bolt M8 x 20mm	02825900
35	Torque Bracket	30137700
36	Diesel / A2050 Wheel Stud	128000200
37	20/50 Wheel Nut	048000800

A20/50 TRACTOR HAND CLUTCH / BRAKE CONTROL MODEL
TUFF TORQ HYDROSTATIC
From Serial No: 00126…..
PARTS LIST

	PART DESCRIPTION	PART NUMBER
38	Bolt M8 x 20mm	02825900
39	M8 Washer	08819501
40	PTO Pulley 5” Universal	208000400
41	Belt A92 Super 2	22950100
42	Key	09823900
43	PTO Shaft	32306000
44	Bearing	10802200
45	Spacer PTO Centre	31334800
46	PTO Bearing Housing	32700300
47	PTO End Spacer	31306200
48	Transaxle Shock Absorber	Tuff Torq No 19215489150

A20/50 ELECTRICAL PARTS (PRE OMS)

1.MAIN WIRING LOOM PT/ NO: 448004100
2. H.E. DECK / SWEEPER LOOM PT/NO: 44948700**/448005900##
3. NET EMPTYING LOOM KIT PT/NO:448004300

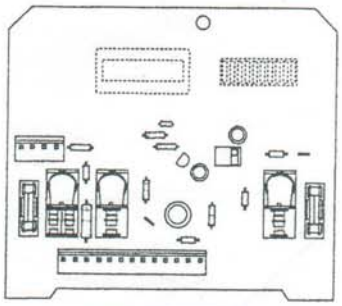

4. P.C.B.
PT/NO: 448001900

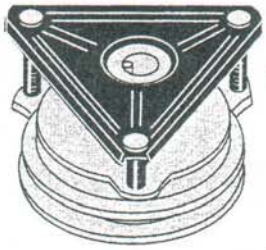

5. WARNER CLUTCH
PT/ NO: 44815200

6. ACTUATOR A20/50; DECK / SWEEPER / NET
PT/NO: 448002800**

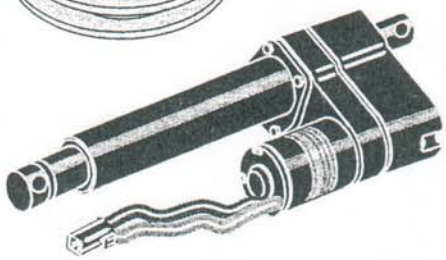

6. ACTUATOR A20/50; DECK / SWEEPER / NET
PT/NO: 448005800 ##

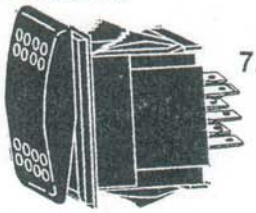

7. DECK / NET EMPTY SWITCH
PT/NO: 448001501

8. SWEEPER LIFT SWITCH
PT/NO: 448001401

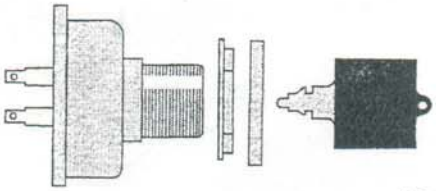

9. IGNITION SWITCH - PT/NO: 44812900
10. IGNITION FIXING NUT - PT/NO: 52813200
11. IGNITION CAP BEZEL - PT/NO: 52813100
12. IGNITION KEY - PT/NO: 52813000

13. DECAL - PCB HOUR METER / CUTTER DECK HEIGHT
PT/NO: 358002800

14. DECAL - HEADLIGHTS / IGNITION LIFT
PT/NO: 358002600

15. DECAL - CLUTCH / CHOKE / LIFT
PT/NO: 358002200

16. SOLENOID PT/No 44814801

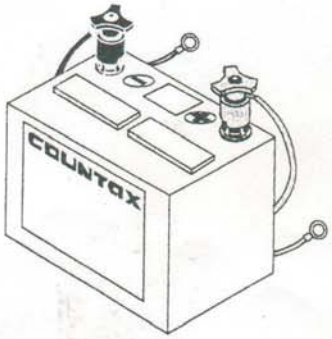

17. BATTERY 12V PT/No 45814100
18. BATTERY CONNECTOR (+) (RED) PT/No 44812701
19. BATTERY CONNECTOR (-) (BLACK) PT/No 44812801
20. BLACK LEAD BATTERY TO CHASSIS PT/No 44876900
21. RED LEAD BATTERY TO SOLENOID PT/No 44877000

DRWG No: T1350301
ISSUE No: 1

A20/50 ELECTRICAL
(MODELS WITH RPM READING)
PARTS LIST

	PART DESCRIPTION	PART NUMBER
1	Control Loom A20/50	448004100
2	Net Emptying Actuator Loom A20/50 HE Loom C-Series Tractor	448004800** 448005900##
3	A20/50 PGC Emptying Loom Kit	448004300
4	PC Board HE 98 (Hr Meter) / Dk Hgt Mods	448001903
5	A20/50 Electrical Clutch	44815200
6	Deck Actuator (upto serial no. 00718) Actuator Warner LA10 (after serial no. 00718…)	448002800** 448005800##
7	Deck / Net / Empty Switch	448001501
8	Sweeper Lift Switch	448001401
9	Ignition Switch	44812900
10	Nut (Accurate 125)	52813200
11	Bezel (Accurate 121)	52813100
12	Key (Accurate 101)	52813000
13	PCB HE Decal 98 Gloss Velvet Lexan 8A35	358002800
14	Head Light / Ignition / Lift Decal 98	358002600
15	Clutch / Choke / Lift Decal	358002200
16	Starter Solenoid	44814801
17	Battery	45814100
18	Positive Battery Terminal	44812701
19	Negative Battery Terminal	44812801
20	Rdr Bat To Earth Lead	44876900
21	Battery Lead positive Rdr 97	448001000

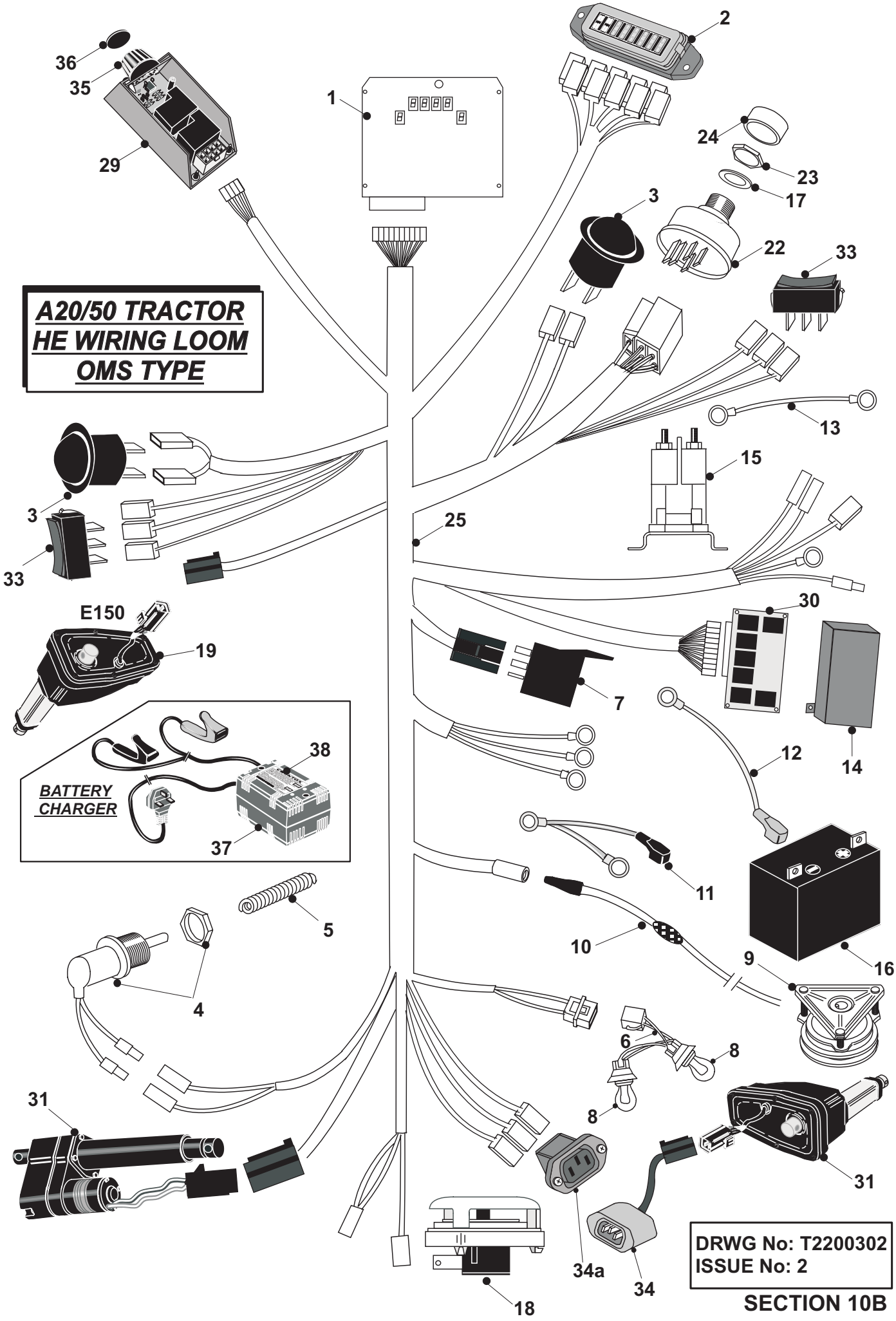

DRWG No: T2200302
ISSUE No: 2

SECTION 10B

A20/50 TRACTOR
H.E. LOOM
(MODELS WITH RPM READING)
PARTS LIST

	PART DESCRIPTION	PART NUMBER
1	Main Control PCB 2003 c/w Technical Bulletin	448009400
2	Fuse Box Holder 2002 C-Series	301139400
3	Switch Momentary on 2003 (R13208FAAA)	448008700
4	Brake Switch c/w Spade Terminals	44945001
5	Safety Switch Spring	25813801
6	2003 C-Series Headlight Loom	448010400
7	Electric Relay 12v / 30amp Omron	449559100
8	Bulb C-Series 2002 PY21W	448008500
9	Warner Electric Clutch 20/50	44815200
10	Clutch Loom Magstop Modular	44946800
11	18 & 20hp Battery Lead	448010000
12	Earth Lead 2003	44812402
13	Start Lead 3923	44812500
14	HE PCB Cover 2003	307187800
15	Starter Solenoid	44814801
16	Battery – Dry Charged 18/50	458141300
17	Westwood Twin Ignition Washer 23 x 16 x 2mm	089418900
18	Seat Switch Milsco Seat 97)	44949500
19	Actuator c/w Potentiometer	448007700
20	10AMP Fuse(not illustrated)	44889500
21	Fuse Spade 20AMP(not illustrated)	44835000
22	Ignition Switch	44812900
23	Ignition Switch Steel Lock Nut M16	048001300
24	Bezel (Accurate 121)	52813100
25	HE Loom + Fuel Sender 2003 C-Series Loom + Fuel Sender 2003	448015300 448015100
26	Tie Wrap (Not Illustrated)	52825400
27	Tie Wrap Mount (Not Illustrated)	52816800
28	Tie Wrap Self Adhesive (Not Illustrated)	52816700
29	Dial Height 15 PCB c/w Bracket & Bulletin	449560600
30	HE PCB For LA10 Actuators & Net 2003	448009200
31	Deck Actuator (upto serial no: 00718) Actuator Warner LA10 (after serial no:00718)	448002800 448005800
32	Fuse 30AMP Spade D18/50,Diesel Fuse Box – not illustrated	449559200
33	Switch on / off / on 2003 (R1311DAAA)	448008900
34	A20/50 PGC Net Emptying Loom	448004300
34a	Rear Socket For Net Emptying Loom –Trac	448005600
35	2002 Lift Kit Collet Knob	148010600
36	Collet Knob Cap – Rotary HE PCB 2001	148011000
37	Battery Charger	449563000
38	Battery Charger Decal	359509600
39	Baterry Charger Instructions (not Illustrated)	36919400

A20-50 REAR DISCHARGE DECK

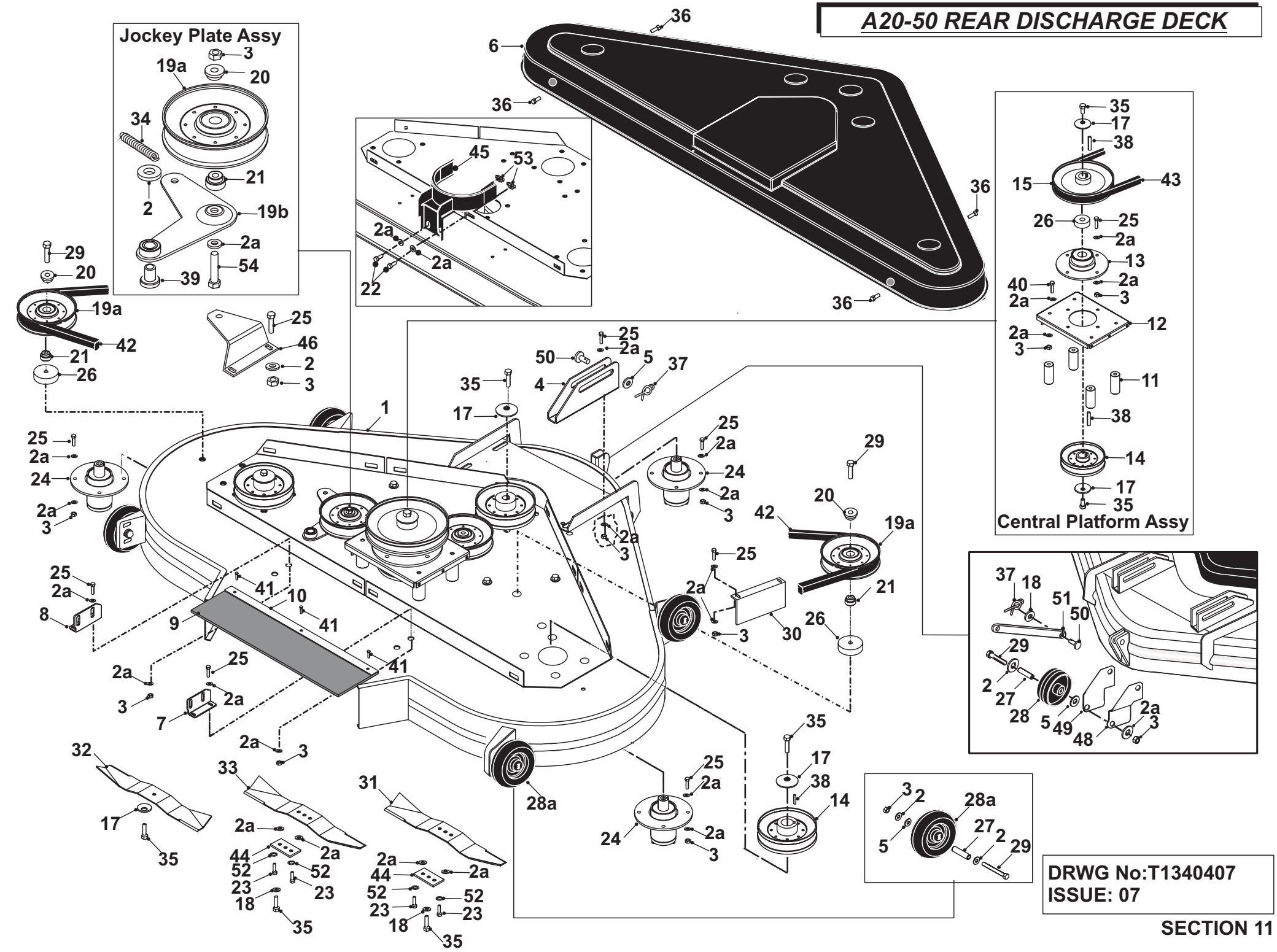

A20-50 TRACTOR
REAR DISHARGE DECK
PARTS LIST

	PART DESCRIPTION	PART NUMBER
1	50” IBS Deck Shell	321001301
2	Washer M8 x 25 x 3mm	089418600
2a	Washer M8	08819500
3	M8 Nyloc Nut	04920100
4	Front Deck Hanging Bracket	302005000
5	M8 Form `B’ Washer	088001800
6	Plastic Deck Cover	148005000
7	50” IBS Universal Deck Bracket RH	307186700
8	50” IBS Universal Deck Bracket LH	307186600
9	Rubber Flap	14868900
10	50” Deck Rubber Fixing Strip	301050900
11	Deck Spacer	183012000
12	50” Deck Platform	301050800
13	50” Deck Bearing Housing	405005000
14	Steel Deck Pulley	20869500
15	Deck Drive Pulley	20870200
17	Dome Washer 1.3/4” od x 3/8” id x 1/8” dome	08819900
18	M10 Washer	088002400
19a	Steel Deck Pulley c/w Bearing	20869600
19b	20/50 Deck Tension Pulley Bracket	327021600
20	Sweeper Jockey Cap	31351100
21	Spacer Jockey Wheel	18831600
22	Bolt M8 x 20mm	02825900
23	Bolt M8 x 15mm	01864800
24	Short Shaft Bearing Housing	40503704
25	Bolt M8 x 25mm	01902300
26	Deck Idler Pulley Spacer	18300420
27	Scuff Wheel Hub	31337600
28	Anti – Scalp Wheel ½” Bore	19905500
28a	Anti – Scalp Wheel March 2000	149495800
29	S/Screw M8 x 70mm	01850700
30	IBS Deflector Plate	301050600
31	Blade 19” Right Hand	169381300
32	Blade 19” Left Hand	169381400
33	17.5” Right Hand Blade 3 Hole	16929000
34	Deck Tension Spring	25906200
35	Bolt M10 x 30mm	02886000
36	S/ScrewM5 x 16mm	02912200
37	Rue Clip	11836700

38	Key 1/4" Square x 1 ¼ "	09853400
39	Deck Hanging Pivot	18321000
40	M8 x 75mm Hx Hd Bolt Zinc Plt & Clear Passivated	01832300
41	Rivet 4.8mm x 16mm	12860100
42	Deck Belt BB155	22950200
43	B56 Belt Dayco Super 2	22940100
44	Tab Washer	27111200
45	50" Rear Discharge Deck Belt Guard	327014300
46	Deck Bracket	301057300
47	Deck Spacer Plate	301058800
48	50" Decks Centre Scalp Bracket Formed	307022600
49	50" Deck Centre Scalp Wheel Flat Plate	307022700
50	Deck Push Rod Pin	31338200
51	Deck Tension Bar	29203700
52	M8 Star Washer	088000800
53	M8 Captive Nut	04825800
54	M8 x 40mm Bright Zinc Plate Bolt	018003200

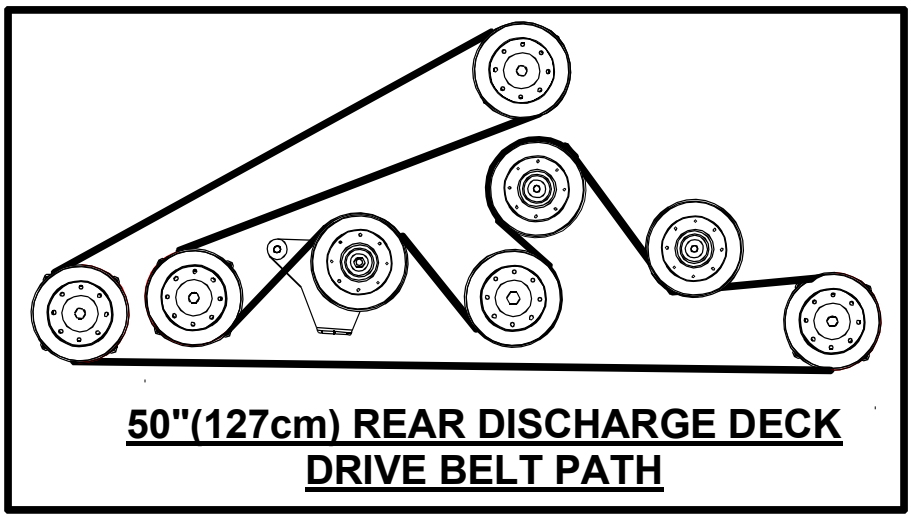

50"(127cm) REAR DISCHARGE DECK DRIVE BELT PATH

A20/50 MULCHER DECK

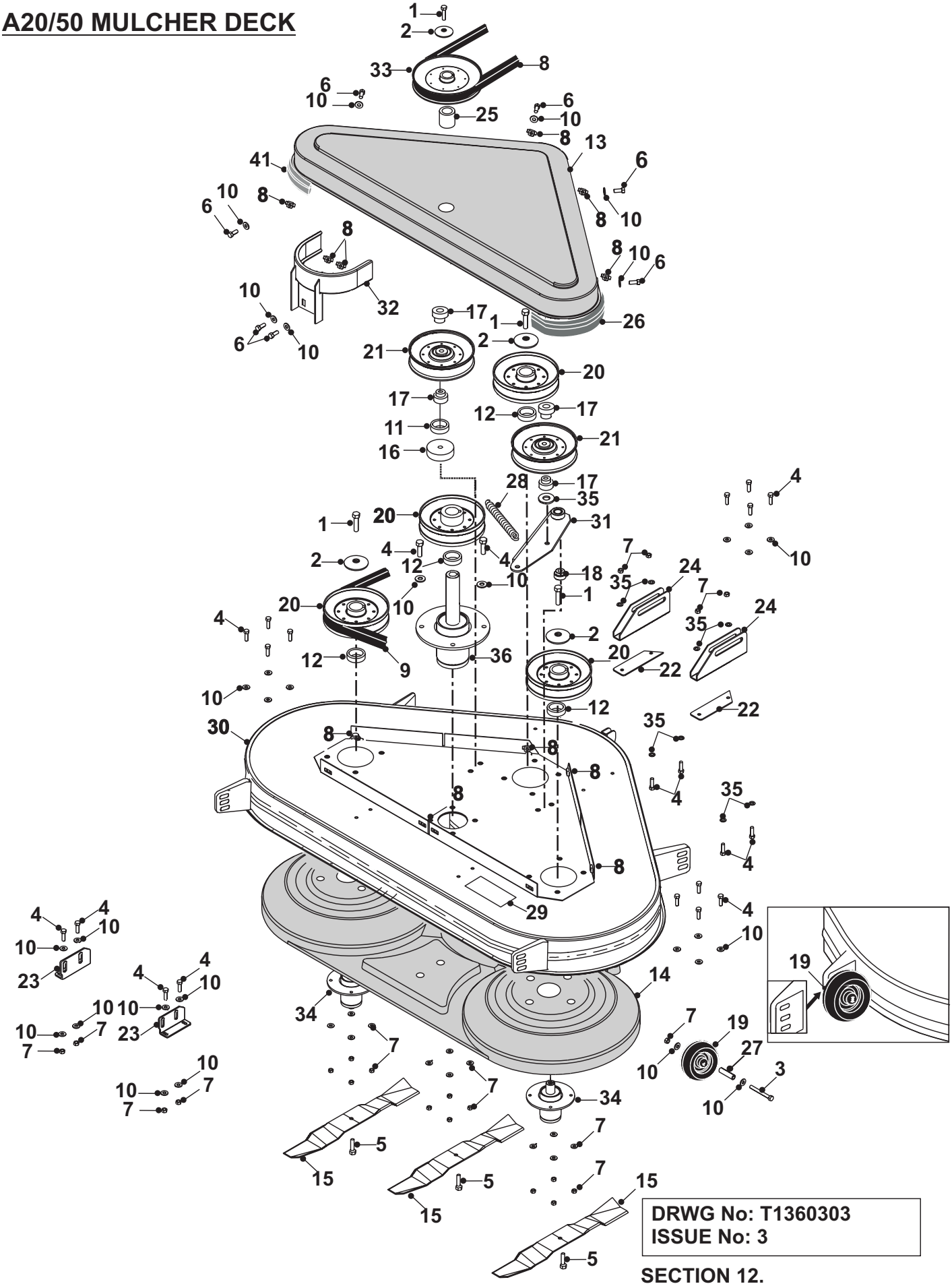

DRWG No: T1360303
ISSUE No: 3

SECTION 12.

A20/50 MULCHER DECK
PARTS LIST

	PART DESCRIPTION	PART NUMBER
1	M8 x 35mm Bolt	01935700
2	Dome Washer 1.3/4" x 3/8" x 1/8" dome	08819900
3	M8 x 70mm Hex Bolt Zinc Plated & Clear Passivated	028663200
4	Bolt M8 x 35mm	018001600
5	Bolt M10 x 35mm	01935700
6	6 x8 Pozi S/S S/Tap	02913100
7	M8 Nyloc Nut	04850600
8	B57 Belt	22871200
9	Belt BB112 50" Mulch deck	228000900
10	Washer M8 x 25 x 3mm unplated	089418600
11	PTO Bridge Spacer HE Tractor 1/95	31326100
12	D1850 50" IBS / 50" Mulch Top Pulley Spacer	183023100
13	Deck Lid Cover 50" Mulcher C2050	148003000
14	Deck Inner 50" Mulcher C2050	148003100
15	Blade 19" Right Hand Mulcher 1 Hole	16938100
16	Deck Hanging Bracket Pivot Front	18300420
17	Deck Hanging Bracket Pivot Front	18321000
18	50" Mulcher Jockey Plate Pivot	189498400
19	Bore Anti - Scalp Wheel ½" bore	19905500
19a	Anti – Scalp Wheel March 2000	149495800
20	Steel Deck Pulley	20869500
21	Steel Deck Pulley c/w Bearing	20869600
22	Spacer 20/50	301043000
23	44" Mulch L/H Rear Deck Bracket 44" Mulch R/H Rear Deck Bracket	301062700 301062800
24	Front Deck Hanging Bracket	302005000
25	Deck Drive Pulley Spacer	31328301
26	Bonnet Rubber Trim (Temporary Fixing)	14896100
27	Scuff Wheel Hub	31337600
28	42" Deck Tension Spring	25906200
29	Decal 50" Mulcher Deck May 01	358009701
30	50" Mulcher Deck Shell	327006600
31	50" Mulch Jockey Plate Welded	327362400
32	18/50 Mulch Deck Drive Belt Guard	327008700
33	Deck Drive Pulley c/w 31328301 big spacer	20870200
34	Short Shaft Bearing Housing	40503704
35	Washer M8	088000200
36	Deck Bearing Housing – Long Shaft	40503504

A20/50 TRACTOR
HAND CLUTCH/BRAKE CONTROL MODEL
RUNNING BOARD
& REAR BODY ASSEMBLIES

From Serial No: 00126.....

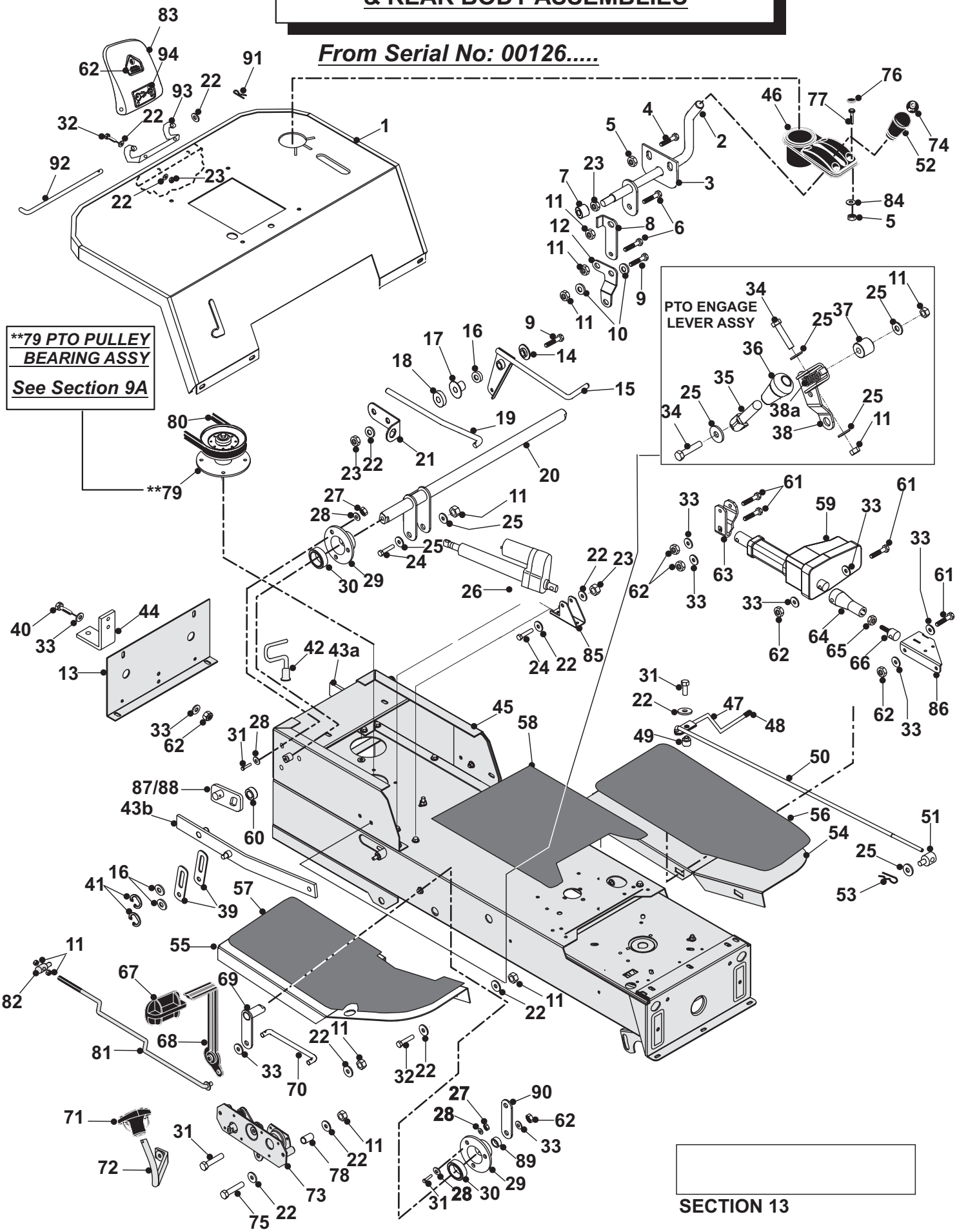

SECTION 13

A2050 HAND CLUTCH / BRAKE CONTROL MODEL RUNNING BOARD & REAR BODY ASSY

	PART DESCRIPTION	PART NUMBER
1	20/50 Rear Body Panel	328957100
2	20/50 Park Brake Lever	327022100
3	20/50 Park Brake Lever Support Plate	301119100
4	Bolt M6 x 20mm (Vac)	018000300
5	Nut M6 Nyloc	04920500
6	M8 x 30mm Roofing Bolt	01902600
7	20/50 Park Brake Lever Spacer	183018700
8	20/50 Park Brake Upper Link Plate	301120100
9	Bolt M8 x 50mm	018001800
10	Washer 25mm	028001800
11	M8 Nyloc Nut	04920100
12	20/50 Park Brake Lower Link Plate	301120200
13	20/50 Rear Chassis Panel	301041600
14	Bonnet Pivot Boss	31306100
15	20/50 Pedal Plate	321122200
16	M12 Washer	088001200
17	Deck Tension Plate Spacer	31329000
18	PTO Bridge Spacer	31326100
19	20/50 Diff. Lock Control Rod	313010400
20	20/50 Sweeper Lift Bar	327009400
21	Park Brake Switch Brkt long	307022200
22	M8 Washer	08819501
23	M10 Nyloc Nut	04886100
24	M8 x 40mm Bright Zinc Plate Bolt	018003200
25	Washer M8 x 25 x 3 Unplated	089418600
26	Deck Actuator	448002800
27	M5 Nyloc Nut	04885900
28	M5 Washer	088002800
29	Bearing Housing 17mm	27106601
30	Bearing	10811600
31	Bolt M5 x 16mm	028003500
32	Roofing Bolt M8 x 20mm	01886200
33	Washer 10.81 i.d. x 20.70 o.d. HD	088002400
34	M8 x 40mm Bright Zinc Plate Bolt	018003200
35	PTO Engage Lever	32708700
36	Lever Knob	14804800
37	Spacer 20/50 PTO Plt	31329201
38	PTO Plate HE & 20/50	30134501
38a	Spring	25831100
39	HE Sweeper Lift Plate	30133500
	HE Tractor Sweeper Lift Special** (Scarifier Use)	301132700**
40	M10 x 110mm Bolt s/c	01915300
41	E-Clip M12 Plated	078000800
42	Sweeper Belt Guide Pin	32723800
43a	HE Sweeper Lift Arm L/H	32721100

A2050 HAND CLUTCH / BRAKE CONTROL MODEL RUNNING BOARD & REAR BODY ASSY

	PART DESCRIPTION	PART NUMBER
1	20/50 Rear Body Panel	328957100
2	20/50 Park Brake Lever	327022100
3	20/50 Park Brake Lever Support Plate	301119100
4	Bolt M6 x 20mm (Vac)	018000300
5	Nut M6 Nyloc	04920500
6	M8 x 30mm Roofing Bolt	01902600
7	20/50 Park Brake Lever Spacer	183018700
8	20/50 Park Brake Upper Link Plate	301120100
9	Bolt M8 x 50mm	018001800
10	Washer 25mm	028001800
11	M8 Nyloc Nut	04920100
12	20/50 Park Brake Lower Link Plate	301120200
13	20/50 Rear Chassis Panel	301041600
14	Bonnet Pivot Boss	31306100
15	20/50 Pedal Plate	321122200
16	M12 Washer	088001200
17	Deck Tension Plate Spacer	31329000
18	PTO Bridge Spacer	31326100
19	20/50 Diff. Lock Control Rod	313010400
20	20/50 Sweeper Lift Bar	327009400
21	Park Brake Switch Brkt long	307022200
22	M8 Washer	08819501
23	M10 Nyloc Nut	04886100
24	M8 x 40mm Bright Zinc Plate Bolt	018003200
25	Washer M8 x 25 x 3 Unplated	089418600
26	Deck Actuator	448002800
27	M5 Nyloc Nut	04885900
28	M5 Washer	088002800
29	Bearing Housing 17mm	27106601
30	Bearing	10811600
31	Bolt M5 x 16mm	028003500
32	Roofing Bolt M8 x 20mm	01886200
33	Washer 10.81 i.d. x 20.70 o.d. HD	088002400
34	M8 x 40mm Bright Zinc Plate Bolt	018003200
35	PTO Engage Lever	32708700
36	Lever Knob	14804800
37	Spacer 20/50 PTO Plt	31329201
38	PTO Plate HE & 20/50	30134501
38a	Spring	25831100
39	HE Sweeper Lift Plate	30133500
	HE Tractor Sweeper Lift Special** (Scarifier Use)	301132700**
40	M10 x 110mm Bolt s/c	01915300
41	E-Clip M12 Plated	078000800
42	Sweeper Belt Guide Pin	32723800

A20/50 HAND CLUTCH / BRAKE CONTROL MODEL RUNNING BOARD & REAR BODY ASSY

43a	HE Sweeper Lift Arm L/H	32721100
43b	HE Sweeper Lift Arm R/H	32720300
44	Tow Bracket	29200101
45	20/50 Seat Box	327010400
46	Handbrake Cup Holder	148013900
47	A2050 Deck Tension Lever	321122800
48	Plastic Lever Cap	14946200
49	Deck Height Pivot Boss	18317400
50	Deck Tension Rod	31805600
51	Trunnion (Deck Cradle)	18805500
52	C-Series Handbrake Handle Knob	187185300
53	Rue Clip	11836700
54	20/50 L/H Running Board	321122400
55	20/50 R/H Running Board	321122500
56	20/50 L/H Running Mat	148007200
57	20/50 R/H Running Mat	148007300
58	20/50 Centre Running Mat	148007400
59	Actuator c/w Potentiometer	448007700
60	Tractor HE Crossbar / TX Spacer	31323502
61	M10 x 60mm Coachbolt zinc / clear	01800500
62	PTO Danger Decal	35809500
63	Plate	301005500
64	Deck Lift Actuator Adjuster Body	187184800

** Item 9. This Lift Plate to be used when 30133500
Does not give enough lift.

65	Nut M12	049381200
66	Deck Lift Actuator Adjustment Screw	187184900
67	Large Forward Pedal Rubber	148013700
68	2002 Cassette Forward Pedal Welded	327361200
69	20/50 Brake Link Bracket	327022200
70	20/50 Forward / Reverse Cassette Rod	328953000
71	Small Reverse Pedal Rubber 2002	148013800
72	2002 Cassette Reverse Pedal	327361300
73	2002 C-Series Cassette	409427400
74	Handbrake Handle Badge 2002	359505100
75	Bolt M8 x 65mm	028662700
76	M6 Socket Screw Cap	148014300
77	Screw M6 x 20mm	01800300
78	Transaxle Deflector Spacer	31322200
79	5” PTO Pulley	208000400
80	Belt A49	22923400
81	2002 Cassette Forward / Reverse Rod	313022000
82	Foot Control Forward / Reverse Trunnion	187186500

A20/50H TRACTOR
HAND CLUTCH/BRAKE CONTROL MODEL
RUNNING BOARD
& REAR BODY ASSEMBLIES

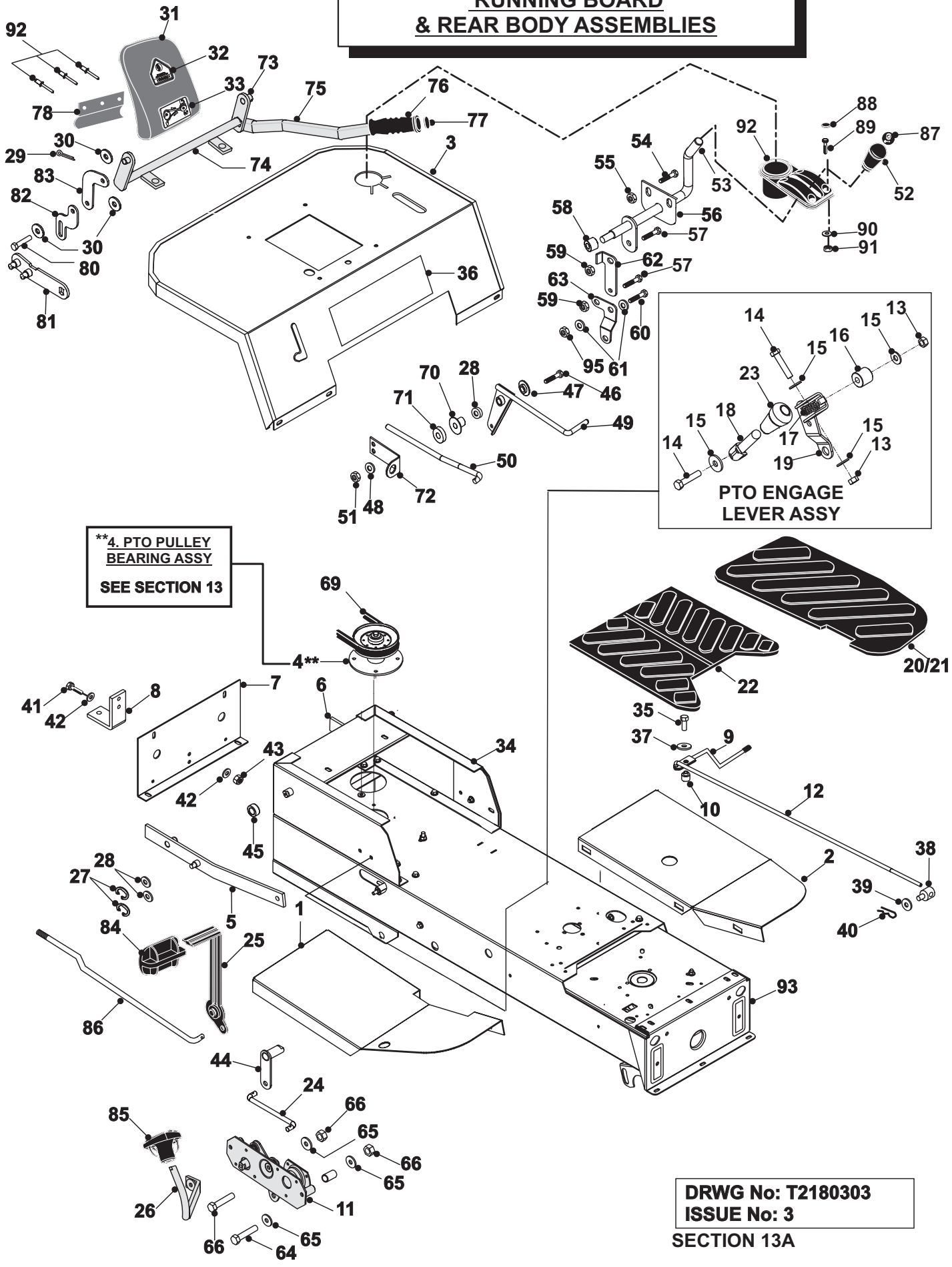

DRWG No: T2180303
ISSUE No: 3

SECTION 13A

A20/50H HAND CONTROL MODEL
RUNNING BOARD
& REAR BODY ASSEMBLIES
PARTS LIST

	PART DESCRIPTION	PART NUMBER
1	20/50 Running Board R/H	321122500
	20/50 Running Board R/H (for Germany)	327010100
2	20/50 Running Board L/H	321122400
	20/50 Running Board L/H (for Germany)	327010000
3	20/50 Rear Body Panel Welded	328954600
4	5” PTO Pulley	208000400
5	Sweeper Lift Arm R/H	32720300
6	Sweeper Lift Arm L/H	32721100
7	20/50 Rear Chassis Panel	301041600
8	Tow Bracket	29200101
9	A2050 & D1850 Deck Tension Lever	321122800
10	Deck Height Pivot Boss	18317400
11	99 C-Series Transmission Cassette	405006000
12	Deck Tension Rod	31805600
13	Nyloc Nut 5/16” UNF	04827500
14	Bolt 5/16” UNF x 1.1/2” HT Z/P	01820700
15	Washer 5/16” i.d x 1” o.d HD	08819800
16	Spacer	31329201
17	Spring	25831100
18	PTO Engage Lever HE & 20/50	32708700
19	PTO Plate	30134501
20	Foot Mat R/H A20/50	148008800
21	Foot Mat R/H A20/50 German Model	148008600
21	Foot Mat L/H A20/50	148008900
22	Centre Runner Mat	14800800
23	Lever Knob	14804800
24	20/50 Forward / Reverse Cassette Rod	313018900
25	Forward Pedal A2050 HC-BC Models	321123900
26	Reverse Pedal A2050 HC/BC Models	321124000
27	E-Clip M12 Plated	078000800
28	Washer 1/2” x 1” T3 L/P Z/P	08822500
29	2mm Rue Clip	06849100
30	Washer 5/16” T4 zinc plated	08819700
31	PTO Flap Shell Tractor Manual (Plastic)	149496400
32	PTO Danger Label	35809500

33	Sweeper Belt Decal (Symbols Only)	35809400
34	20/50 Rear Seat Box	327010400
36	Decal Mulcher	35945900
38	Trunnion (Deck Cradle)	18805500
39	Washer 5/16” i.d. x 1” o.d. HD	08819800
40	Rue Clip	11836700
41	M10 x 110mm Bolt s/c (Kohler 14HP Only)	01915300
42	Washer 10.81 i.d. x 20.70 d x 2mm Thk	088002400
43	M10 Locknut	04872100
44	20/50 Brake Link Bracket	327022200
45	Lift Bar Spacer HE	31323500
46	Bolt 5/16” UNF x 2”	01820900
47	Bonnet Pivot Boss	31306100
48	Washer 5/16” T4 zinc plated	08819700
49	20/50 Pedal Plate	321122200
50	20/50 Diff. Lock Control Rod	313010400
51	Nyloc Nut 5/16” UNF	04827500
52	2002 C-Series Handbrake Handle	187185300
53	20/50 Park Brake Lever	327022100
54	Bolt M6 x 20mm (Vac)	018000300
55	Nut M6 Nyloc	04920500
56	20/50 Park Brake Lever Support Plate	301119100
57	Bolt M8 x 30mm Coachbolt	018001200
58	20/50 Park Brake Lever Spacer	183018700
59	Nut M8	04850600
60	Bolt M8 x 50mm	018001800
61	Washer 25mm	028001800
62	20/50 Park Brake Upper Link Plate	301120100
63	20/50 Park Brake Lower Link Plate	301120200
64	Bolt ¼” x 3”	028662400
65	Washer 5/8” T3 LP	08822700
66	Bolt ¼” x 2” HT	01857700
67	Nut Nyloc ¼” UNF	04819400
68	Transaxle Deflector Spacer	31322200
69	Belt A49	22923400
70	Jockey Plate Pivot IBS Deck	31329000
71	PTO Bridge Spacer HE Tractor 1/95	31326100
72	A,D,K,V Brake Switch Plate 2003	307190600

73	V2050 Sweeper Lift Lever Shaft Link Plate	327181300
74	V2050 Sweeper Lift Handle Tube	327181000
75	V2050 Sweeper Lift Handle	327181200
76	Soft Handle Grip (Black) c/w 14880500	38936500
77	Bag Tipping Handle Plug	14880500
78	PTO Flap Hinge – Tractor Manual (Plastic)	149496500
79	Pop Rivet 5 x 10mm	12824400
80	Set Screw 5/16" x ¾"	02827600
81	A2050H Sweeper Lift Arm L/H A2050H Sweeper Link Arm R/H	328954500 328954400
82	A2050H Sweeper Lift Lower Link	307189900
83	A2050H Sweeper Lift Upper Link	307190000
84	C-Series Fwd Large Pedal Rubber 2002	148013700
85	C-Series Small Rev. Pedal Rubber 2002	148013800
86	20/50 Forward Reverse Rod	313004800
87	C-Series H/Brake Handle Badge	359505100
88	M6 Socket Screw Cap	148014300
89	Screw M6 x 20mm (Vac)	018000300
90	Washer 9/16"	08827800
91	Nut M6 Nyloc	04920500
92	C-Series 2002 Cup Holder	148013900
93	Chassis	327023300

A20/50 TRACTOR
POWERED GRASS COLLECTOR

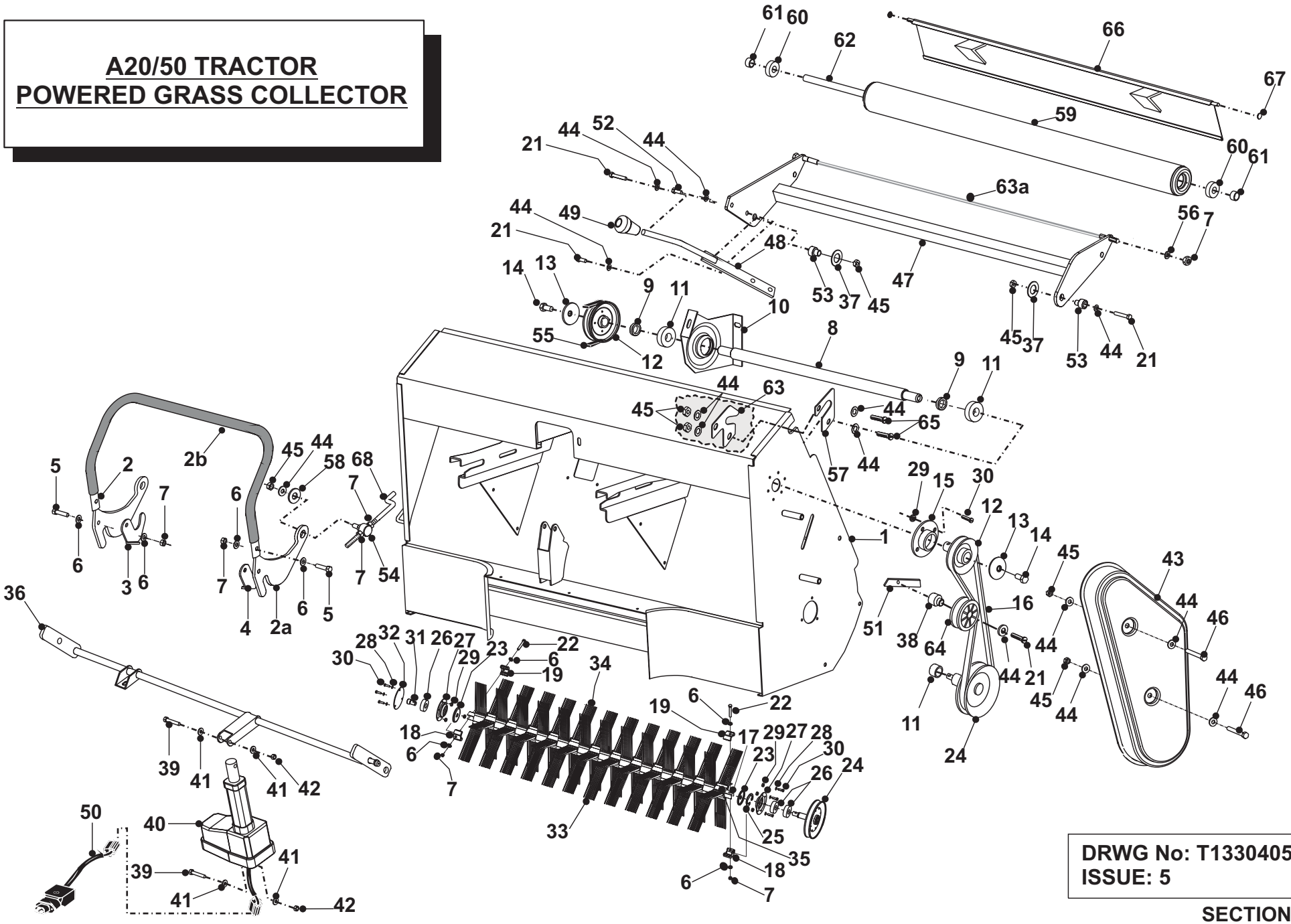

DRWG No: T1330405
ISSUE: 5

SECTION:14

A20/50 TRACTOR
POWERED GRASS COLLECTOR
PARTS LIST

	PART DESCRIPTION	PART NUMBER
1	PGC Body 2003 Welded Cross Shaft (from July 2003)	328955700
2	Sweeper Locking Handle Tube	178966300
2a	PGC Locking Handle Plate (from serial no. 0103..)	307024500
2b	Sweeper Black Grip 22" Lx 0.5 i.d x 0.2" (from serial no.0103…)	149496600
3	L/H PGC Lever Lock	30149800
4	R/H PGC Lever Lock	30150300
5	Bolt M6 x 25mm Plated	028002900
6	Washer ¼" LP	08825600
7	Nut M6 Nyloc	04920500
8	Sweeper Idler Shaft	183009800
9	Spacer Idler Shaft	48306200
10	PGC Shaft Carrier	301043800
11	Bearing	10811600
12	3" Pulley (Non Keyed)	32727600
13	Dome Washer 1.3/4" o.d. x ¾" x 1/8" dome	08819900
14	Bolt M10 x 20mm	02800300
15	Bearing Housing 17mm	27106601
16	A38 Super 2 PGC Side Belt	22950300
17	PGC Sweeper Brush Stock	174004401
18	Brush Drive Moulding Large	14832900
19	Brush Drive Moulding Small	14834100
20	Bolt M8 x 20mm	02800300
21	Bolt M8 x 50mm	018001800
22	M6 x 45mm Hex Head BZP	018004000
23	Slinger	32121800
24	Sweeper Pulley & Shaft	327002600
25	Circlip (PGC Pulley & Shaft)	07914800
26	Bearing	10811600
27	Bearing Housing 17mm	27106601
28	M5 Washer	08911500
29	M5 Nyloc Nut	04885900
30	M5 x 16mm Pozi Pan Head Z/P	02940500
31	Brush Stock Spindle (Short)	31323900
32	Sweeper Bearing Cover	30117500
33	Sweeper Bristle Non Webbed	14898100

A20/50 TRACTOR
POWERED GRASS COLLECTOR
PARTS LIST

	PART DESCRIPTION	PART NUMBER
34	Sweeper Bristle Webbed	14936300
35	Bristle Boss	14833000
36	PGC Cross Shaft	327362200
37	Washer M8 x 25 x 3mm	089418600
38	Sweeper Jockey Spacer	31350400
39	Bolt M10 x 45mm	018005500
40	Lift Actuator	448002800
41	Washer M10	088002400
42	M10 Nyloc Nut	04886100
43	Plastic Pulley Cover	14848600
44	M8 Washer	08819501
45	M8 Nyloc Nut	04920100
46	Bolt M8 x 65mm	028662700
47	Roller Carrier 2003 (from serial no. 0103…)	327172401
48	Sweeper Roller Height Handle (from serial no 0103…)	327171800
49	Lever Knob	14804800
50	Net Emptying Actuator Loom	448004800
51	Bearing Shield	30121900
52	Bolt M8 x 45mm	02941000
53	Bonnet Pivot Boss	31306100
54	PGC Belt Tension Adjust. Trunnion	183003800
55	Belt A49	228001200
56	Washer 9/16”	08827800
57	PGC Outer Shaft Locking Plate	307191500
58	Nylon Washer	088002300
59	PGC Roller	327010600
60	Bearing	10811600
61	Sweeper Roller Tubular Spacer Z/P	174003600
62	Roller Internal Shaft	183010000
63	PGC Inner Shaft Locking Plate	307191400
63a	Roller Scraper Cable	528004301
64	Jockey Pulley	20811500
65	Bolt M8 x 25mm	02826000
66	Sweeper Flap Plate (from serial no. 0103…)	327012100
67	Capped Lock Washer	01823400
68	PGC Belt Tension Adjust. Rod	313003500

A,D & K SERIES
POWERED GRASS COLLECTOR NET

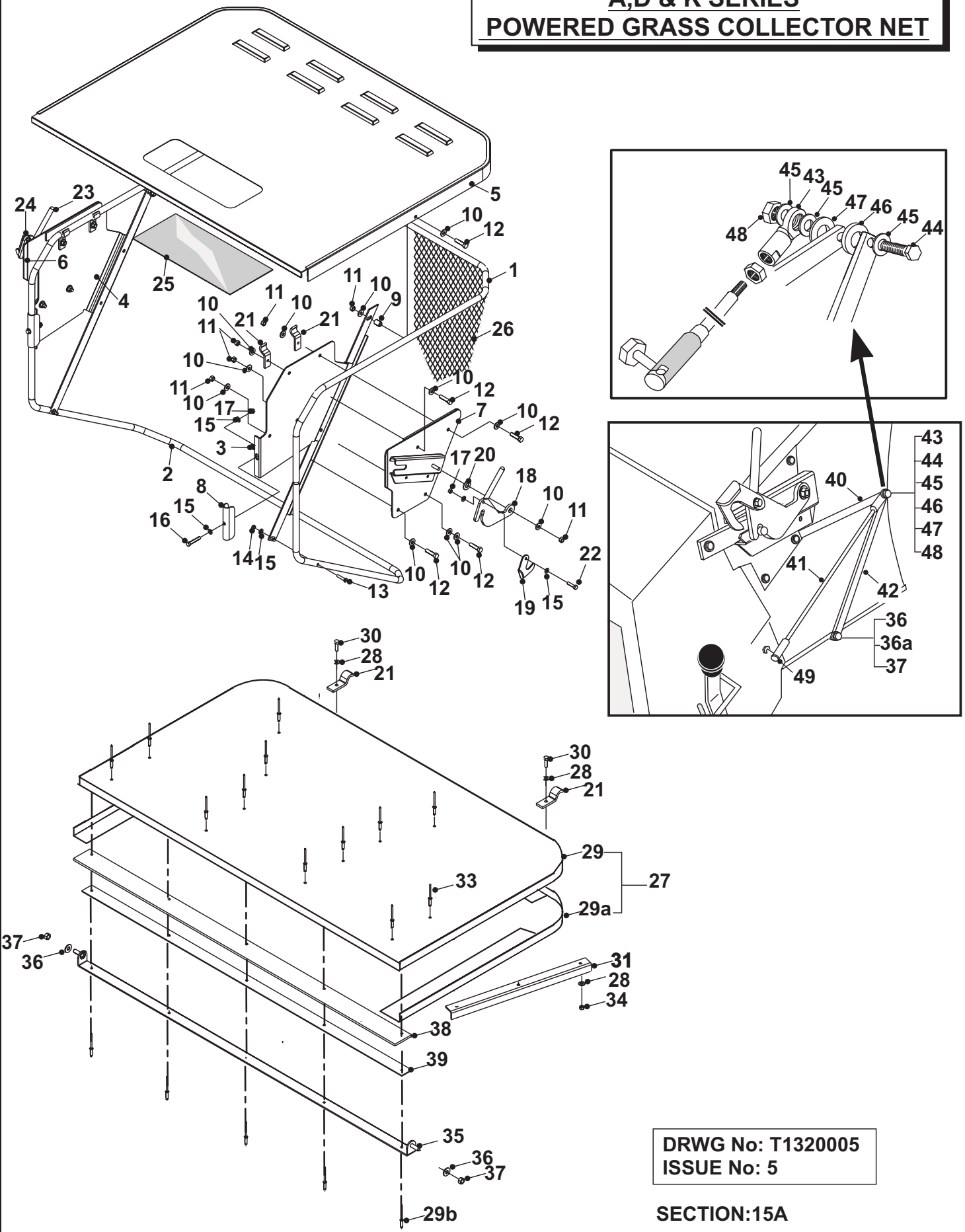

DRWG No: T1320005
ISSUE No: 5

SECTION:15A

	PART DESCRIPTION	PART NUMBER
1	20/50 Upper Bag Frame	178968500
2	20/50 PGC Lower Frame Tube 2000	178966600
3	2003 2050 PGC LH Goal Post	307193400
4	2003 2050 PGC RH Goal Post	307193500
5	Plastic Bag Lid	148015500
6	2003 2050 RH Bag Ear Welded	328956500
7	2003 2050 LH Bag Ear Welded	328956400
8	PGC Bag Clamping Plate	30149600
9	Tx Rear Bolt Spacer	18320600
10	M8 Washer	08819501
11	M8 Nyloc Nut	04850600
12	Bolt M8 x 25	028002900
13	Allen Screw M6 x 30mm	028000100
14	Nut M6 Nyloc	04920500
15	M6 Washer	088000300
16	M6 x 40 Hex Head Bolt Bright Zinc Plate	01803600
17	Nut M6 Nyloc	04920500
18	Sweeper Lock Handle L/H	27707701
19	L/H PGC Lever Lock	30149800
20	Nylon Washer	14850500
21	Bag Floor Clamp	301008400
22	Bolt M6 x 25 Plated	028002900
23	Sweeper Lock Handle R/H	27707801
24	R/H PGC Lever Lock	30150300
25	Quick Release Ball Joint c/w Ball Section	183010200
26	PGC Sweeper Collector Net 2003	388000202
27	Galvanised Floor & Trim	302015500
28	Spacer 7mm x 3/8”	31302900
29	Bolt M8 x 20mm	02825900
30	Bolt M6 x 20mm	018000300
31	Floor Support Bracket	302015600
32	Pivot Spacer 13mm	332112400
33	Rivet 4.8 x 16mm Alloy Pop	12860100
34	M10 Nyloc Nut	04886100
35	Washer 10.8 i.d. x 20.7 i.d x 2mm Thk	088002400
36	M10 Locknut	04872100
37	Bolt M8 x 45	02941000
38	PGC Rubber	148004400
39	PGC Rubber Fixing Strip	301045400
40	20/50 PGC Tipping Link Rod Upper	301122800
41	PGC Adjuster Link Rod	183010402

42	20/50 PGC Tipping Link Arm Lower	301123000
43	10mm Rod End	10872600
44	M10 x 45 Bolt BZP	018005500
45	Washer 10.8 i.d. x 20.7 i.d. x 2mm	088002400
46	Pivot Spacer	31306100
47	Bolt M5 x 20mm	018000100
48	M5 Nyloc Nut	04885900
49	Washer M12 x 24 x 1.6mm	08803600

A20/50 SERIES
POWERED GRASS
COLLECTOR
NET 2004

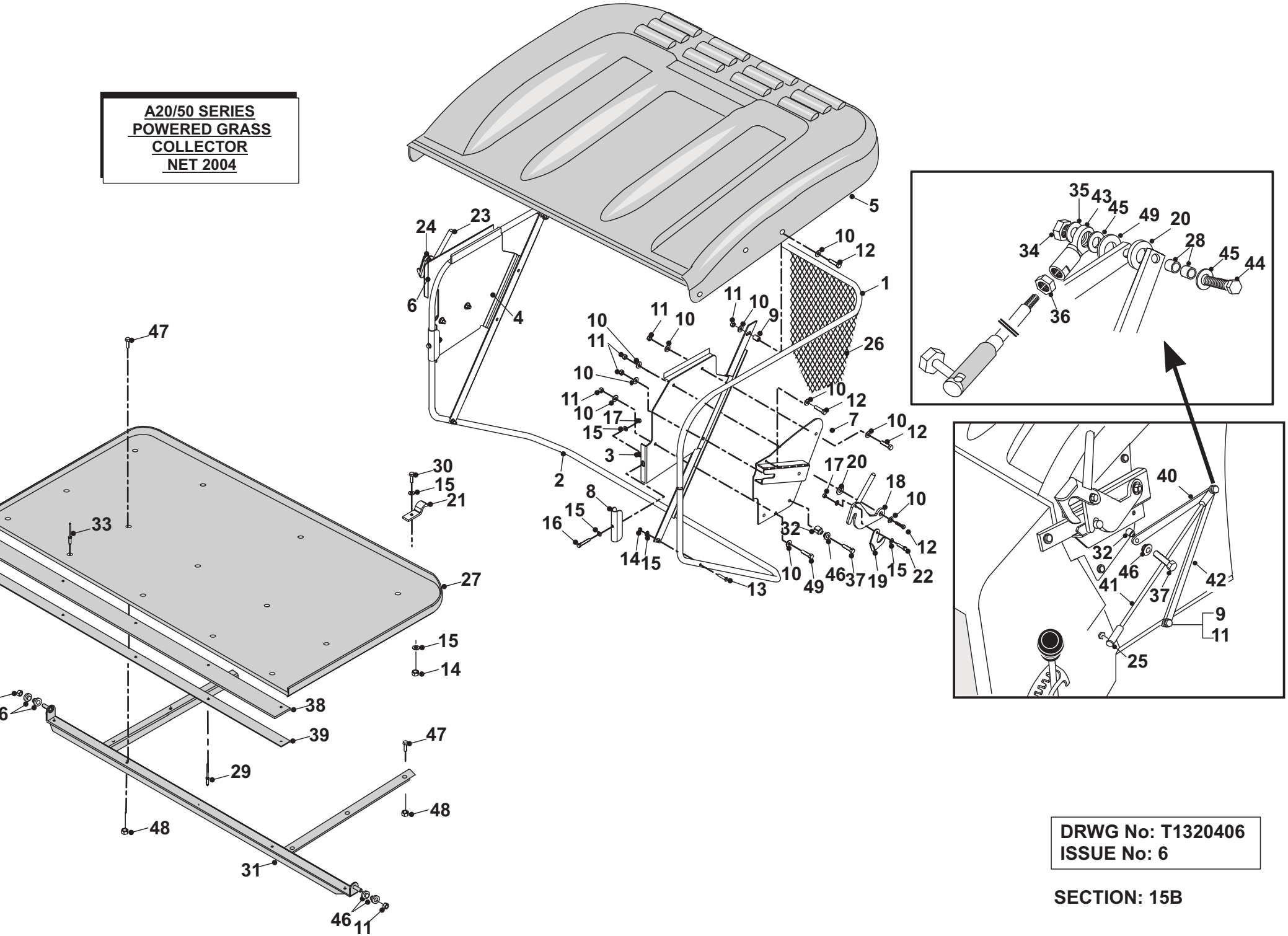

DRWG No: T1320406
ISSUE No: 6

SECTION: 15B

	PART DESCRIPTION	PART NUMBER
1	Upper Bag Frame	178968500
2	PGC Lower Frame Tube 2000	178966600
3	2003 PGC LH Goal Post	307193400
4	2003 PGC RH Goal Post	307193500
5	Plastic Bag Lid	148015500
6	2003 RH Bag Ear Welded	328956500
7	2003 LH Bag Ear Welded	328956400
8	PGC Bag Clamping Plate	30149600
9	Tx Rear Bolt Spacer	18320600
10	M8 Washer	08819500
11	M8 Nyloc Nut	04920100
12	Bolt M8 x 25	028002900
13	Allen Screw M6 x 30mm	028000100
14	Nut M6 Nyloc	04920500
15	M6 Washer	08827800
16	M6 x 40 Hex Head Bolt Bright Zinc Plate	018003600
17	Nut M6 Nyloc	04920500
18	Sweeper Lock Handle L/H	27707701
19	L/H PGC Lever Lock	30149800
20	Nylon Washer	14850500
21	Bag Floor Clamp	301008400
22	Bolt M6 x 25 Plated	028002900
23	Sweeper Lock Handle R/H	27707801
24	R/H PGC Lever Lock	30150300
25	Quick Release Ball Joint c/w Ball Section	183010200
26	PGC Sweeper Collector Net 2003	388000202
27	Galvanised Floor & Trim	302015500
28	Spacer 7mm x 3/8”	31302900
29	Bolt M8 x 20mm	02825900
30	Bolt M6 x 20mm	018000300
31	Floor Support Bracket	302015600
32	Pivot Spacer 13mm	332112400
33	Rivet 4.8 x 16mm Alloy Pop	12860100
34	M10 Nyloc Nut	04886100
35	Washer 10.8 i.d. x 20.7 i.d x 2mm Thk	088002400
36	M10 Locknut	04872100
37	Bolt M8 x 45	02941000
38	PGC Rubber	148004400
39	PGC Rubber Fixing Strip	301045400
40	PGC Tipping Link Rod Upper	301122800
41	PGC Adjuster Link Rod	183010402

42	PGC Tipping Link Arm Lower	301123000
43	10mm Rod End	10872600
44	M10 x 45 Bolt BZP	018005500
45	Washer 10.8 i.d. x 20.7 i.d. x 2mm	088002400
46	Pivot Spacer	31306100
47	Bolt M5 x 20mm	018000100
48	M5 Nyloc Nut	04885900
49	Washer M12 x 24 x 1.6mm	088003600

A20/50TRACTOR DECALS (Page 1.)

1.

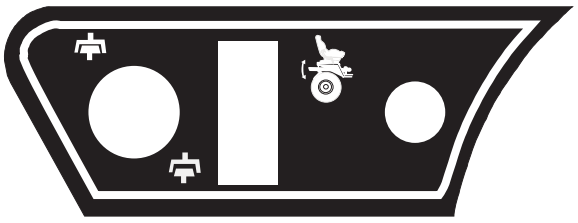

2.

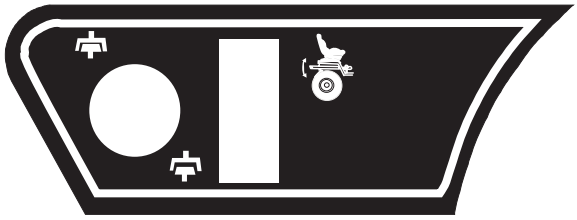

3.

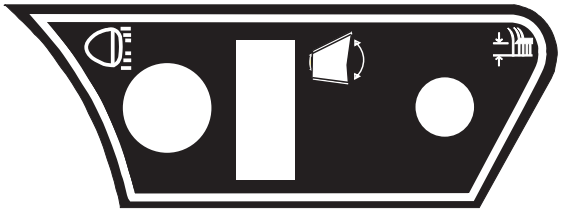

4.

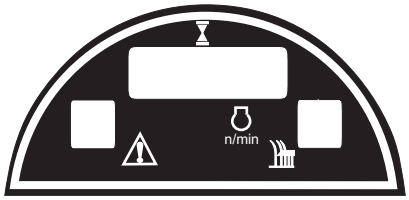

5.

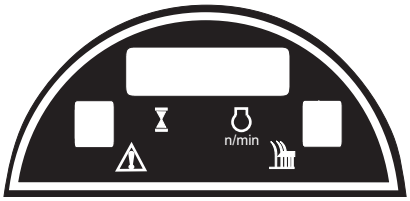

6.

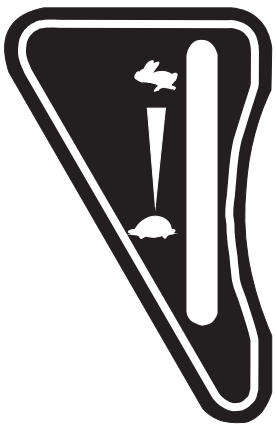

7.

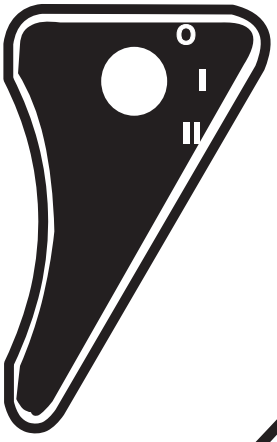

9.

10.

11.

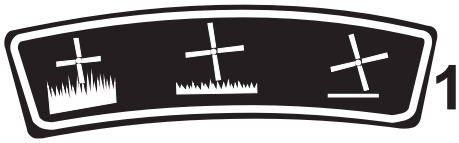

8.

A20/50 TRACTOR DECALS (Page 2)

12.

13.

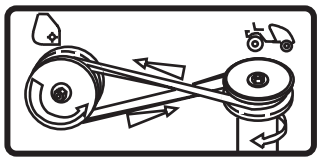

14.

15.

16.

17.

L/H

18.

R/H

19.

20.

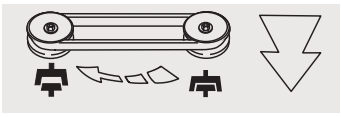

21.

22.

23.

A20-50 TRACTOR
DECALS
PARTS LIST

	PART DESCRIPTION	PART NUMBER
1.	Deck Engage Decal 2003	358026400
2.	Deck Engage / Choke Decal 2003	358028800
3.	Deck / Net / Height Consol Decal	358031500
4.	Decal Dash Display 2003 (Version 1.)	358027100 use 358032900
5.	Decal Dash Display 2003 (Version 2.)	358032900
6.	Throttle Dash Decal 2003	358026900
7.	Dash Ignition Decal 2003	358026600
8.	Decal `Read Safety Instructions'	359506300
9.	IBS Decal 2003	35931301
10.	Mulcher Decal 2003	35945901
11.	Sweeper Height Decal 2003	35937601
12.	Decal 105 Decibel – Nov 91	359497101
13.	Sweeper Belt Decal (Symbols Only)	35891200
14.	Decal `C' Badge Bonnet	35929300
15.	PTO Danger Decal	35809500
16.	Deck Danger Decal	35803300
17	Decal `A20-50' L/H	358002000
18	Decal `A20-50' R/H	358002100
19	Decal 50" IBS Deck – April 04 Decal 50" Mulcher – April 04 Decal 42" HGM – April 04	358010102 358009702 358009602
20.	Deck Belt Release Decal	35914600
21.	`CE' Decal	35912000
22.	Handbrake Handle Badge	359505100
23	Pegged Badge Countax (Countax Yellow)	35932500

A20/50 TRACTOR
42" HIGH GRASS MULCHER DECK

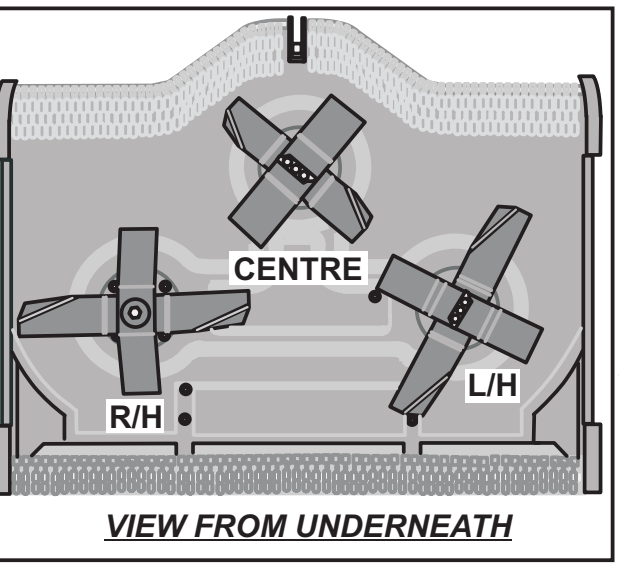

VIEW FROM UNDERNEATH

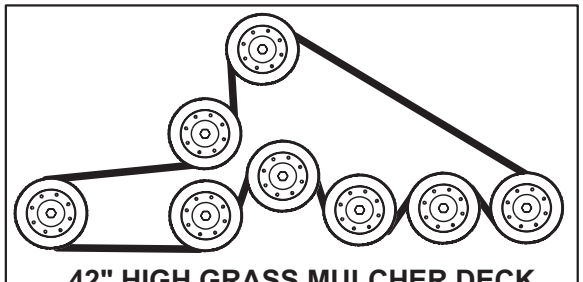

42" HIGH GRASS MULCHER DECK DRIVE BELT PATH

A20-50 TRACTOR
42" HIGH GRASS MULCHER DECK PARTS LIST

	PART DESCRIPTION	PART NUMBER
1	Deck Lid Cover	149544900
2	Washer 40 x 10mm	08824600
3	Deck Pulley Internal	20869600
4	Bolt M10 x 30mm	018002100
5	Key ¼" sq x 1.1/4"	09853400
6	M8 Washer	08819501
7	Spacer Jockey Wheel	18831600
8	M8 Form B Washer	088001800
9	Bolt M8 x 50mm	018001800
10	M8 Nut Nyloc	04850600
11	Platform Bearing Housing	405005000
12	Support / Idler Pulley Boss	183021600
13	Idler Pulley 5"	20869502
14	Bearing Plate Support (Tube Spacer)	183021900
15	Support / Jockey Pulley Pivot	183021800
16	Support / Jockey Pulley Spacer	183021700
17	Jockey Plate	327176700
18	Drive Bearing Support Plate	301130100
19	Central Drive Shaft 113mm	183012400
20	Deck Push Rod Pin	31338200
21	M8 x 90mm Hex Hd Bolt BZP	018003400
22	Jockey Cap Boss	31351100
23	Bolt M8 x 45mm	02941000
24	Roofing Bolt M8 x 20mm	018001500
25	Belt Guard	327171200
26	Deck Pulley Internal	20869600
27	42" HGM Deck Welded	327176601
28	Short Shaft Bearing Housing	40503604
29	10mm Starlock Washer	088002100
30	L/H HGM Blade (AC)	16000500
31	L/H "V" Blade (AC)	16000300
32	R/H Blade (CW)	16000400
33	R/H "V" Blade (CW)	16000100
34	GCD 1" Link Chain Small	238000300
35	Deck Tension Bar	29202400
36	M8 x 35mm Bolt	01935700
37	Dome Washer 1.3/4" x 3/8" x 1/8" Dome	08819900
38	Chain Rod Support Spacer	183022300

SEPTEMBER 2004

A20/50 TRACTOR
42" HIGH GRASS MULCHER DECK PARTS LIST

39	Chain Rod 5/16" x 522mm	301123500
40	Front Chain Rod Spacer	183022700
41	Chain Plate Large	307018900
42	Chain Plate Small	307019000
43	Cap Screw M8 x 20cs	028001900
44	Bolt M8 x 40 Bright Zinc Plate Bolt	018003200
45	Rear Rubber Flap Fixing Strip	307020100
46	Rear Rubber Flap	148008400
47a	Universal Deck Hanging Bracket L/H	307186800
47b	Universal Deck Hanging Bracket R/H	307186900
48	Pop Rivet (Steel) 4.8 x 16	12860100
49	Belt BB100 – 42" HGM	229503500
50	Locking Collar Deck Spring Stop	31320400
51	Chain Rod 5/16" x 233mm	301123300
52	Chain Rod 5/16" x 279mm	301123400
53	Chain Rod Spacer	183011900
54	Deck Belt Tension Spring	25906200
55	Screw 8mm x 25mm	01916900
56	M8 Shakeproof Washer	088000800
57	HGM Blade Spacer	271116600
58	Locking Tab	27111200
59	Belt B52 Dayco	229503200
60	Rue Clip	11836700