A20/50 TRACTOR PARTS LIST INDEX

1. FRONT AXLE ASSEMBLY

2A. TWIN EXHAUST(B&S ENGINE) ASSEMBLY

2B. TWIN EXHAUST(HONDA ENGINE) ASSEMBLY

3. TWIN CYLINDER ENGINE(B&S) ASSEMBLY

4A. MK-1 BONNET ASSEMBLY

4B. MK-2 BONNET & TWIN CYLINDER HONDA ENGINE ASSY

5. CONSOL ASSEMBLY

6. SEAT & REAR BODY ASSEMBLY

7. FRONT ACTUATOR ASSEMBLY

8. P.T.O. TRANSMISSION ASSEMBLY

8A. P.T.O. TRANSMISSION ASSEMBLY - HAND CLUTCH / BRAKE CONTROL

9. TUFF TORQ HYDROSTATIC ASSEMBLY

9A. TUFF TORQ HYDROSTATIC ASSEMBLY - HAND CLUTCH / BRAKE CONTROL

10. ELECTRICAL PARTS

11. REAR DISCHARGE DECK

12. MULCHER DECK

13. RUNNING BOARD & REAR BODY ASSEMBLY

13A. RUNNING BOARD & REAR BODY ASSEMBLY - HAND CLUTCH / BRAKE CONTROL

13B. A20/50H RUNNING BOARD & REAR BODY ASSEMBLY - HAND CLUTCH / BRAKE CONTROL

14. POWERED GRASS COLLECTOR

15. POWERED GRASS COLLECTOR NET

ACCESSORIES: 42" HIGH GRASS MULCHER

A 20/50 FRONT AXLE ASSEMBLY

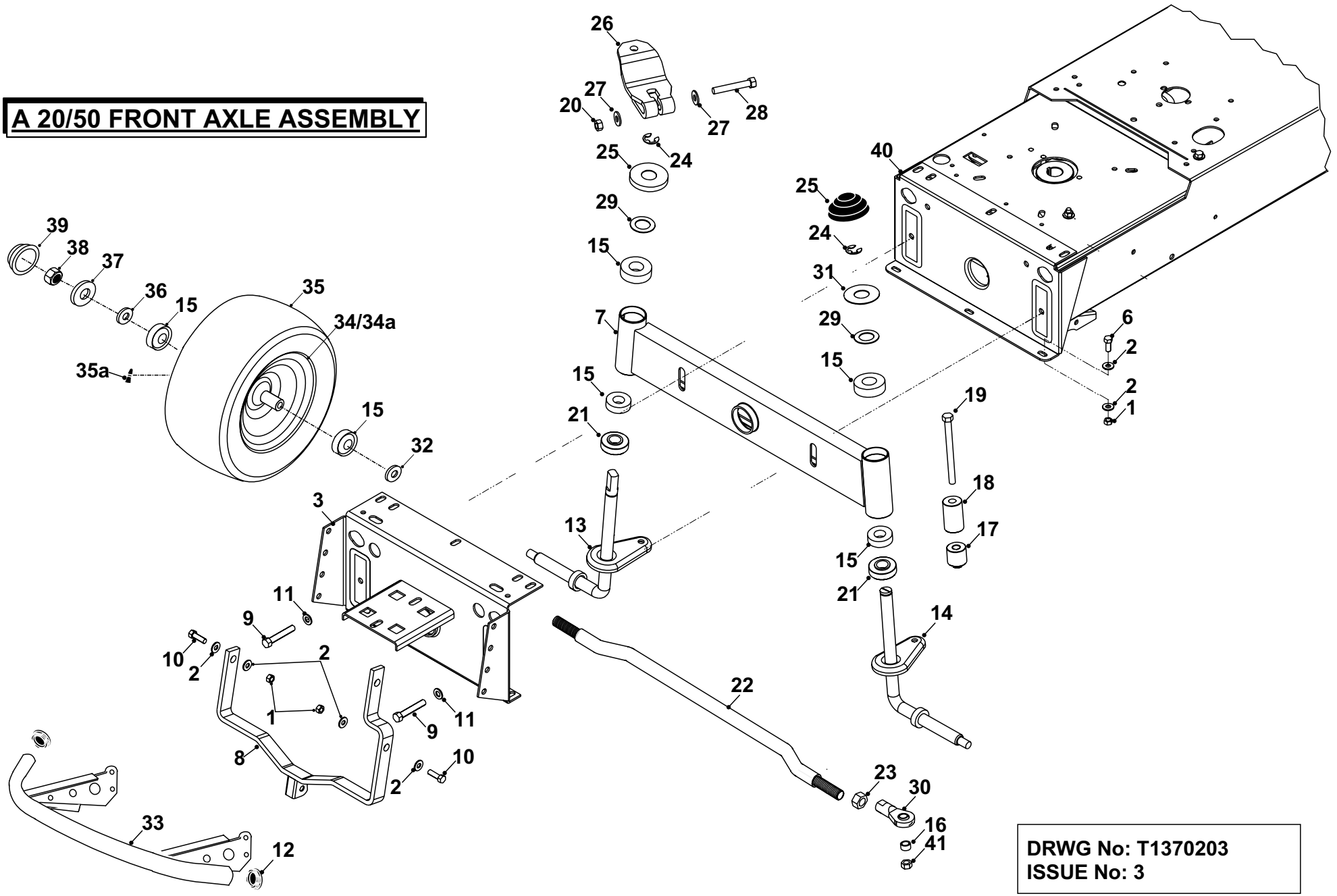

DRWG No: T1370203
ISSUE No: 3

SECTION 1.

A20/50 TRACTOR
FRONT AXLE ASSEMBLY PARTS LIST

	PART DESCRIPTION	PART NUMBER
1	Nyloc Nut 5/16” UNF	04827500
2	Washer 5/16” T4 ZP	08819700
3	Front Axle Holder	27115500
4	Side Panel Bracket L.H.	302006200
5	Side Panel Bracket R.H.	302006300
6	M/Screw 5/16” x 3/4”	02827600
7	Axle Beam	327014700
8	Deck Tension Cradle	327009800
9	Bolt 3/8” x 2.1/4” UNF	01821500
10	M/Screw 5/16” x 1”	02819600
11	Washer T3 HP	08820100
12	Bullbar Plastic End Cap	148014400
13	Stub Axle R.H.	327178200
14	Stub Axle L.H.	327178300
15	Bearing 40mm x 3/4” bore	10802200
16	Steering Link Rod End Spacer	183012800
17	Steering Link Short Spacer	183012700
18	Steering Link Support Spacer	183012600
19	Bolt M12 x 120mm	018002200
20	Nyloc Nut 5/16” UNF	04827500
21	Stub Axle Spacer	183006200
22	Track Rod	183018200
23	Nut M12	049381200
24	Circlip External 19mm	07921200
25	Hub Cap Axle Beam	27113900
26	Steering Arm	327177000
27	Washer 5/16” T4	08819700
28	Bolt 5/16” x 2” UNF	01820900
29	Galvanised Washer 32mm x 19.5mm	30127900
30	Rod End Joint M12	10872800
31	Galvanised Washer 46mm x 13mm	30128100
32	Washer 3/4” T3 LP	08822900
33	Stainless Steel Bullbar	327028000
34	Front Wheel Complete	198001400
34a	Wheel Rim	198001900
35	Front Tyre	198000600
35a	Valve	14889200
36	Washer 1” x 1/2” ID	08822500
37	Washer 46mm x 13mm ID	30128100
38	Nyloc Nut 1/2” UNF	04822400
39	Hub Cap	14811800
40	Chassis	327006301
41	Nut M12	049381100

A20/50 TWIN EXHAUST ASSEMBLY
BRIGGS & STRATTON ENGINE

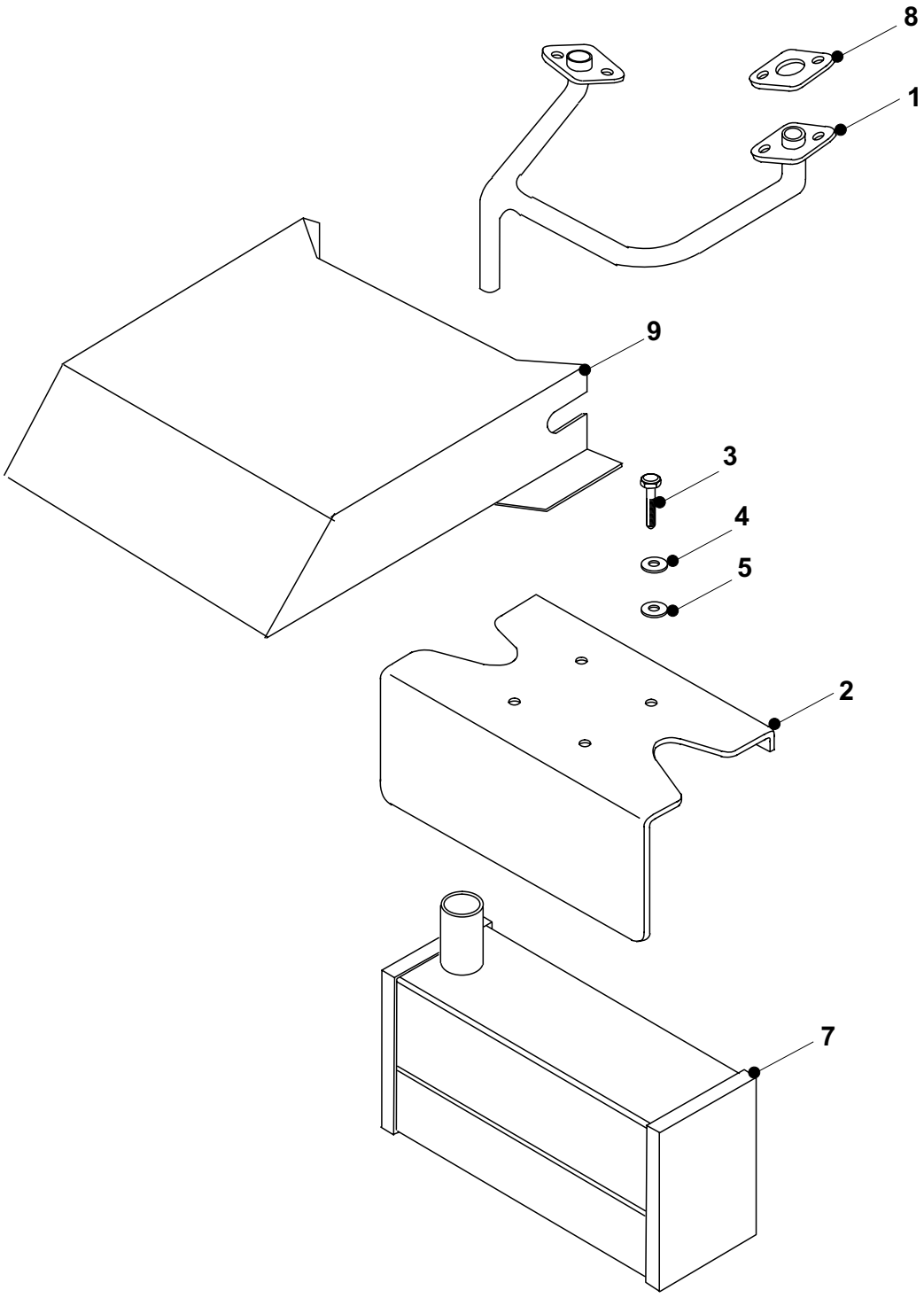

DRWG No : T130A0101
ISSUE No : 1

SECTION 2A.

A20/50 TRACTOR
EXHAUST ASSEMBLY PARTS LIST

	PART DESCRIPTION	PART NUMBER
1	Twin Exhaust Manifold	327172300
2	Exhaust Cover Galvanised	30122950
3	Bolt 1/4" UNC x 1 1/4"	01850800
4	Washer 1/4" Shakeproof	08824200
5	Washer 1/4" T3 LP	08827800
6	Exhaust Paste (not illustrated)	52923800
7	Exhaust Box	327007301
8	Exhaust Gaskets	(Supplied By Briggs & Stratton)
9	Exhaust Heat Shield	52100000

A20/50H TWIN EXHAUST ASSEMBLY
HONDA GXV620 ENGINE

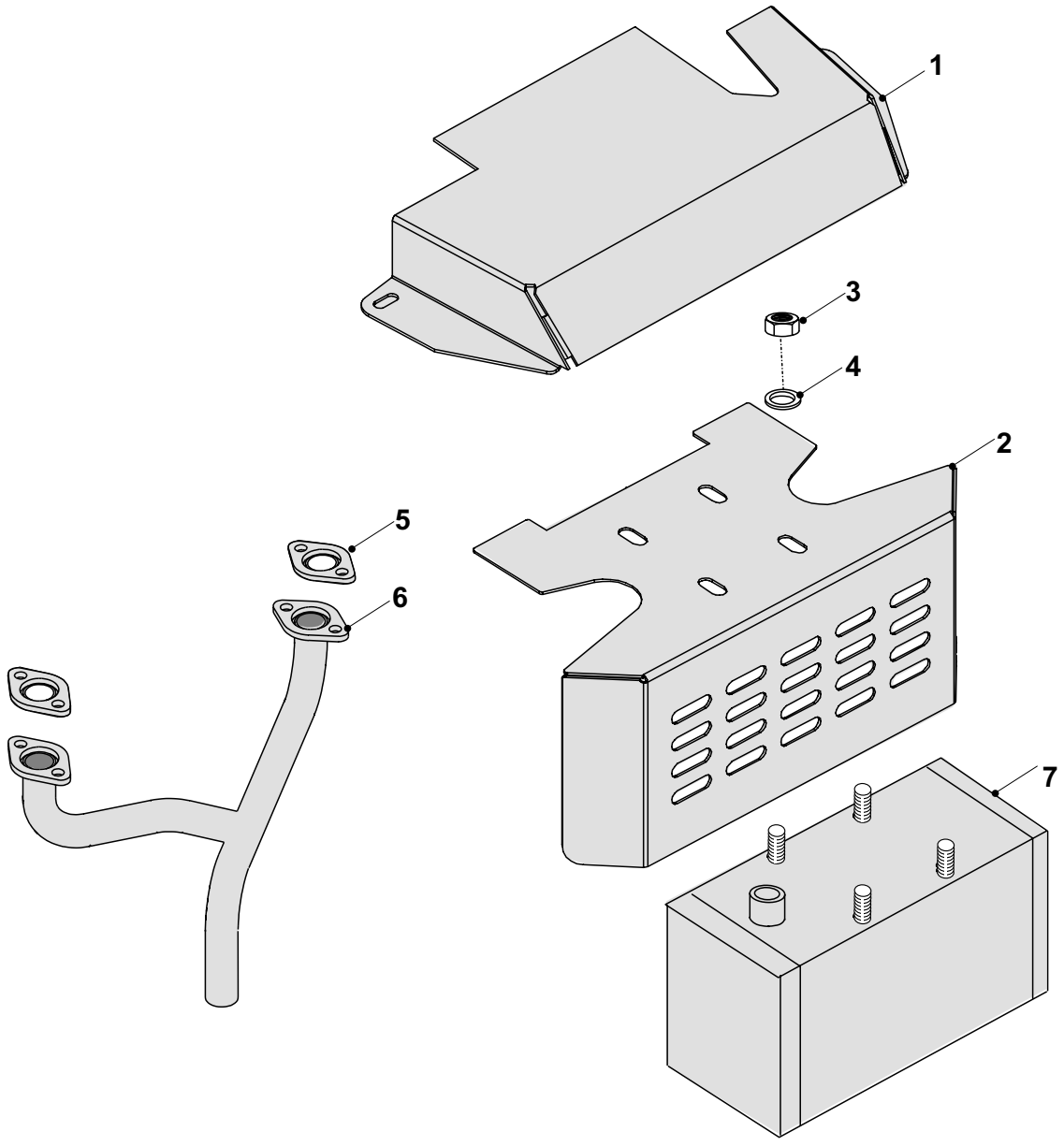

DRWG No : T130B0101
ISSUE No : 1

SECTION 2B.

A20/50H TRACTOR
EXHAUST ASSEMBLY PARTS LIST

	PART DESCRIPTION	PART NUMBER
1	Exhaust Heat Shield Zintec 18 & 20HP	301138000
2	Exhaust Cover	307184500
3	Nut M8	04852100
4	Washer 5/16” x 7/8” LP	08832100
5	Exhaust Gasket	Supplied by Honda
6	Exhaust Pipe 18 & 20HP	327026400
7	Exhaust Box	327007301
8	Exhaust Paste (not illustrated)	52923800

A20/50 TWIN CYLINDER
BRIGGS & STRATTON ENGINE ASSY

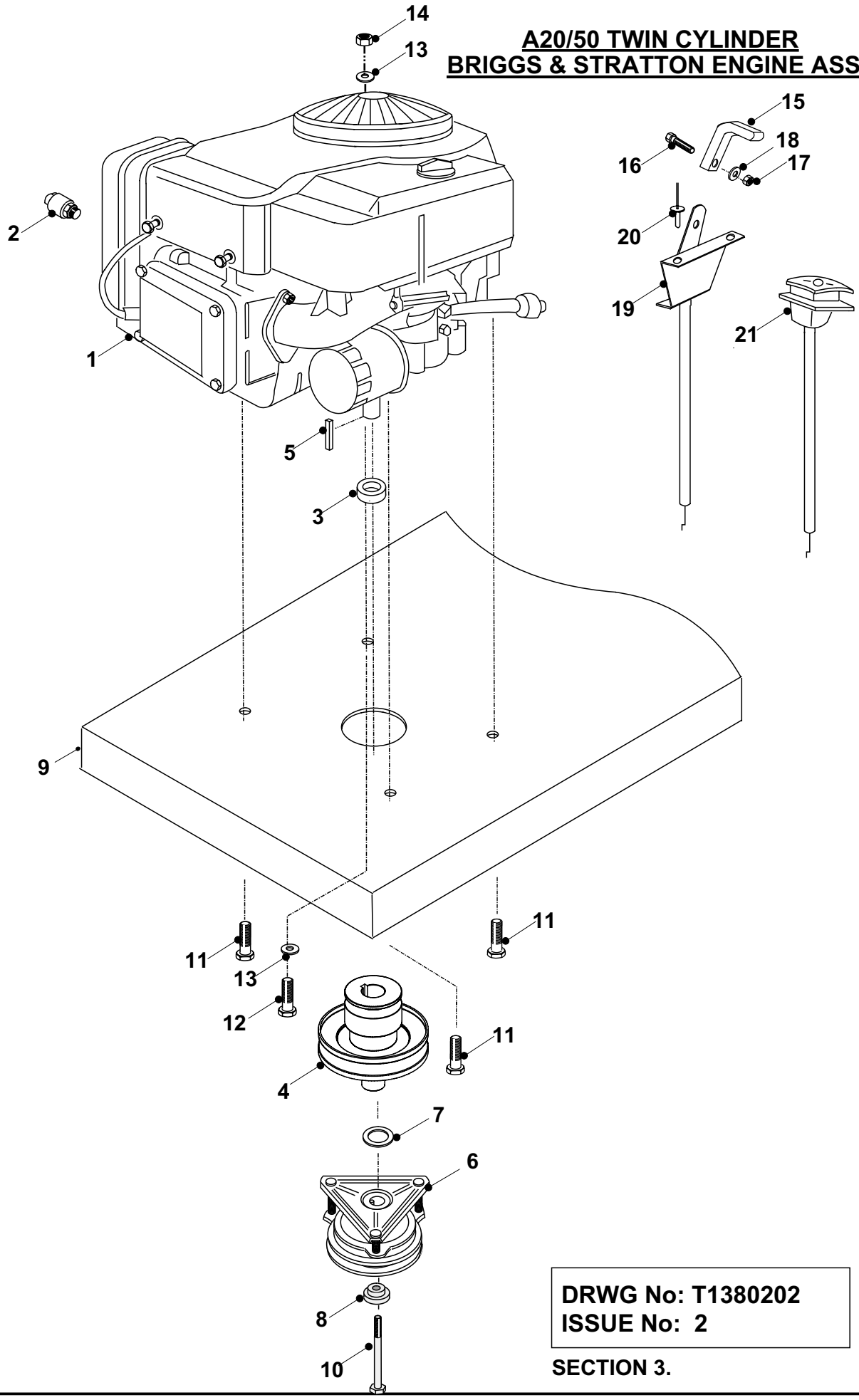

DRWG No: T1380202
ISSUE No: 2

SECTION 3.

A20/50 TRACTOR
ENGINE ANCILLARY PARTS LIST

	PART DESCRIPTION	PART NUMBER
1	Engine - Not Available From Countax	N/A
2	Oil Drain Valve	52851200
3	Engine Pulley Spacer	31854000
4	Engine Pulley	327006500
5	Key 1/4” Square x 1.1/4”	09853400
6	Warner Electric Clutch	44815200
7	Clutch Spacer (clutch kit only)	31330300
8	Pulley Cap	183016800
9	Chassis	327006301
10	Bolt 7/16” UNF x 6”	01853300
11	Bolt 3/8” UNC x 1.1/4”	01848700
12	Bolt 5/16” UNF x 1.1/2”	01820700
13	Washer 5/16” T4 HP	08819700
14	Nut 5/16” UNF Nyloc	04826400
15	Throttle Control Knob	14810400
16	Screw M4 x 10mm	02847800
17	Nut M4 Nyloc	04826400
18	Washer 4mm	08826200
19	Throttle Control	528004900
20	Rivet 3.2mm x 10mm	12863100
21	Choke Control	RCL29005800

A20/50 MK-1
BONNET ASSEMBLY

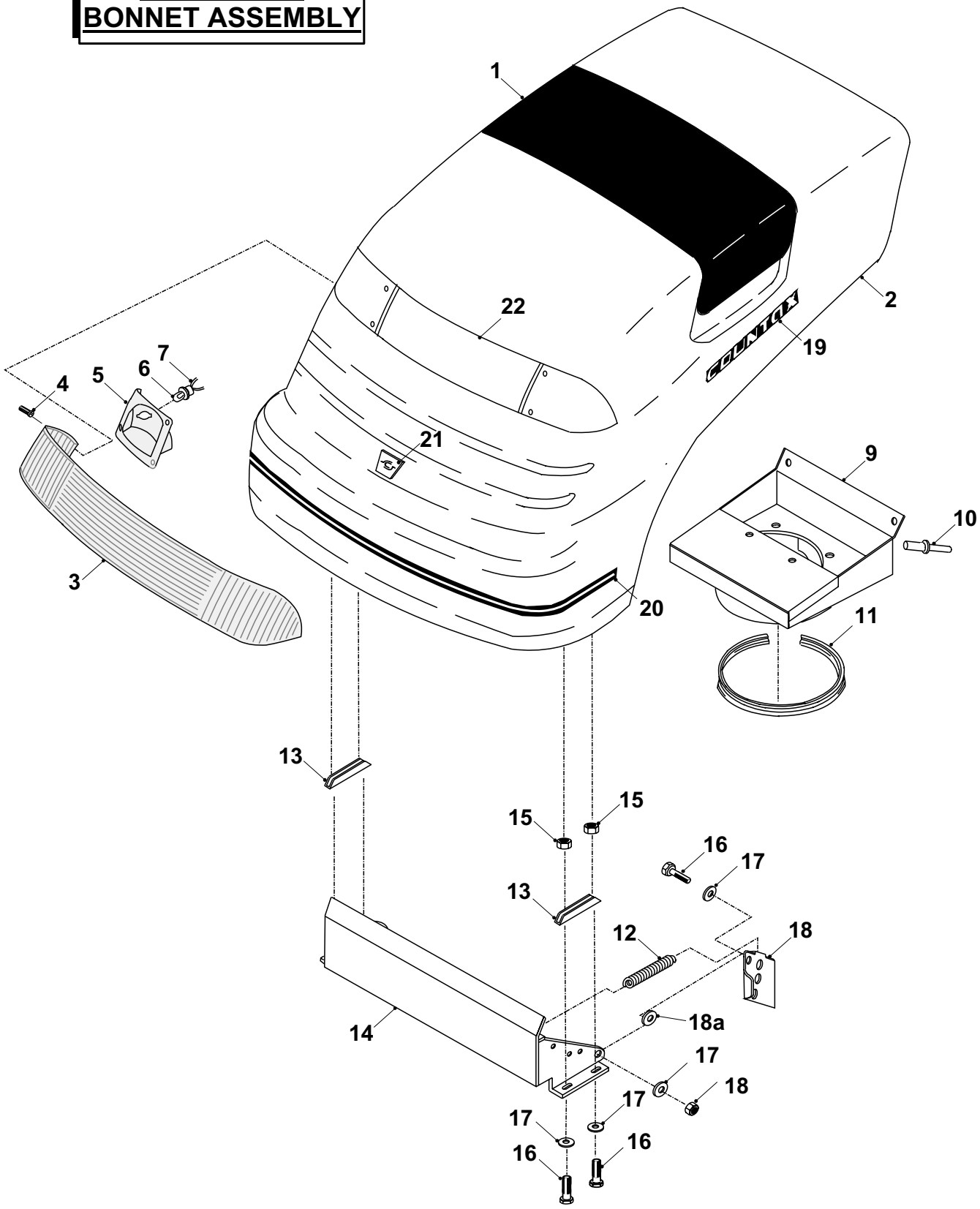

DRWG No: T1299901
ISSUE No: 1

SECTION 4A.

A20/50 MK-1 TRACTOR
BONNET ASSEMBLY PARTS LIST

	PART DESCRIPTION	PART NUMBER
1	Bonnet Insert	14929100
2	Bonnet	148003800
	Complete Bonnet A20/50	405004900
3	Headlight Lens	14932800
4	No. 6 x 8mm S/T Screw	02913100
5	Headlamp Reflector (R/H)	14932700
	Headlamp Reflector (L/H)	14932600
6	Bulb 12V 21W	44816200
7	Bulb Holder	44816100
8	Light Loom 3894 (not Illustrated)	44813900
9	A 20/50 Bonnet Cowl	327013400
10	Pop Rivet 4.8mm x 16mm	12860100
11	Edge Trim A20/50 (810cm)	14896100
12	Bonnet Spring	25805200
13	Bonnet Hinge Back Plate	27116500
14	Bonnet Hinge	32730100
15	5/16” Nyloc Nut	04827500
16	Bolt 5/16” UNF x 1”	02819600
17	Washer 5/16” T4	08819700
18	Bonnet Hinge Stop (LH)	27103300
	Bonnet Hinge Stop (RH)	27113600
18a	Bonnet Pivot Boss (not Illustrated)	31306100
19	“Countax” Badge (with Pins)	35932500
20	Bumper Stripe	35931100
21	Countax Badge	35929300
22	Headlight Lens Decal	35931200
23	A20/50 Drive Belt Decal (not illustrated – Decal location under bonnet)	358009801

A20/50 TWIN CYLINDER HONDA GXV 620 & BONNET ASSEMBLY

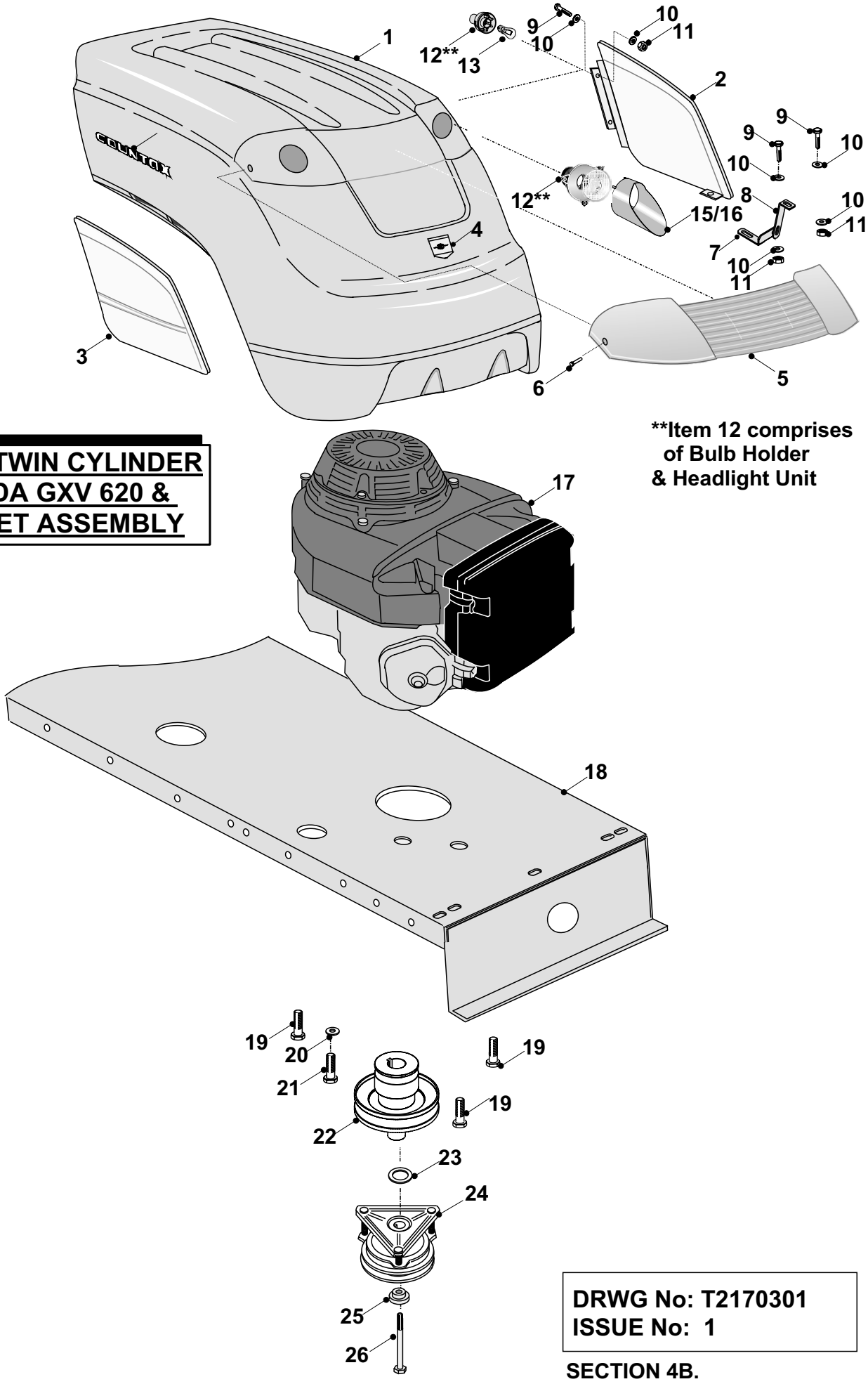

**Item 12 comprises of Bulb Holder & Headlight Unit

DRWG No: T2170301
ISSUE No: 1

SECTION 4B.

A20/50 MK-2 BONNET
& TWIN CYLINDER HONDA GXV 620 ENGINE ASSY
PARTS LIST

	PART DESCRIPTION	PART NUMBER
1	Bonnet	405008100
2	Engine Side Panel L/H	148014100
3	Engine Side Panel R/H	148014200
4	Countax `C' Badge	35929300
5	Bonnet Headlight Lens	148013400
6	Screw M4 x 16mm Countersunk Socket Head	018005100
7	Side Panel Base Bracket L/H Side Panel Base Bracket R/H	301137200 301137300
8	Side Panel Top Bracket L/H Side Panel Top Bracket R/H	301137600 301137700
9	M/Screw M8 x 20mm	028000200
10	Washer M6	088000300
11	Nut Nyloc M6	048001000
12	Headlight Unit - Hella	448008400
13	Headlight bulb 21w - Hella	448008500
15	Headlight Can L/H	148013500
16	Headlight Can R/H	148013600
17	Honda Engine GVX 620 (18 & 20HP)	Not Available From Countax
18	Chassis	327006301
19	Bolt 3/8" UNC x 1.1/4"	01848700
20	Washer 5/16" T4 HP	08819700
21	Bolt 5/16" UNF x 1.1/2"	01820700
22	Engine Pulley	327006500
23	Clutch Spacer (clutch kit only)	31330300
24	Warner Electric clutch	44815200
25	Pulley Cap	183016800
26	Bolt 7/16" UNF x 6"	01853300

A20/50 CONSOL ASSEMBLY

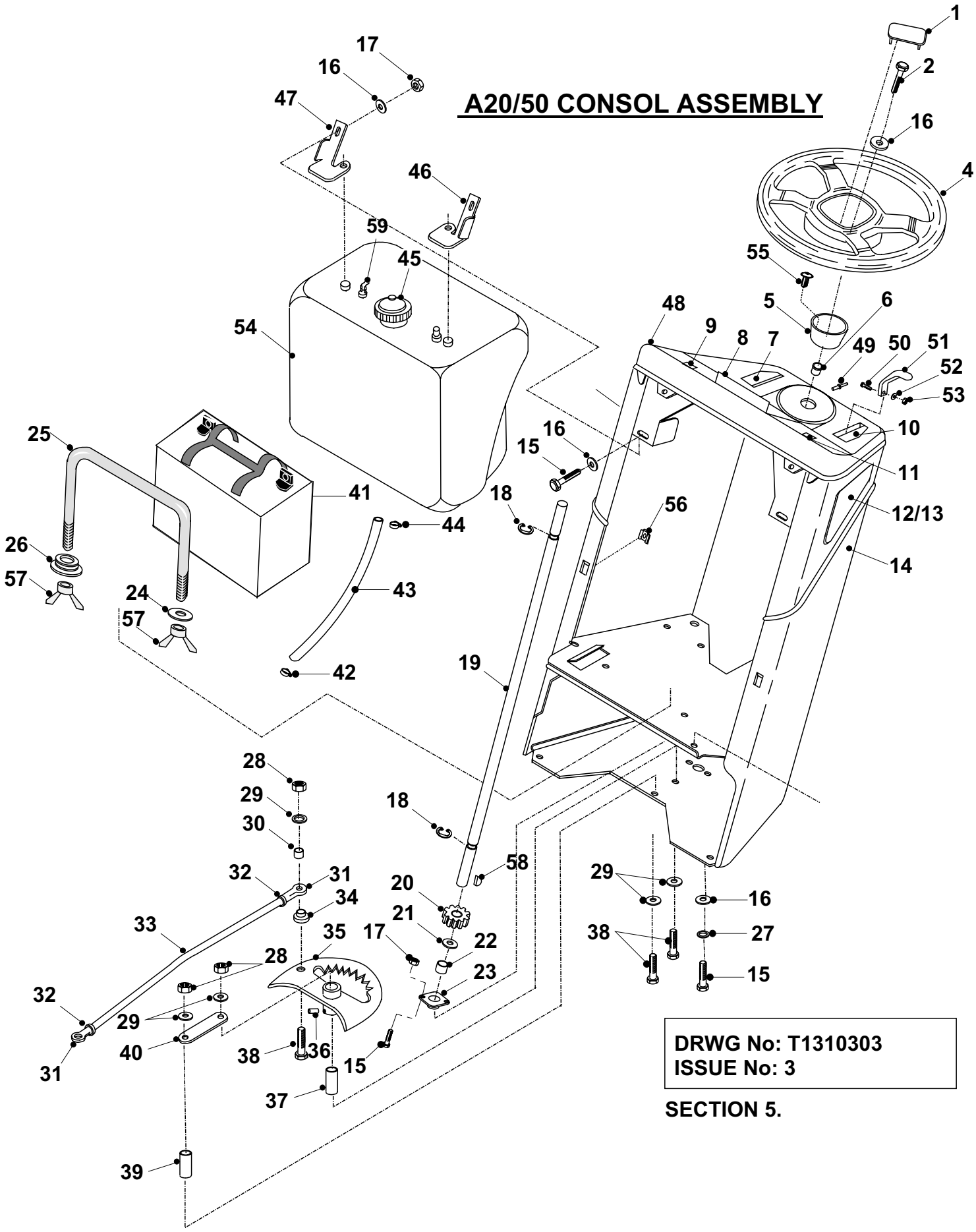

DRWG No: T1310303
ISSUE No: 3

SECTION 5.

A20/50 TRACTOR
CONSOL ASSEMBLY PARTS LIST

	PART DESCRIPTION	PART NUMBER
1	Steering Wheel Cap	14938700
2	Bolt 5/16” UNF X 1”	02819600
4	Steering Wheel	14928200
5	Steering Wheel Shroud	14933600
6	Column Upper Bush	14801800
7	Ignition Decal	358026600
8	Dashboard Display Decal	358032900
9	Deck / Net / Headlights Decal	358031500
10	Throttle Decal	358026900
11	Deck Engage / Choke Decal	358028800
12	Rubber Knee Pad R/H	14859200
13	Rubber Knee Pad L/H	14859300
14	Consol	271004100
15	Bolt 5/16” UNF X 3/4”	02827600
16	Washer 5/16” T4 HP	08819700
17	Nyloc Nut 5/16” UNF	04827500
18	E-Clip 5/8”	07823400
19	Steering Column	31328400
20	Steering Gear	213112100
21	Washer 5/8” T3 LP	08822700
22	Steering Rod Spacer	18401500
23	Column Lower Bearing	10801700
24	Washer !/4” T4 HP	08874300
25	Battery Clamp	313008500
26	Pivot Spacer	31306103
27	Washer 5/16” Shakeproof	08855100
28	Nyloc Nut 3/8” UNF	04820200
29	Washer 3/8” T3 HP	08820100
30	Spacer 3/8” Internal x 7mm	31302900
31	Track Rod End M12	10872800
32	Locknut M12	049381200
33	Steering Link Rod	313007400
34	Rose Joint Shoulder Boss - Short	31339600
35	19 tooth Steering Quadrant	301134100
36	Grease Nipple 5/16” UNF	11808600
37	Steering Rack Pivot	31337400

A20/50 TRACTOR
CONSOL ASSEMBLY PARTS LIST

	PART DESCRIPTION	PART NUMBER
38	Bolt 3/8” UNF X 2 1/2”	01821600
39	Steering Support Boss	31337500
40	Steering Link Plate	27102400
41	Battery 12v (Dry Charged)	458141300
42	Spring Type Hose Clip	11867100
43	Fuel Feed Pipe - 40cm	14803200
44	Jubilee Clip	11856900
45	Fuel Tank Cap	52803100
46	Fuel Tank Bracket R/H	27115800
47	Fuel Tank Bracket L/H	27115900
48	Consol Top	148012800
49	Rivet 4.8mm X 10 mm	12824400
50	Screw M4 x 12mm Pozi Pan	02826300
51	Control Lever Knob	14810400
52	Washer M4	08826200
53	Nyloc Nut M4	04826400
54	Fuel Tank	148015400
55	No. 6 x 8mm Screw	02913100
56	M5 Cage Nut	04936800
57	Wing Nut	04822600
58	Woodruff Key	09823900
59	Fuel Level Sender	448010600

A20/50 SEAT & REAR BODY ASSEMBLY

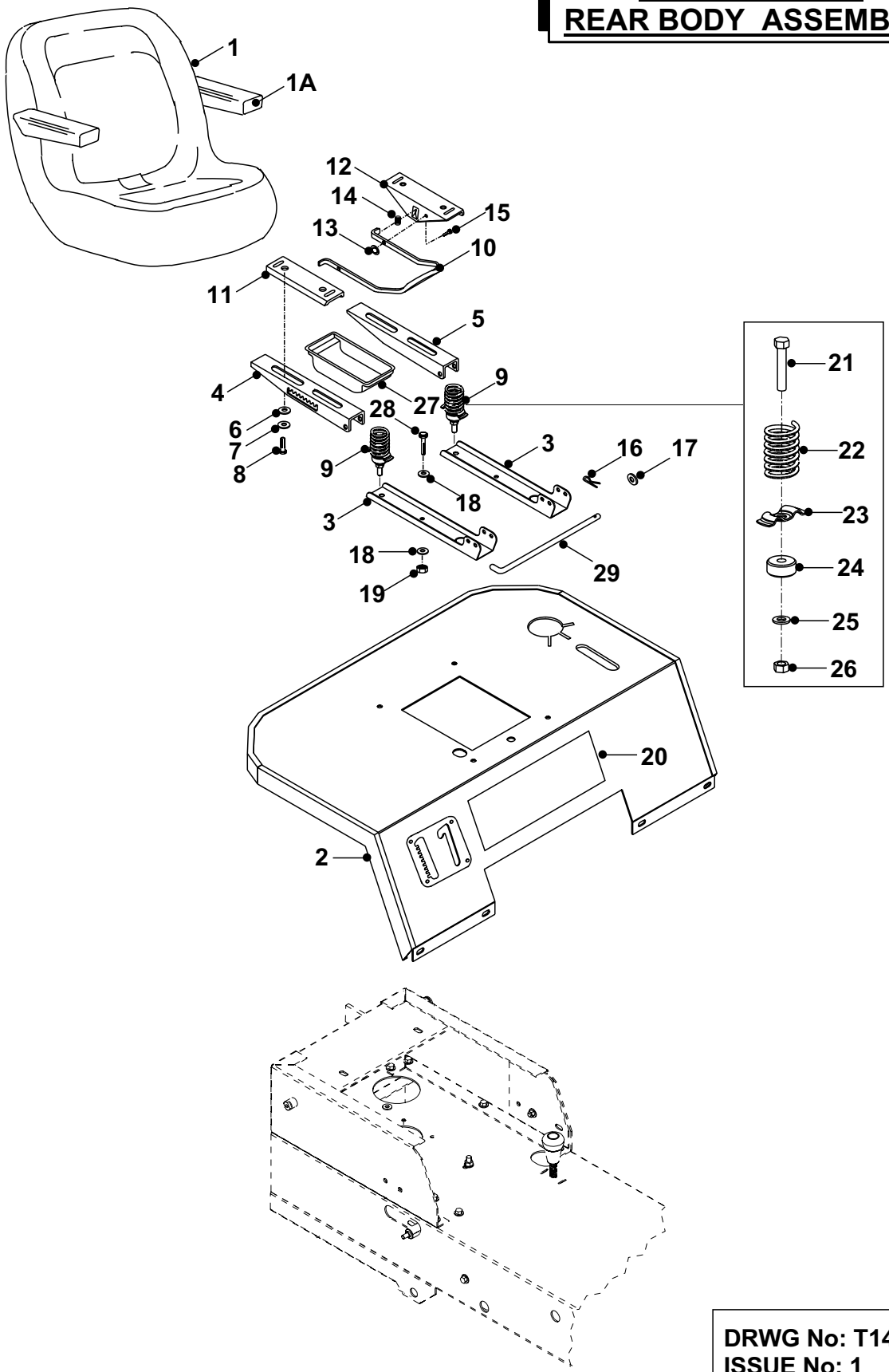

DRWG No: T1409901
ISSUE No: 1

SECTION 6.

A20/50 SEAT & REAR BODY ASSEMBLY
PARTS LIST

	PART DESCRIPTION	PART NUMBER
1	Seat	148002000
1a	Arm Rest	148002101
2	Rear Body Panel A20/50 Rear Body Panel A20/50H	327010200 328954600
3	Seat Attachment Channel	27115400
4	Adjustable Seat Channel R/H	30117700
5	Adjustable Seat Channel L/H	30117800
6	Washer 40 x 10mm HG	08118200
7	Washer 3/8” Shakeproof	08826700
8	Bolt 3/8” UNC x 3/4”	02825200
9	Seat Spring	405003200
10	Seat Handle	30203100
11	Seat Plate Adjuster R/H	30117900
12	Seat Plate Adjuster L/H	30118000
13	Starlock Washer	08868700
14	Compression Spring Universal	25831100
15	Rivet 1/4” x 1/2”	12855800
16	Rue Clip	06849100
17	Washer 5/16” T3 LP	08819500
18	Washer 5/16”	08819700
19	Nyloc Nut 5/16” UNC	04827500
20	Decal (A20/50 Mulcher)	35955900
21	Bolt 3/8” UNF x 1.1/2”	01855000
22	Adjustable Seat Spring	25845600
23	Spring Retaining Washer (Seat)	27835400
24	Seat Spring Spacer	31330800
25	Washer 3/8” T3 HP	08820100
26	Nut 3/8” UNF Nyloc	04820200
27	Tool Tray	14848500
28	Bolt 5/16” UNF x 3/4”	02827600
29	Seat Pivot Rod	31301800

A20/50 FRONT ACTUATOR & DECK CRADLE ASSEMBLIES

FRONT ACTUATOR / POTENTIOMETER & LOOM ASSEMBLY - A20/50 MK1 MODEL

SEE SECTION 13A FOR CURRENT ASSEMBLY. POTENTIOMETER NOW INCORPERATED IN FRONT ACTUATOR

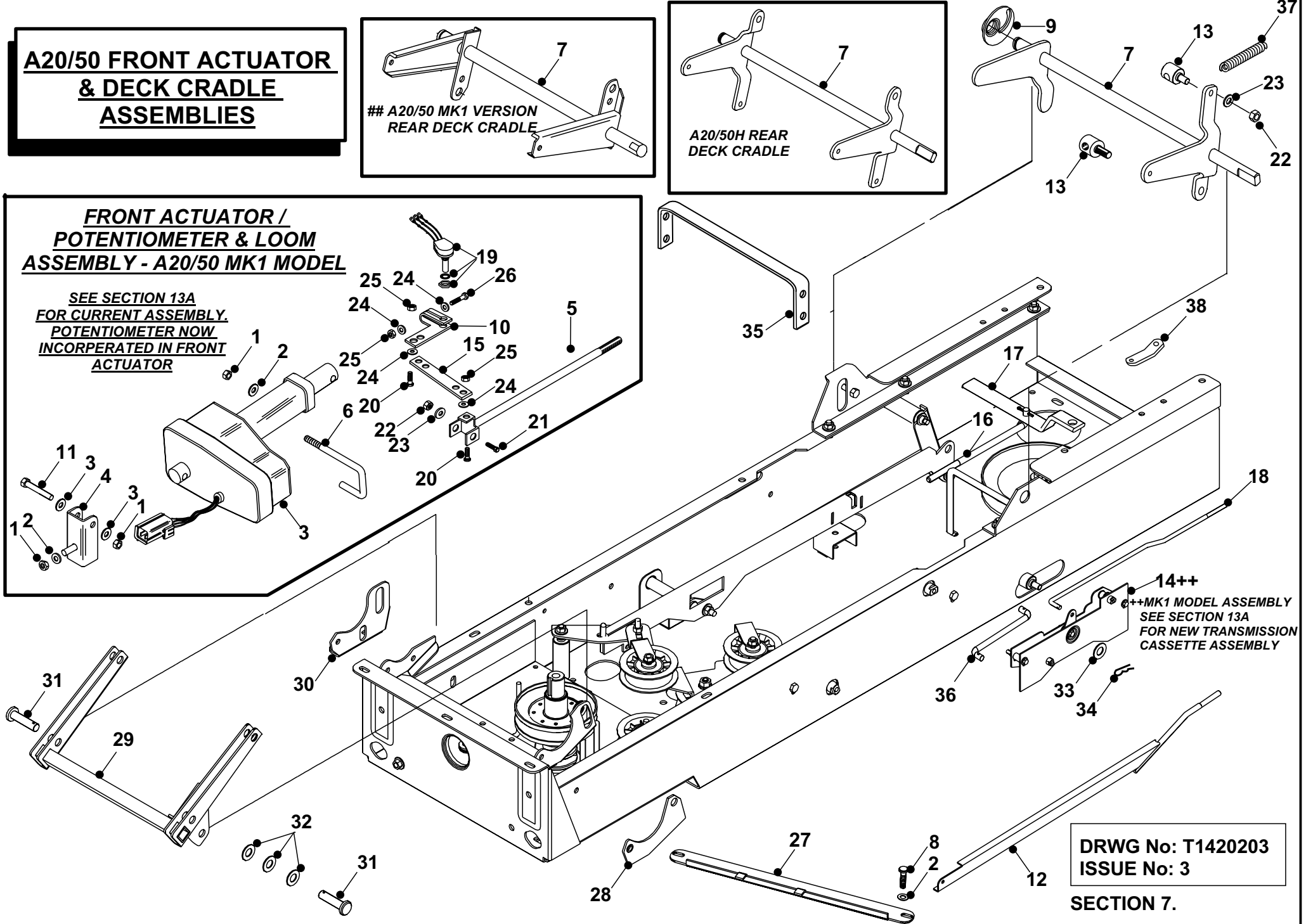

DRWG No: T1420203
ISSUE No: 3

SECTION 7.

A20/50 FRONT ACTUATOR ASSEMBLY
PARTS LIST

	PART DESCRIPTION	PART NUMBER
1	Nyloc Nut 5/16” UNF	04827500
2	Washer 5/16 “UNF	08819700
3	Cutter Deck Actuator	448002800
4	Deck Lift Actuator Mounting	327008300
5	Deck Lift Con Rod	327007801
6	Front Actuator Clamp	313004900
7	Rear Deck Cradle (old) Rear Deck Cradle (new) Rear Deck Cradle (A20/50H Model)	327015301 328954300 328954200
8	Bolt 5/16” UNF x 3/4”	02827600
9	Rear Deck Level Cam	30117601
10	Potentiometer Bracket	301040600
11	Bolt 5/16” x 2”	01820900
12	Deck Level Bar	327007900
13	Deck Level Trunnion Deck Level Trunnion (A20/50H)	189497500 189497900
14	Transmission Cassette	405002300
15	Con Rod Adjacent Plate	301040700
16	Brake Rod	313004700
17	Transaxle Brake Extension	302005300
18	Forward / Reverse Rod	313004800
19	Potentiometer & Loom	44908000
20	Bolt M5 x 12mm	01942500
21	Bolt M6 x 25mm	01902300
22	Nut M8	04920100
23	Washer M8	088000200
24	Washer M5	08911500
25	Nut M5	04885900
26	Bolt M5 x 20mm	018000100
27	Clutch Bar	302005100
28	Deck Spring Plate	30128400
29	Deck Front Carry (Front)	327006800
30	Deck Lever Bracket	301040000
31	Deck Swing Lift Pin	31339400
32	Washer 1”	08823100
33	Washer 3/8” T3 HP	08820100
34	Rue Clip	11836700
35	Deck Lift Cradle Rear	29200700
36	Cassette Link Rod	327175600
37	Deck Lift Spring	25885300
38	Deck Lift Spring Anchor	307183500

A20/50 P.T.O TRANSMISSION ASSEMBLY

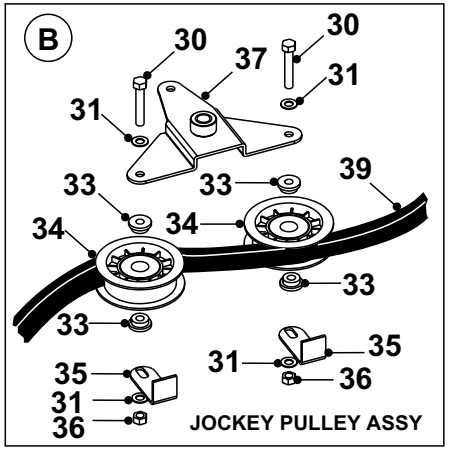

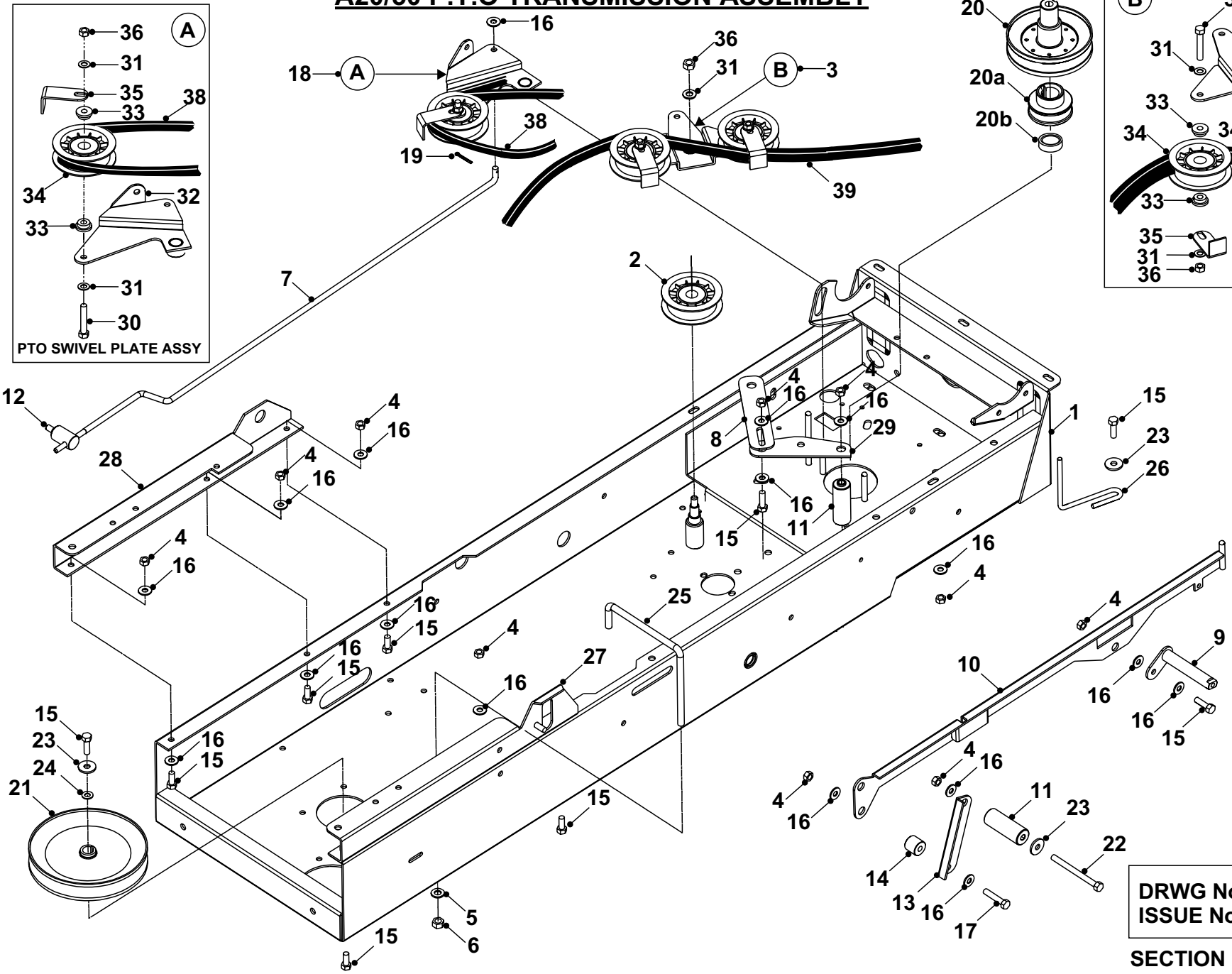

DRWG No: T1419901
ISSUE No: 1

SECTION 8.

A20/50 TRACTOR
P.T.O. & TRANSMISSION DRIVE
ASSEMBLY PARTS LIST

	PART DESCRIPTION	PART NUMBER
1	Chassis	327006300
2	Jockey Pulley	20811500
3	Jockey Pulley	405002400
4	Nyloc Nut 5/16” UNF	04827500
5	Washer 3/8” T3 HP	08820100
6	Nyloc Nut P-Type UNF	04820200
7	PTO Engage Rod	313005000
8	Clutch Adjuster Plate	302004700
9	Clutch Pedal Shaft	327008200
10	Brake Rod	327008600
11	Clutch Link Pivot Boss	183008800
12	PTO Engage Trunnion	18806100
13	Clutch /Brake Drop Arm	302004900
14	Sweeper Roller Spacer	31329200
15	M/Screw 5/16” x 1” UNF	02819600
16	Washer 5/16” T4 HP	08819700
17	Bolt 5/16” x 1.1/2” UNF	01820700
18	PTO Swivel Plate	405002500
19	Split Pin 1/8” x 1”	06823300
20	Lower Engine Pulley	327007700
20a	Upper Engine Pulley	183005300
20b	Engine Pulley Spacer	18300900
21	Transaxle Pulley	20870700
22	Bolt 5/16” x 3.1/2” UNF	01854700
23	Washer 5/16” UNF	08819800
24	Shakeproof Internal Washer	08855100
25	Rear Belt Guide Rod	313006100
26	Front Belt Retaining Rod	313006200
27	LH Transaxle Mounting Bracket	327009300
28	RH Transaxle Mounting Bracket	301041700
29	Clutch Swivel Plate	302004600
30	Bolt 5/16” x 1.3/4” UNF	01820800
31	Washer 5/16”	08819500
32	Swivel Plate	327009700
33	Sweeper Jockey Cap Boss	31351100
34	Jockey Pulley	20811500
35	Belt Retaining Bracket	27105800
36	Nyloc Nut 5/16” UNF	04827500
37	Clutch Jockey Pulley Plate	327008500
38	Belt Dayco Super II A92 (PTO)	22950100
39	Belt Dayco Super II A88 (Transmission)	22950000

A20/50 TRACTOR
HAND CLUTCH/BRAKE CONTROL MODEL
P.T.O TRANSMISSION ASSEMBLY

From Serial No: 00126.....

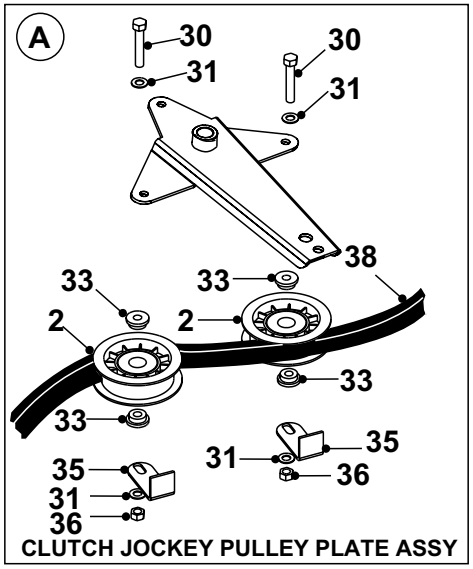

CLUTCH JOCKEY PULLEY PLATE ASSY

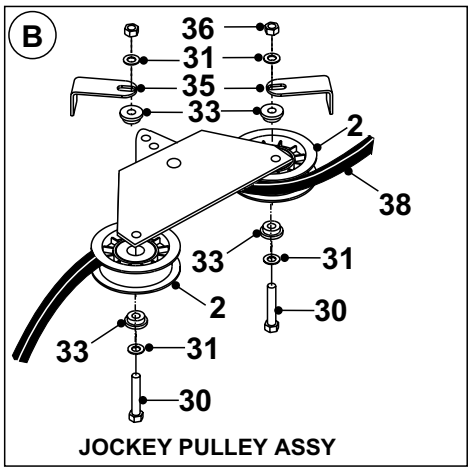

JOCKEY PULLEY ASSY

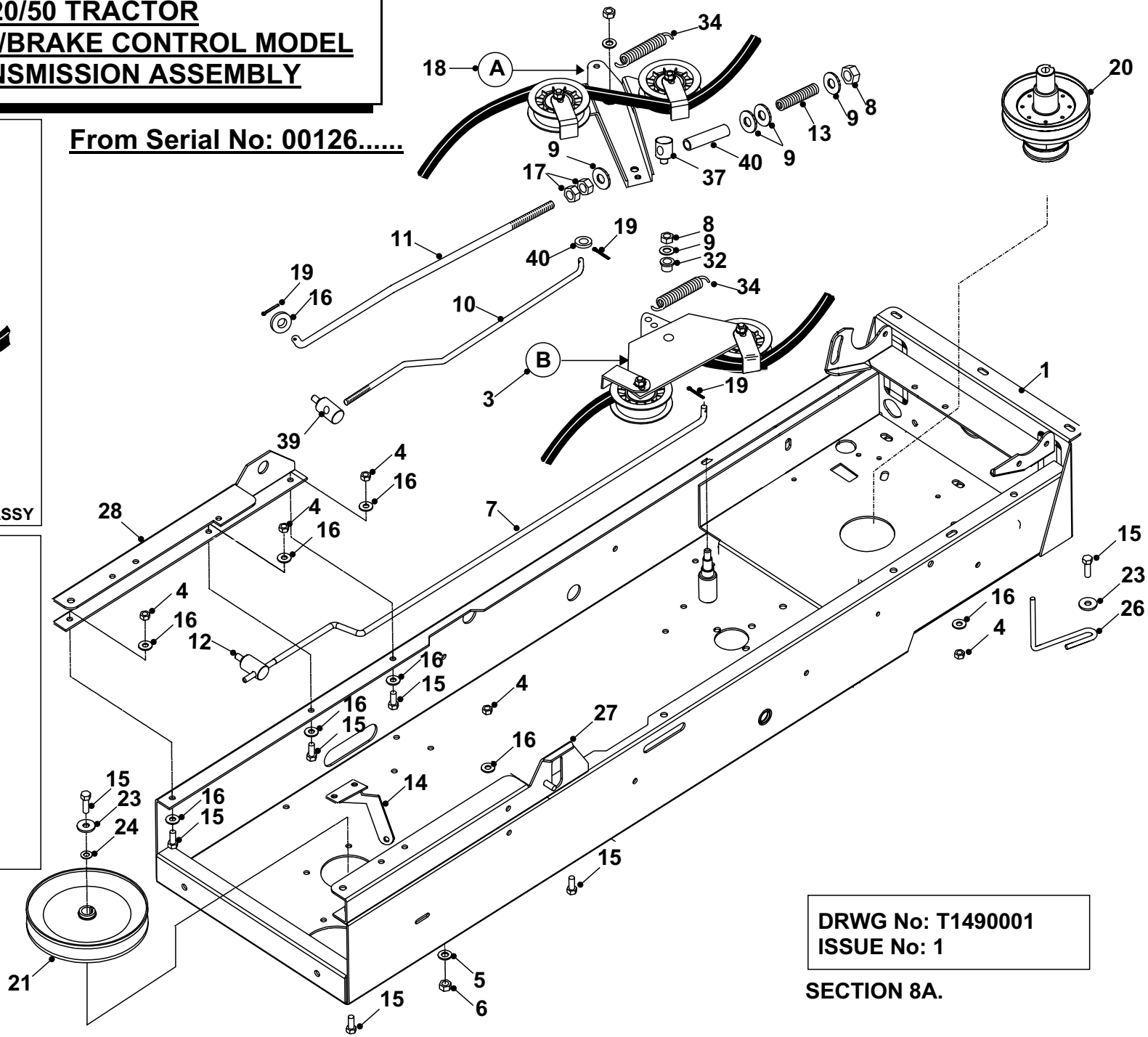

DRWG No: T1490001
ISSUE No: 1

SECTION 8A.

A20/50 TRACTOR
HAND CLUTCH / BRAKE CONTROL MODEL
P.T.O. & TRANSMISSION DRIVE ASSEMBLY
From Serial No: 00126…….
PARTS LIST

	PART DESCRIPTION	PART NUMBER
1	Chassis	327006301
2	Jockey Pulley	20811500
3	Jockey Pulley	321122700
4	Nyloc Nut 5/16” UNF	04827500
5	Washer 3/8” T3 HP	08820100
6	Nyloc Nut P-Type UNF	04820200
7	PTO Engage Rod	313010801
8	Nut 3/8” UNF	04820200
9	Washer 3/8” T3	08820100
10	Transmission Rod	313018600
11	Park Brake Engine Rod	313010701
12	PTO Engage Trunnion	18806100
13	Compression Spring Brake Rod	259405100
14	Spring Finger Plate	301119600
15	M/Screw 5/16” x 1”	02819600
16	Washer 5/16” T4 HP	08819700
17	Nut 3/8” Lock Nut Steel	049381400
18	Clutch Jockey Pulley Plate	321122300
19	Split Pin 1/8” x 1”	06823300
20	Engine Pulley	327006500
21	Transaxle Pulley	20870700
22	Bolt 5/16” x 3.1/2” UNF	01854700
23	Washer 5/16” UNF	08819800
24	Shakeproof Internal Washer	08855100
26	Front Belt Retaining Rod	313006200
27	LH Transaxle Mounting Bracket	327009300
28	RH Transaxle Mounting Bracket	301041700
30	Bolt 5/16” x 1.3/4” UNF	01820800
31	Washer 5/16”	08819500
32	Non Flanged Oilite Bush	52824700
33	Sweeper Jockey Cap Boss	31351100
34	Spring Belt Tension	25849600
35	Belt Retaining Bracket	27105800
36	Nyloc Nut 5/16” UNF	04827500
37	Trunnion Jockey Plate	183018600
38	Belt Dayco Super II A91	228001500
39	Trunnion Park Brake Rod	183018500
40	Brake Rod Tube	183019100

A20/50 TRACTOR
HAND CLUTCH/BRAKE CONTROL MODEL
TUFF TORQ HYDROSTATIC TRANSAXLE

From Serial No: 00126.....

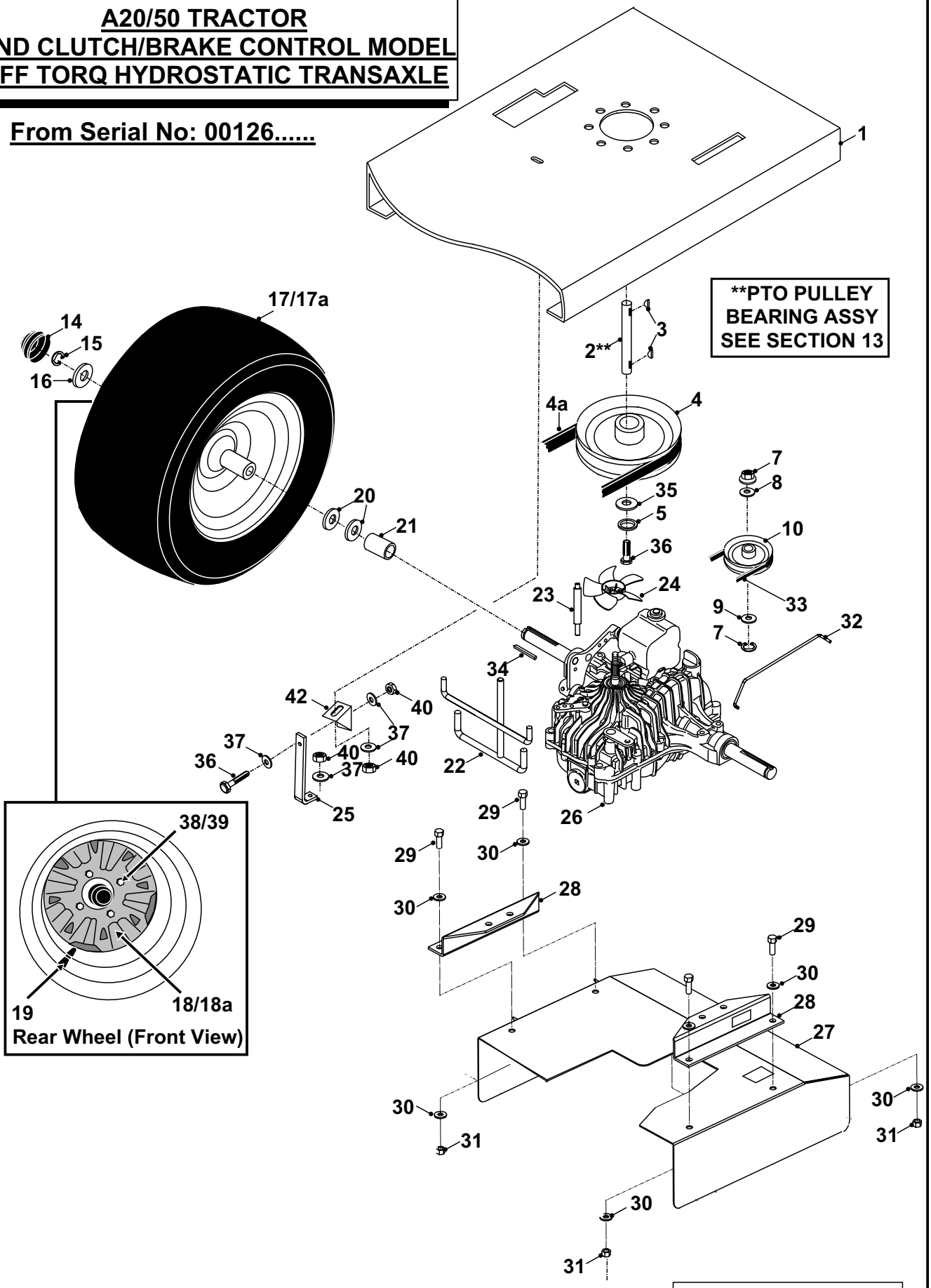

DRWG No: T1470101
ISSUE No: 1

SECTION 9A.

A20/50 TRACTOR HAND CLUTCH / BRAKE CONTROL MODEL
TUFF TORQ HYDROSTATIC
From Serial No: 00126……
PARTS LIST

	PART DESCRIPTION	PART NUMBER
1	Chassis	327006301
2	PTO Shaft	31306000
3	Woodruff Key	09823900
4	Pulley 7”	20870700
4a	Belt Dayco A91 Super II	228001500
5	Washer 5/16” Shakeproof	08855100
7	Flange Nut Nyloc M10	049381600
8	Washer 320d x 10.5 i.d. x 3thk	089418800
9	Washer 9/16” T4 LP	08917800
10	Pulley	20904400
14	Hub Cap	14811800
15	Circlip 25mm External	078000500
16	Thrust Washer	307191900
17	Rear Wheel Complete	198001500
17a	Rear Tyre	198000400
18	Rear Wheel Rim	198000500
	Grease Nipple	11898800
	`O’ Ring	24898700
	Washer 5/16” Shakeproof	08823500
18a	Rear Wheel Hub	198001300
19	Valve	14889200
20	Washer 3/4” T3 LP	08822900
21	Wheel Spacer 64.5mm x 38mm o.d x 25.5mm i.d.	183018500
22	Belt Tree	327021800
23	Transaxle Steady LH	313019100
24	Fan K62 Transaxle	148008000
25	Transaxle Steady RH	292003500
26	Tuff Torq K62 Transaxle	478000400
27	Transaxle Deflector	301119700
28	Deflector Mounting Bracket	301119500
29	Bolt 5/16” UNF x ¾”	02827600
30	Washer 5/16”	08819700
31	Nut Nyloc 5/16” UNF	04827500
32	Dump Valve Rod	313010600
33	Belt A91 Dayco Super 2	228001500
34	Key 2” x 3/16”	09830700
35	Washer 5/16” ID x 1” OD	08819800
36	Bolt 5/16” UNF x3/4”	02827600
37	Washer 5/16” T4 HP	08819700
38	Wheel Stud	128000200
39	Wheel Nut	048000800
40	Nut Nyloc 5/16” UNF	04827500
42	Torque Bracket	30137700

	PART DESCRIPTION	PART NUMBER
38	Bolt 1/4” UNF x 3/4”	02827700
39	Bolt M4 x 20mm	01917000
40	Bolt M8 Taptite	01821000
41	Nut M4 Nyloc	04917100
42	Transmission Drive Belt Dayco A88	22950000
43	Key 2” x 3/16”	09830700
44	Washer 5/16” ID x 1” OD	08819800
45	Bolt 5/16” UNF x 3/4”	02827600
46	Washer 5/16” T4 HP	08819700
47	Fan	148002900

A20/50 ELECTRICAL PARTS

1.MAIN WIRING LOOM PT/ NO: 448004100
2. H.E. DECK / SWEEPER LOOM PT/NO: 44948700**/448005900##
3. NET EMPTYING LOOM KIT PT/NO:448004300

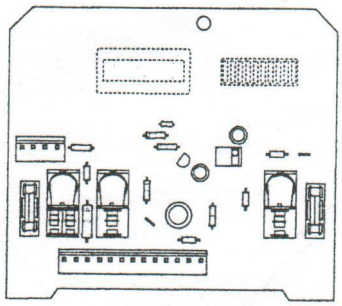

4. P.C.B.
PT/NO: 448001900

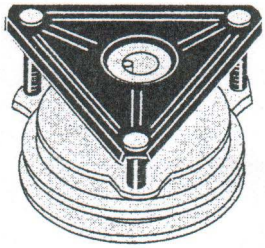

5. WARNER CLUTCH
PT/ NO: 44815200

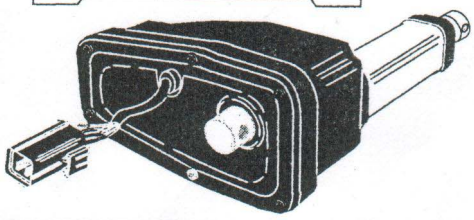

6. ACTUATOR A20/50; DECK / SWEEPER / NET
PT/NO: 448002800**

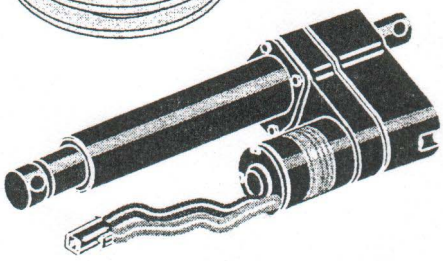

6. ACTUATOR A20/50; DECK / SWEEPER / NET
PT/NO: 44805201##

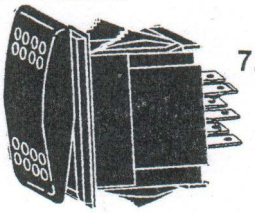

7. DECK / NET EMPTY SWITCH
PT/NO: 448001501

8. SWEEPER LIFT SWITCH
PT/NO: 448001401

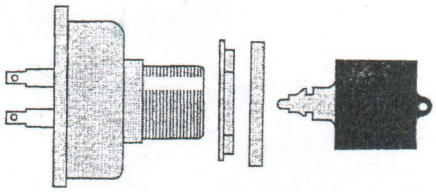

9. IGNITION SWITCH - PT/NO: 44812900
10. IGNITION FIXING NUT - PT/NO: 52813200
11. IGNITION CAP BEZEL - PT/NO: 52813100
12. IGNITION KEY - PT/NO: 52813000

13. DECAL - PCB HOUR METER / CUTTER DECK HEIGHT
PT/NO: 358002800

14. DECAL - HEADLIGHTS / IGNITION LIFT
PT/NO: 358002600

15. DECAL - CLUTCH / CHOKE / LIFT
PT/NO: 358002200

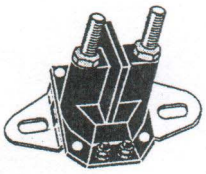

16. SOLENOID PT/No 44814801

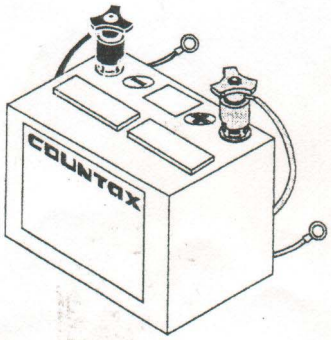

17. BATTERY 12V PT/No 45814100
18. BATTERY CONNECTOR (+) (RED) PT/No 44812701
19. BATTERY CONNECTOR (-) (BLACK) PT/No 44812801
20. BLACK LEAD BATTERY TO CHASSIS PT/No 44876900
21. RED LEAD BATTERY TO SOLENOID PT/No 44877000

DRWG No: T1350301
ISSUE No: 1

A20/50 ELECTRICAL
PARTS LIST

	PART DESCRIPTION	PART NUMBER
1	Main Wiring Control Loom A20/50	448004100
2	H.E Deck / Sweeper Loom	44048700**/448005900##
3	Net Emptying Loom	448004300
4	H.E. Printed Circuit Board	448001900
5	Warner Electrical Clutch	44815200
6	Actuator LA10 Deck / Sweeper /Net	448002800**/448005800##
7	Deck / Net / Empty Switch	448001501
8	Sweeper Lift Switch	448001401
9	Ignition Switch	44812900
10	Ignition Fixing Nut	52813200
11	Ignition Key Bezel	52813100
12	Ignition Key	52813000
13	Decal H.E. - PCB Hour Meter / Cutter Height Deck	358002800
14	Decal - Headlights / Ignition / Lift	358002600
15	Decal – Clutch / Choke / Lift	358002600
16	Starter Solenoid	44814801
17	Battery 12V	45814100
18	Battery Terminal Positive (+) (Red)	44812701
19	Battery Terminal Negative (-) Black	44812801
20	Black Battery to Earth Terminal	44876900
21	Red Battery to Solenoid	44877000

A20/50 TRACTOR HE WIRING LOOM

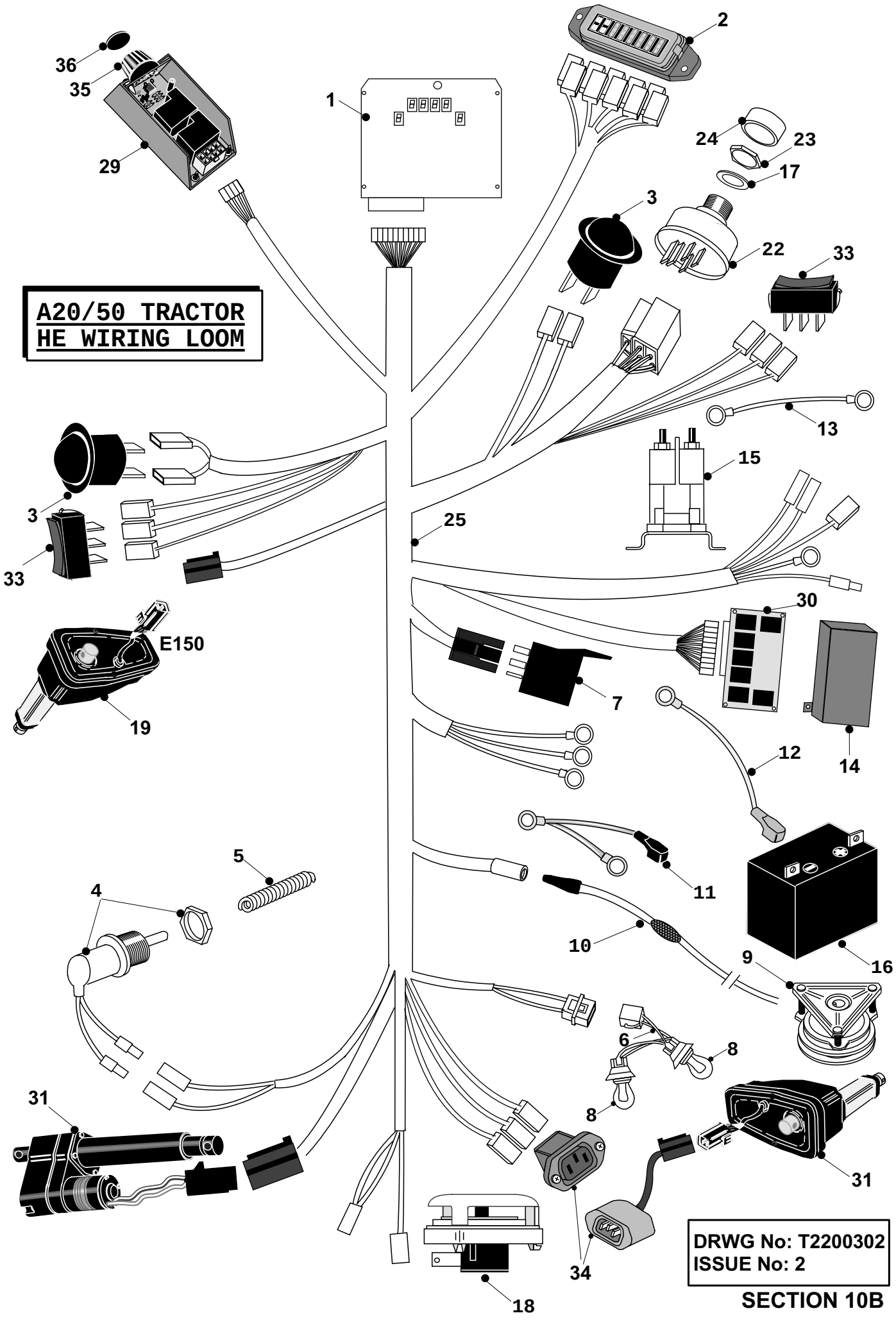

DRWG No: T2200302
ISSUE No: 2

SECTION 10B

A20/50 TRACTOR
H.E. LOOM
PARTS LIST

	PART DESCRIPTION	PART NUMBER
1	Main Control Printed Circuit Board	448009400
2	Fuse Box Holder	301139400
3	Rocker Switch – Headlights & Clutch Engage	448008700
4	Brake Switch c/w Spade Terminals	44945001
5	Safety Switch Spring	25813801
6	Headlight Loom	448010400
7	Electric Relay 12v / 30amp	449559100
8	Bulb Hella 12V 21W	448008500
9	Warner Electric Clutch A20/50	44815200
10	Clutch Loom Magstop	44946800
11	18 & 20hp Positive Red Lead Battery to Solenoid	448010000
12	Black Earth Lead Battery to Chassis	44812402
13	Start Lead – Briggs & Stratton Engines only	44812500
14	Sweeper & Net PCB Cover	307187800
15	Starter Solenoid – Briggs & Stratton Engines only	44814801
16	Battery 12V – Dry Charged	458141300
17	Ignition Washer 23 x 16 x 2mm	089418900
18	Seat Switch	44949500
19	Deck Lift Actuator E150 c/w Potentiometer	448007700
20	Fuse Spade 10A (not illustrated)	44889500
21	Fuse Spade 20A (not illustrated)	44835000
22	Ignition Switch	44812900
23	Ignition Fixing Steel Nut M16	048001300
24	Ignition Cap Bezel	52813100
25	Main Loom A20/50HE + Fuel Sender 2003 Main Loom A20/50H + Fuel Sender 2003	448015300 448015100
26	Tie Wrap (Not Illustrated)	52825400
27	Tie Wrap Mount (Not Illustrated)	52816800
28	Tie Wrap Self Adhesive (Not Illustrated)	52816700
29	Rotary Switch Deck Control / Printed Circuit Board	449559601
30	Sweeper And Net H.E. Printed Circuit Board (LA10 Actuator)	448009200
31	Actuator LA10 Fast Deck Lift Sweeper	448002800
32	Fuse Spade 30A (not illustrated)	449559200
33	Switch (on / off / on)	448008900
34	A20/50 PGC Net Empty Loom	448004300
35	Knob	148010600
36	Cap	148011000

A20/50 REAR DISCHARGE DECK

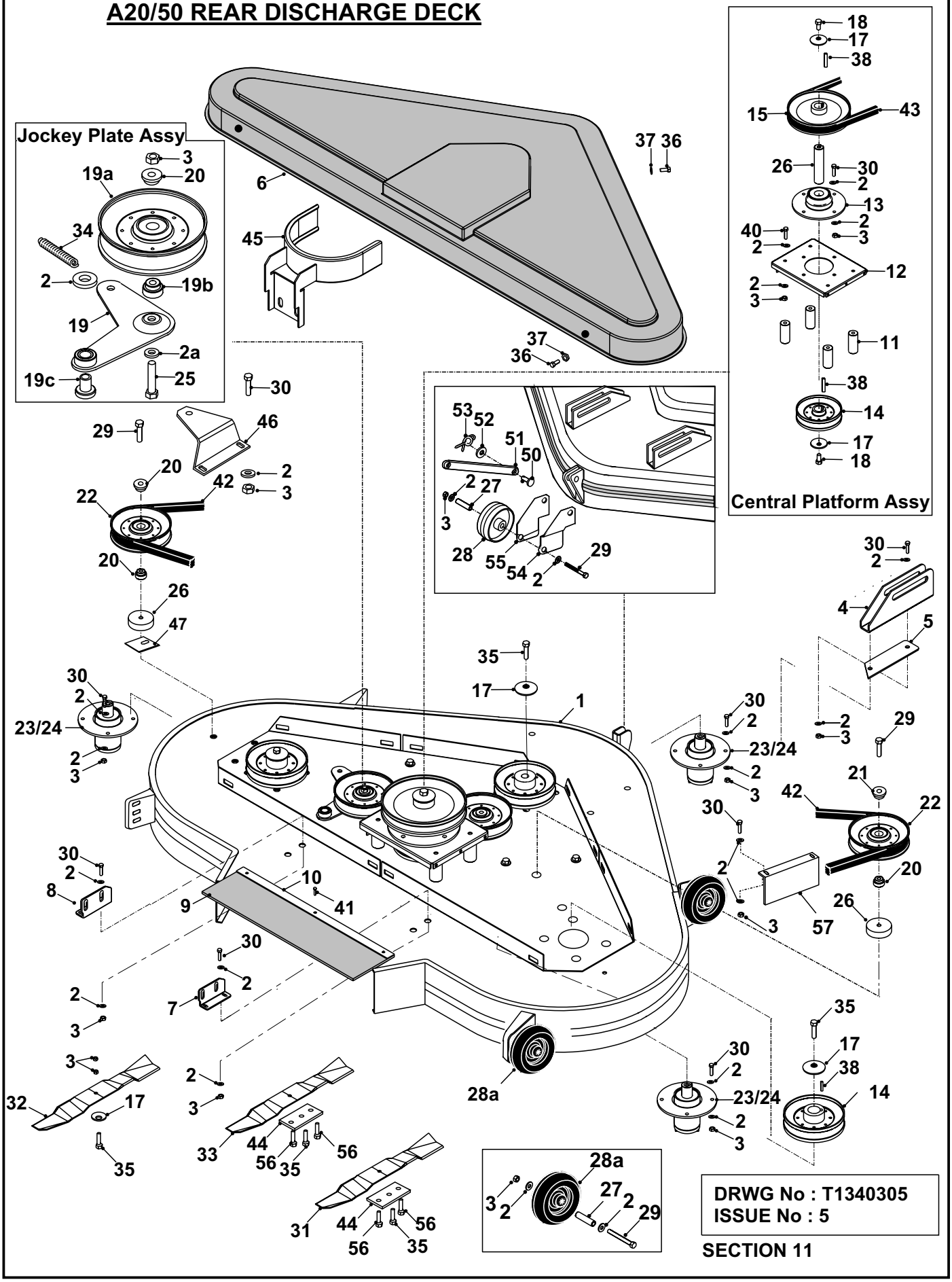

A20/50 REAR DISHARGE DECK
PARTS LIST

	PART DESCRIPTION	PART NUMBER
1	50” Rear Discharge Deck	321001301
2	Washer M8 x 25 x 3mm	08819800
2a	Washer 5/16” UNF T3	08819500
3	5/16” UNF Nyloc Nut	04827500
4	Front Deck Bracket	302005000
5	Deck Bracket Spacer Plate	301043000
6	Rear Discharge Deck Cover	148005000
7	Rear Universal Deck Bracket RH	307186700
8	Rear Universal Deck Bracket LH	307186600
9	Rear Discharge Rubber Flap	148004900
10	Rear Discharge Rubber Fixing Strip	301050900
11	Rear Discharge Platform Spacer	183012000
12	Rear Discharge Platform	301050800
13	Rear Discharge Bearing Housing	405005000
14	Internal Deck Pulley	20869500
15	Deck Drive Pulley	20870200
17	Dome Washer	08819900
18	3/8” UNF x 3/4” S/Screw	02874500
19	Rear Discharge Jockey Plate Bracket	327021600
19a	Deck Idler Pulley	20869600
19b	Jockey Wheel Spacer	18831600
19c	Deck Hanging Pivot - Front	18321000
20	Jockey Wheel Spacer	18831600
21	Sweeper Jockey Cap Boss	31351100
22	Deck Idler Pulley	20869600
23	Short Shaft Bearing Housing with Studs	40503604
24	Short Shaft Bearing Housing	40503704
25	5/16” UNF x 1 ¼ Bolt	01820600
26	Deck Idler Pulley Spacer	18300420
27	Scuff Wheel Hub	31337600
28	Anti-Scalp Wheel	19905500
28a	Anti – Scalp Wheel	149495800
29	5/16” UNF x 2 ¾” Bolt	01821200
30	5/16” UNF x 1.1/4” S/Screw	02820600
31	RH Cutter Blade 19”	169381300
32	LH Cutter Blade 19”	169381400
33	RH Cutter Blade 17.5”	16929000
34	Deck Tension Spring	25906200
35	3/8” UNF x 1 ¼” Bolt	02820000
36	M8 x 20mm Bolt	02825900

37	M8 Captive Nut	04825800
38	1/4 " x ¼" x 22mm Key	098450100
40	5/16" UNF x 3" Bolt	01832300
41	Rivet	12860100
42	Deck Belt BB155	22950200
43	Deck Drive Belt B57	22871200
44	Locking Tab	27111200
45	Rear Discharge Deck Drive Belt Guard	327014300
46	Idler Pulley Support Bracket	301057300
47	Deck Spacer Plate	301058800
48	IBS Deck Decal (50") 127cm (location rear deck)	358010101
49	Drive Shaft	183012400
50	Deck Push Rod Pin	31338200
51	Deck Tension Bar	29203700
52	Washer 3/8" T3	08800330
53	Rue Clip	11836700
54	Idler Pulley Support Bracket	301057300
55	Scalp Flat Centre Plate	307022700
56	Bolt M8 x 15mm	01864800
57	Deflector Plate	301050600

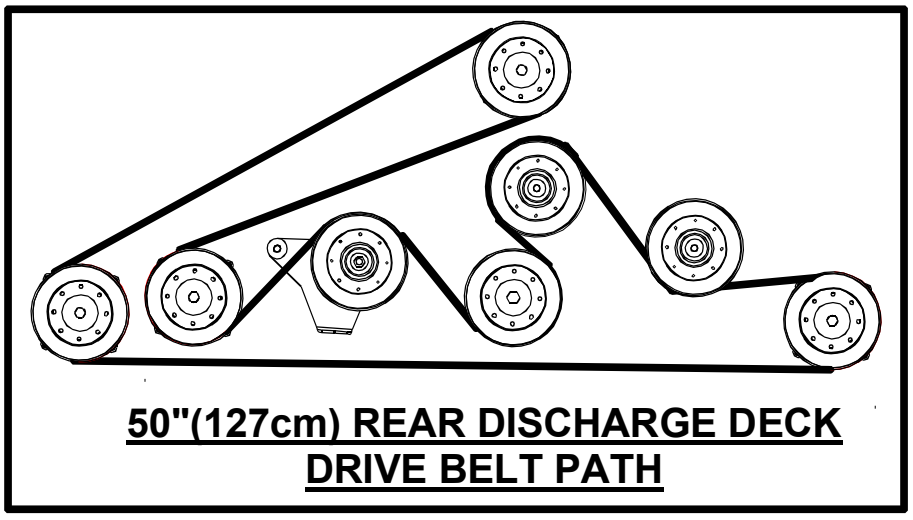

50"(127cm) REAR DISCHARGE DECK DRIVE BELT PATH

A20/50 MULCHER DECK

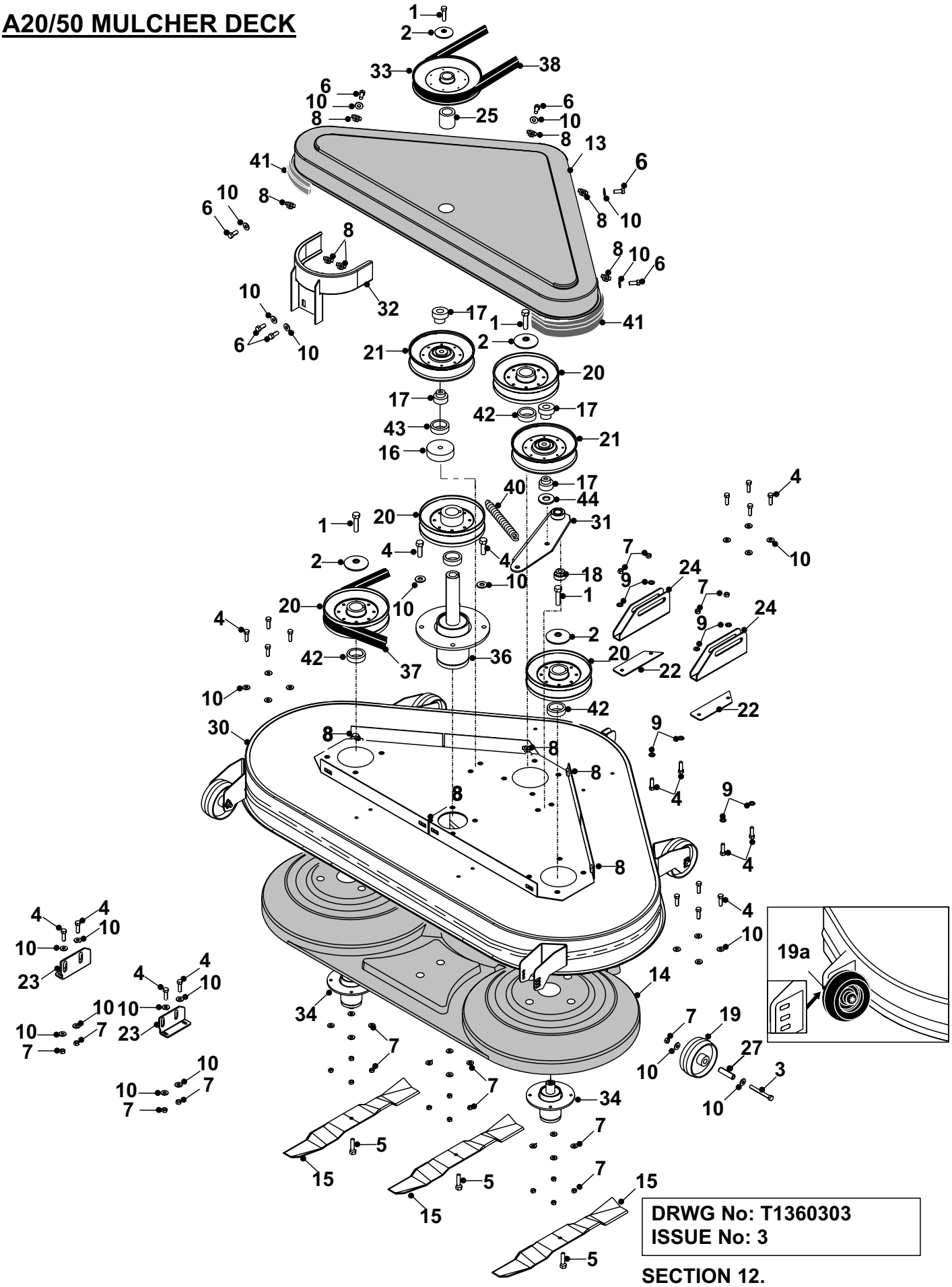

DRWG No: T1360303
ISSUE No: 3

SECTION 12.

A20/50 MULCHER DECK
PARTS LIST

	PART DESCRIPTION	PART NUMBER
1	Bolt 5/16” x 1.1/4” UNF	01820600
2	Dome Washer 1.3/4” x 3/8” x 1/8”	08819900
3	Bolt 5/16” x 2.3/4” UNF HT ZP	01821200
4	S/Screw 5/16” x 1.1/4” UNF	01820600
5	Bolt 3/8” UNF x 1.1/4”	02825300
6	M/Screw 5/16” UNF x 1”	02819600
7	Nyloc Nut 5/16” UNF	04827500
8	Captive Nut M8	04825800
9	Washer 5/16” T3 LP ZP	08819500
10	Washer M8 x 25 x 3mm	08819500
13	Deck Cover	148003000
14	Mulcher Deck Liner	148003100
15	19” Mulcher Blade R/H	16938100
16	Deck Idler Pulley Spacer	18300420
17	Front Deck Hanging Bracket Pivot	18321000
18	Pivot Spacer	189498400
19	1/2” Bore Anti - Scalp Wheel	19905500
19a	Anti – Scalp Wheel (`99)	149495800
20	Deck Pulley	20869500
21	Deck Idler Pulley c/w Bearing	20869600
22	Spacer Plate	301043000
23	Rear Deck Universal Hanging Bracket L/H Rear Deck Universal Hanging Bracket R/H	301062700 301062800
24	Front Deck Hanging Bracket	302005000
25	Deck Drive Pulley Spacer	31328300
27	Scuff Wheel Hub	31337600
30	Mulcher Deck Shell	327006600
31	Jockey Pulley Plate	327362400
32	Drive Belt Guard	327008700
33	Deck Drive Pulley	32729000
34	Bearing Housing - Short	40503704
36	Bearing Housing - Long	40503504
37	Dayco Belt BB112	228000900
38	Dayco Belt B57	22871200
39	Mulching Deck Decal (50”) 127cm (location rear deck)	358009701
40	Deck Tension Spring	25906200
41	Rubber Edge Trim	14896100
42	Top Pulley Spacer	183023100
43	Bridge Spacer	31326100
44	Washer M8	08819500

A20/50 RUNNING BOARD & REAR BODY ASSEMBLIES

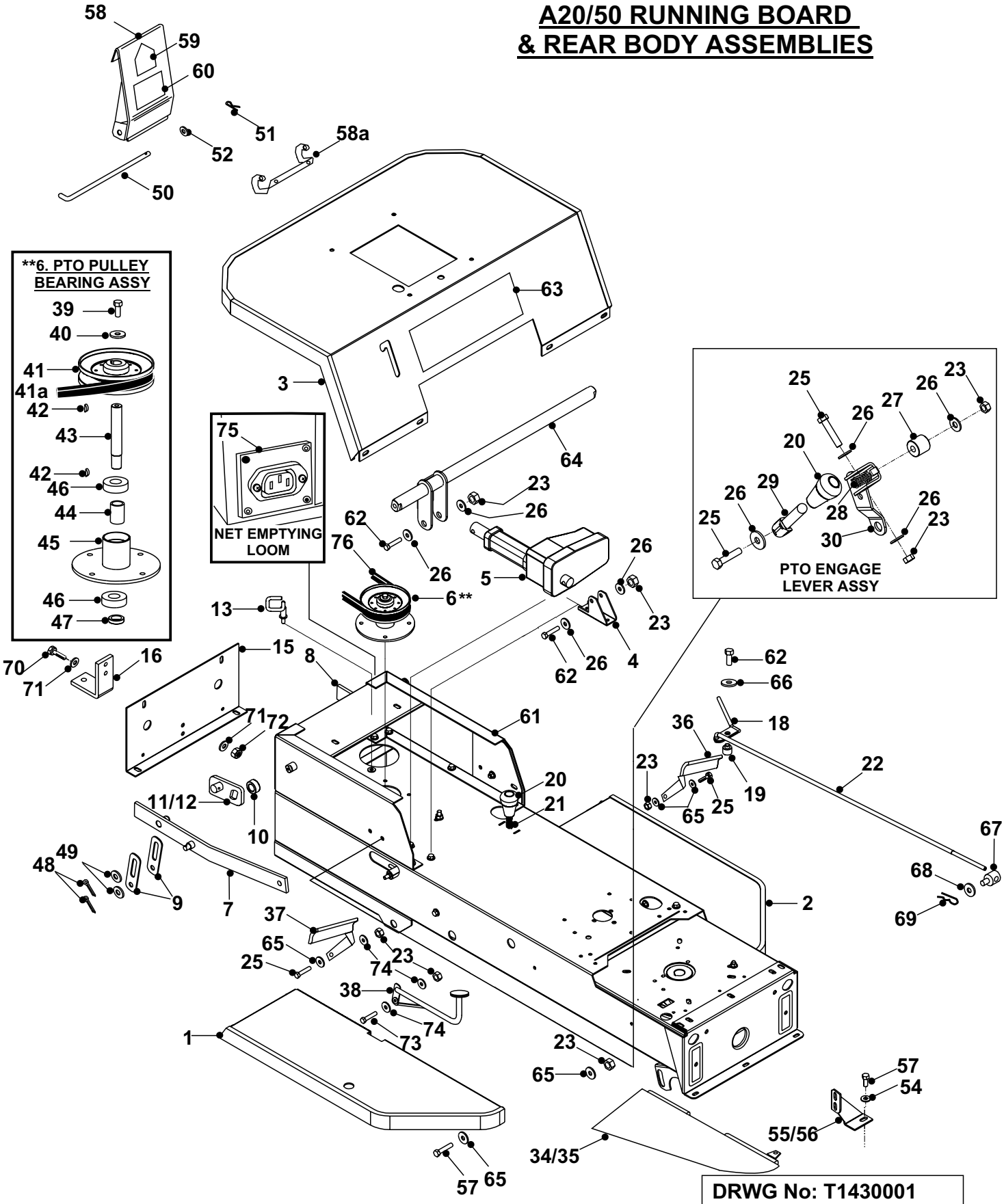

DRWG No: T1430001
ISSUE No: 4

SECTION 13.

A20/50 RUNNING BOARD
& REAR BODY ASSEMBLIES
PARTS LIST

	PART DESCRIPTION	PART NUMBER
1	Running Board R/H	327010100
2	Running Board L/H	327010000
3	Rear Body Panel	327010200
4	Rear Lift Actuator Mounting	302005600
5	Sweeper Deck Actuator Type LA10	448005800
6	5” PTO Pulley Bearing & Shaft	327002600
7	Sweeper Lift Arm R/H	32720300
8	Sweeper Lift Arm L/H	32721100
9	Sweeper Lift Plate	30133500
10	Sweeper Lift Bar Spacer	31323500
11	Sweeper Lift Plate R/H	327171600
12	Sweeper Lift Plate L/H	327171700
13	Sweeper Belt Guide	32723800
15	Rear Chassis Panel	301041600
16	Tow Bracket	29200101
18	Deck Tension Lever	32700600
19	Deck Tension Lever Boss	18317000
20	Lever Knob	14804800
21	Park Brake Spring	25805000
22	Deck Tension Rod	31805601
23	Nyloc Nut 5/16” UNF	04827500
25	Screw 5/16” UNF x 1”	01820700
26	Washer 5/16” x 1”	08819800
27	Sweeper Internal Roller Spacer	31329201
28	Compression Spring Universal	25831100
29	PTO Engage Lever	32708700
30	PTO Lever Plate	30134501
31	Foot Mat R/H (Not Illustrated)	14800600
32	Foot Mat L/H (Not Illustrated)	14800700
33	Centre Mat (Not Illustrated)	14800800
34	Engine Side Panel R/H	14897100
35	Engine Side Panel L/H	14897000
36	Clutch / Brake Pedal	302014300
37	Forward Pedal	302014200
38	Reverse Pedal	327014400

39	Hex Head Machine Screw 5/16 x 3/4”	02827600
40	Washer 5/16” ID x 1”	08819800
41	5” P.T.O. Pulley	208000600
41a	Belt Dayco Super II A92	22950100
42	Woodruff Key	09835300
43	Tractor PTO Shaft	32306000
44	PTO Centre Spacer	31334804
45	PTO Bearing Housing	32700300
46	Bearing 6203	10802200
47	PTO End Spacer	31334800
48	Split Pin 1/8” x 1”	07823300
49	Washer 1/2” T3	08822500
50	Pivot Rod	313017800
51	Rue Clip	06849100
52	Washer 5/16” T3 LP	08819500
54	Washer 5/16” T4 ZP	08819700
55	Side Panel Bracket L/H	302006200
56	Side Panel Bracket R/H	302006300
57	M/Screw 5/16” x 3/4”	02827600
58	PTO Flap	30150700
58a	PTO Flap Hinge	302005200
59	PTO Danger Decal	35804600
60	Sweeper Belt Decal	35809400
61	Rear Seat Box	327010400
62	Bolt 5/16” UNF x 1.75	01820800
63	Decal (A20/50 Mulcher)	35945900
64	Sweeper Lift Bar	327009400
65	Washer 5/16” T4 HP	08819700
67	Trunnion	18805500
68	Washer M8	08820100
69	Rue Clip	11836700
70	Bolt M10	01915300
71	Washer M10	088001300
72	Nut M10	04872100
73	Bolt 5/16” x 1.1/2” UNF	01820700
74	Washer 5/16” UNF	08819700
75	Net Emptying Loom	448004300
76	Dayco Belt A49	22923400

A20/50 TRACTOR
HAND CLUTCH/BRAKE CONTROL MODEL
RUNNING BOARD
& REAR BODY ASSEMBLIES

From Serial No: 00126.....

****6. PTO PULLEY BEARING ASSY**

SEE SECTION 13

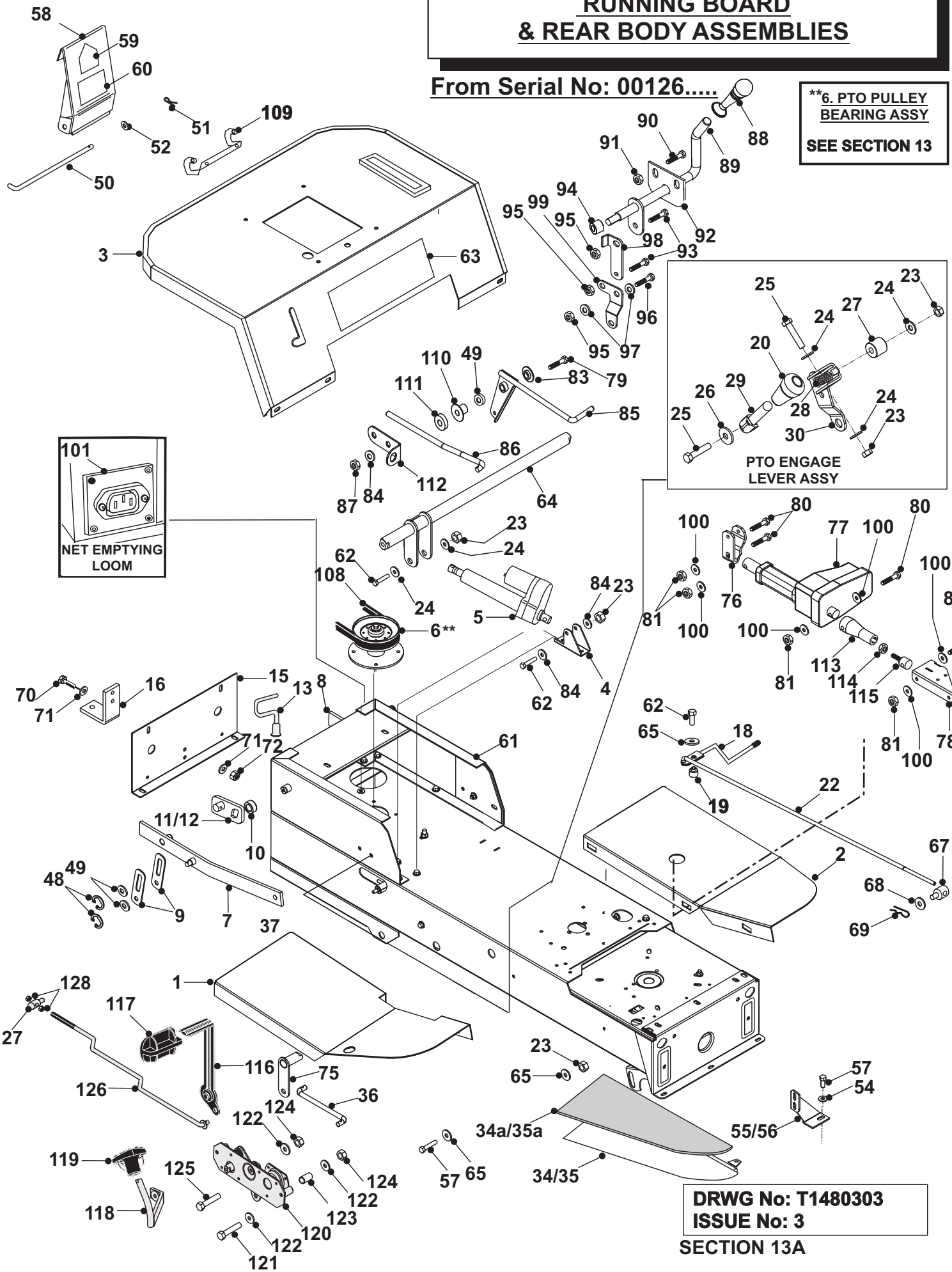

DRWG No: T1480303
ISSUE No: 3

A20/50 HAND CONTROL MODEL
RUNNING BOARD
& REAR BODY ASSEMBLIES
PARTS LIST

	PART DESCRIPTION	PART NUMBER
1	Running Board R/H	321122500
	Running Board R/H (for Germany)	327010100
2	Running Board L/H	321122400
	Running Board L/H (for Germany)	327010000
3	Rear Body Panel	327010200
4	Rear Lift Actuator Mounting	302005600
5	Sweeper Deck Actuator LA10	448002800
6	5" PTO Pulley Bearing	208000400
7	Sweeper Lift Arm R/H	32720300
8	Sweeper Lift Arm L/H	32721100
9	Sweeper Lift Plate Sweeper Lift Plate L/H** Sweeper Lift Plate R/H**	30133500 301132700** 327171600**
10	Sweeper Lift Bar Spacer	31323500
11	Sweeper Lift Bar R/H	32721200
12	Sweeper Lift Bar L/H	32721300
13	Sweeper Belt Guide	32723800
15	Rear Chassis Panel	301041600
16	Tow Bracket	29200101
18	Deck Tension Lever	321122800
19	Deck Tension Lever Boss	18317000
20	Lever Knob	14804800
21	Transmission Cassette	405006000
22	Deck Tension Rod	31805601
23	Nyloc Nut 5/16" UNF	04827500
25	Screw 5/16" UNF x 1"	01820700
26	Washer 5/16" x 1"	08819800
27	Sweeper Internal Roller Spacer	31329201
28	Compression Spring Universal	25831100
29	PTO Engage Lever	32708700
30	PTO Lever Plate	30134501
31	Foot Mat R/H	148008800
31	Foot Mat R/H (German Model)	148008600
32	Foot Mat L/H	148008900
**	Item 9. This Lift Plate to be used when 30133501 Does not give enough lift.	**

33	Centre Runner Mat	14800800
34	Engine Side Panel R/H	14897100
34a	Side Panel Foam R/H	149497500
35	Engine Side Panel L/H	14897000
35a	Side Panel Foam L/H	149497600
36	Forward / Reverse Cassette Rod	313018900
37	Forward Pedal	321123900
38	Reverse Pedal	321124000
	Items 39 to 47	SEE SECTION 13
48	E-Clip M12	078000800
49	Washer 1/2” x 1”	08822500
50	Pivot Rod	313017800
51	Rue Clip	06849100
52	Washer 5/16” T3 LP	08819500
54	Washer 5/16” T4 ZP	08819700
55	Side Panel Bracket L/H	302006200
56	Side Panel Bracket R/H	302006300
57	M/Screw 5/16” x 3/4”	02827600
58	PTO Flap	30150700
59	PTO Danger Decal	35804600
60	Sweeper Belt Decal	35809400
61	Rear Seat Box	327010400
62	Bolt 5/16” UNF x 1.75	01820800
63	Decal (A20/50 Mulcher)	35945900
64	Sweeper Lift Bar	327009400
65	Washer 5/16” T4 HP	08819700
67	Trunnion	18805500
68	Washer M8	08820100
69	Rue Clip	11836700
70	Bolt M10	01915300
71	Washer M10	088001300
72	Nut M10	04872100
73	Bolt ¼” X 1”UNF	01844700
74	Shakeproof Washer 3/8”	08826700
75	Linkb Rod	327022200

76	Deck Lift Actuator Arm	301005500
77	Cutter Deck Actuator Type E150 (c/w Potentiometer)	448007700
78	Actuator Bracket	327015400
79	Bolt 5/16” x 2” UNF	01820900
80	Bolt 3/8” x 2.1/4” UNF	01821500
81	Nut 3/8” UNF	04855400
83	Pivot Boss	31306100
84	Washer 5/16”	08819700
85	Pedal Plate	321122200
86	Diff. Lock Control Rod	313010400
87	Nut 5/16” Nyloc	04827500
88	Hand Brake Knob	409427000
89	Park Brake Lever	327022100
90	Bolt M6 x 20mm	018000300
91	Nut M6	04920500
92	Park Brake Lever Support Plate	301119100
93	Bolt M8 x 30mm	018001200
94	Park Brake Lever Spacer	183018700
95	Nut M8	04850600
96	Bolt M8 x 50mm	018001800
97	Washer 25mm	028001800
98	Park Brake Upper Link Plate	301120100
99	Park Brake Lower Link Plate	301120200
100	Washer 3/8”	088001500
101	Net Empty Loom	448004300
102	Pedal Spacer	321123400
103	Bolt ¼” x 3” UNF	028662400
104	Washer 5/8”	08822700
105	Bolt ¼” x 2” UNF	01857700
106	Nut Nyloc ¼”	04819400
107	Spacer	31322200
108	Dayco Belt A49	22923400
109	PTO Flap Hinge	302005200
110	Jockey Plate Pivot	31329000
111	Bridge Spacer	31326100
112	Park Brake Switch Bracket (long)	307022200

113	Deck Lift Actuator Adjuster Body	187184800
114	Nut M12	049381200
115	Deck Lift Actuator Screw	187184900
116	Forward Pedal Rod	327361200
117	Forward Pedal Rubber (large)	148013700
118	Reverse Pedal Rod	327361300
119	Reverse Pedal Rubber (small)	148013800
120	Transmission Cassette	409427400
121	Bolt 5/16” x 2.1/2” UNF	01821100
122	Washer 5/16” T4 HP	08819700
123	Spacer	31322200
124	Nut Nyloc 5/16”	04827500
125	Bolt 5/16” x 1.3/4” UNF	01820800
126	Forward Reverse Rod	327361400
127	Trunnion	183017301
128	Nut Nyloc M8	04920100

A20/50H TRACTOR
HAND CLUTCH/BRAKE CONTROL MODEL
RUNNING BOARD
& REAR BODY ASSEMBLIES

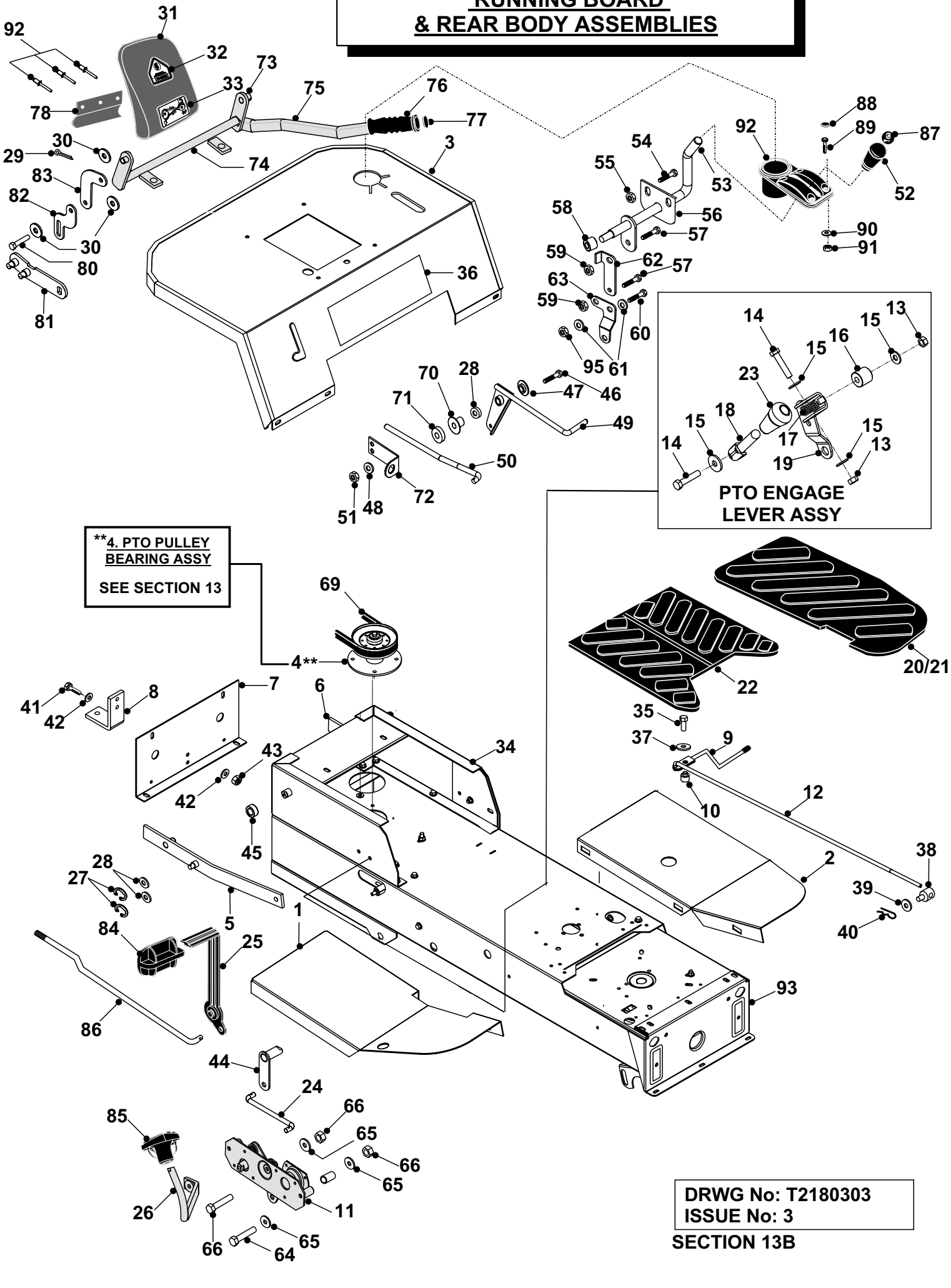

A20/50H HAND CONTROL MODEL
RUNNING BOARD
& REAR BODY ASSEMBLIES
PARTS LIST

	PART DESCRIPTION	PART NUMBER
1	Running Board R/H	321122500
	Running Board R/H (for Germany)	327010100
2	Running Board L/H	321122400
	Running Board L/H (for Germany)	327010000
3	Rear Body Panel	328954600
4	5” PTO Pulley Bearing	208000400
5	Sweeper Lift Arm R/H	32720300
6	Sweeper Lift Arm L/H	32721100
7	Rear Chassis Panel	301041600
8	Tow Bracket	29200101
9	Deck Tension Lever	321122800
10	Deck Tension Lever Boss	18317000
11	Transmission Cassette	405006000
12	Deck Tension Rod	31805601
13	Nyloc Nut 5/16” UNF	04827500
14	Screw 5/16” UNF x 1”	01820700
15	Washer 5/16” x 1”	08819800
16	Sweeper Internal Roller Spacer	31329201
17	Compression Spring Universal	25831100
18	PTO Engage Lever	32708700
19	PTO Lever Plate	30134501
20	Foot Mat R/H	148008800
21	Foot Mat R/H (German Model)	148008600
21	Foot Mat L/H	148008900
22	Centre Mat	14800800
23	Lever Knob	14804800
24	Forward / Reverse Cassette Rod	313018900
25	Forward Pedal	321123900
26	Reverse Pedal	321124000
27	E-Clip M12	078000800
28	Washer 1/2” x 1”	08822500
29	Rue Clip	06849100
30	Washer 5/16” T4	08819700
31	PTO Flap	149496400
32	PTO Danger Decal	35804600

33	Sweeper Belt Decal	35809400
34	Rear Seat Box	327010400
36	Decal (A20/50 Mulcher)	35945900
38	Trunnion	18805500
39	Washer M8	08820100
40	Rue Clip	11836700
41	Bolt M10	01915300
42	Washer M10	088001300
43	Nut M10	04872100
44	Link Rod	327022200
45	Sweeper Lift Bar Spacer	31323500
46	Bolt 5/16” x 2” UNF	01820900
47	Pivot Spacer	31306100
48	Washer 5/16”	08819700
49	Pedal Plate	321122200
50	Diff. Lock Control Rod	313010400
51	Nut 5/16” Nyloc	04827500
52	Hand Brake Knob	187085300
53	Park Brake Lever	327022101
54	Bolt M6 x 20mm	018000300
55	Nut M6	04920500
56	Park Brake Lever Support Plate	301119100
57	Bolt M8 x 30mm	018001200
58	Park Brake Lever Spacer	183018700
59	Nut M8	04850600
60	Bolt M8 x 50mm	018001800
61	Washer 25mm	028001800
62	Park Brake Upper Link Plate	301120100
63	Park Brake Lower Link Plate	301120200
64	Bolt ¼” x 3” UNF	028662400
65	Washer 5/8”	08822700
66	Bolt ¼” x 2” UNF	01857700
67	Nut Nyloc ¼”	04819400
68	Spacer	31322200
69	Dayco Belt A49	22923400
70	Jockey Plate Pivot	31329000
71	Bridge Spacer	31326100
72	Park Brake Switch Bracket	307190600

73	Cross Shaft Link Plate	327181300
74	Sweeper Lift Handle Tube	327181000
75	Sweeper Lift Handle	327181200
76	Soft Foam Grip	38926500
77	Soft Foam End Plug	14880500
78	PTO Flap Hinge	149496500
79	Pop Rivet 4.8 x 10mm	12824400
80	Bolt 5/16" x ¾"	02827600
81	Sweeper Lift Link L/H Sweeper Lift Link R/H	328954500 328954400
82	Sweeper Lift Lower Link	307189900
83	Sweeper Lift Upper Link	307190000
84	Forward Pedal Rubber	148013700
85	Reverse Pedal Rubber	148013800
86	Forward Reverse Rod	313004800
87	Hand Brake Handle Self Adhesive Badge	359505100
88	M6 Socket Screw Cap	148014300
89	Screw M6 x 20mm	018000100
90	Washer M6	088000300
91	Nut Nyloc M6	048001000
92	Handbrake Cup Holder	148013900
93	Chassis	327023301

A20/50TRACTOR
POWERED GRASS COLLECTOR

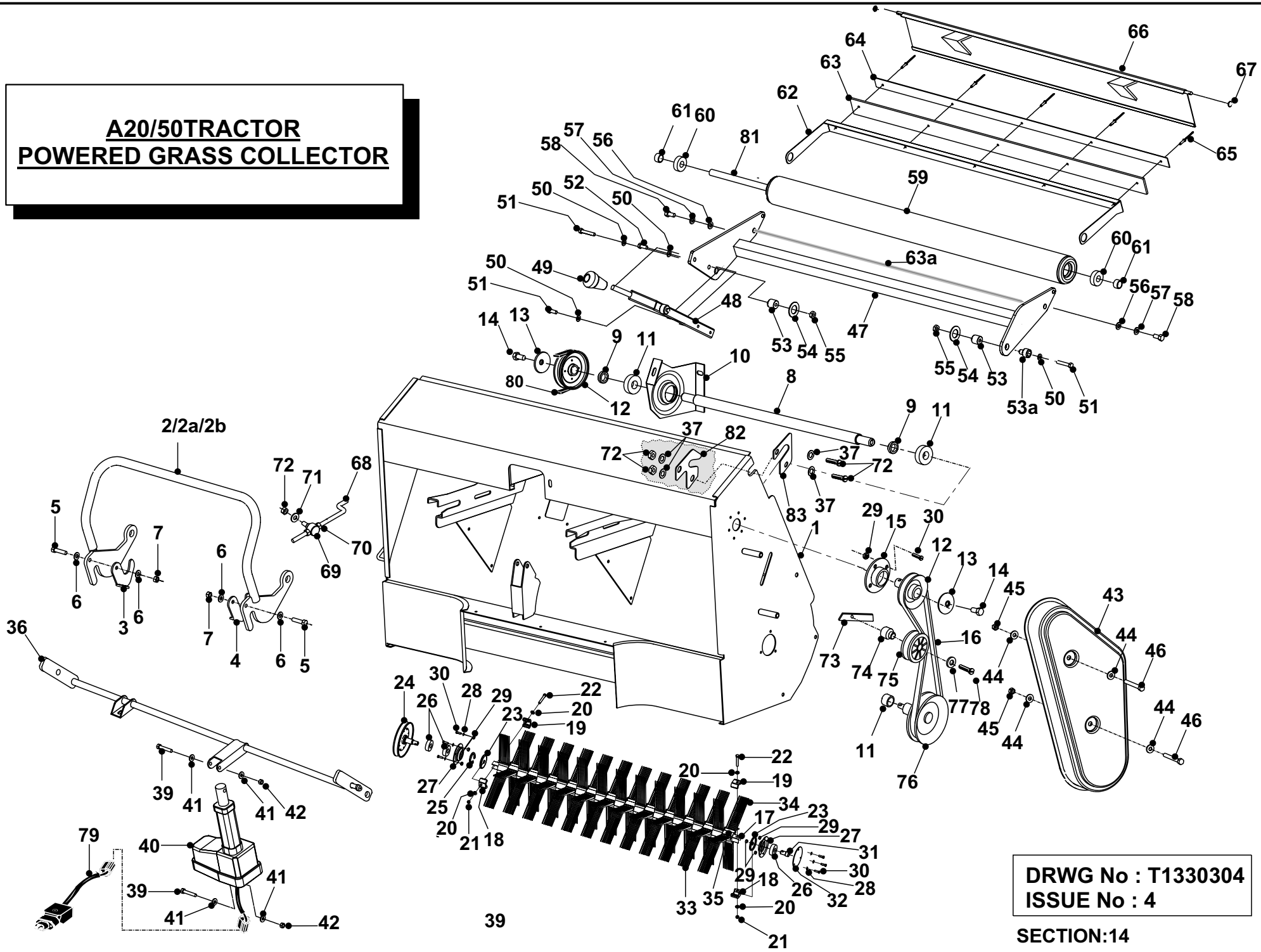

DRWG No : T1330304
ISSUE No : 4

SECTION:14

	PART DESCRIPTION	PART NUMBER
1	Sweeper Body (from serial no 0103…)	327172100
	Sweeper Body (from July 2003)	328955700
2	Sweeper Locking Lever	32733100
	Sweeper Locking Lever (from serial no 0103…)	178966300
2a	Sweeper Locking Plate (from serial no 0103…)	307024500
2b	Handle Grip (not illustrated)(from serial no 0103…)	149496600
3	PGC Lever Lock L/H	30149800
4	PGC Lever LockR/H	30150300
5	Bolt 1/4” x 1” UNF	01844700
6	Washer 1/4” T3 LP	08827800
7	M6 Nyloc Nut	048001000
8	Idler Shaft	183009800
9	Spacer Plated	48306200
10	Carrier Bearing	301043800
11	Bearing 6203	10811600
12	3” Pulley	32727600
13	Dome Washer	08819900
14	Bolt 3/8” x 3/4” Lg	02874500
15	Bearing Housing 17mm	27106600
16	Belt - PTO Brush Drive (A38 Super 2)	22950300
17	Sweeper Brush Stock	174004401
18	Brush Drive Moulding Bottom (Large)	14832900
19	Brush Drive Moulding Top (Small)	14834100
20	Washer 1/4” T3 LP	08827800
21	Nyloc Nut M6	048001000
22	Bolt M6 x 45mm	028662800
23	Sweeper Slinger	321321800
24	5” Brush Stock Pulley	327002600
25	Circlip 17mm	07914800
26	Bearing 6203	10811600
27	Bearing Housing 17mm	27106600
28	Washer M5	08911500
29	Nyloc Nut M5	04885900
30	Pan Head Screw M5 x 16mm	02940500
31	Brush Stock Spindle Short	31323900
32	Sweeper Bearing Cap	30117500
33	Sweeper Bristle (Standard)	14898100
34	Sweeper Bristle (Webbed)	14936300
35	Bristle Boss	14833000
36	Cross Shaft	327362200
37	Washer M8	08819500

38	Lift Arm	327010800
39	Bolt 5/16” UNF x 1.75” Lg	01820800
40	Actuator Collector Net	448002800
41	Washer 5/16”	08819700
42	Nyloc Nut 5/16” UNF	04827500
43	Plastic Pulley Cover	14848600
44	Washer 5/16”	08819700
45	Nyloc Nut 5/16” UNF	04827500
46	Bolt 5/16” UNF x 2.1/2” Lg	01821100
47	Roller Housing	327010700
	Roller Housing (from serial no 0103…)	327172401
48	Brush Height Lever	32713800
	Brush Height Lever (from serial no 0103…)	327171800
49	Lever Knob	14804800
50	Washer 5/16”	08819700
51	Bolt M8 x 20 Lg	02825900
52	Bolt 5/16” UNF x 1.3/4” Lg	01820800
53	Roller Plate Bush	31329200
53a	Pivot Boss	31306100
54	Scraper Bar Washer	089418100
55	Nyloc Nut 5/16” UNF	04827500
56	Washer 3/8”	08820100
57	Shakeproof Washer	08826700
58	Bolt 3/8” UNF x 3/4” Lg	01874500
59	Roller Tube	327010600
60	Bearing 6203	10811600
61	Tubular Spacer	174003600
62	Roller Scraper Bar	301044700
63	Roller Scraper Rubber	148004300
63a	Roller Scraper Cable	528004301
64	Roller Scraper Plate	301044800
	Roller Scraper Plate (from serial no 0103…)	327172200
65	Pop Rivets	12847900
66	Scraper Flap Plate	327013600
	Scraper Flap Plate (from serial no 0103…)	327012100
67	D - Clip	14885000
68	Belt Tension Rod	313003500
69	Belt Tension Trunnion	183003800
70	Nut M8	04822300
71	Washer 5/16”	08819700
72	Nyloc Nut M8	04850600
73	Belt Tension Plate	30121900
74	Sweeper Jockey Spacer	31350400

75	Jockey Pulley	20811500
76	5” Pulley	327002600
77	Sweeper Jockey Cap Boss	31351100
78	Bolt 5/16” UNF x 2”	01820900
79	Net Emptying Actuator Loom	448004800
80	P.T.O. Belt A49 Dayco Super 2	228001200
81	Roller Shaft	183010000
82	Inner Shaft Locking Plate	307191400
83	Outer Shaft Locking Plate	307191500
84	Bolt M8 x 25mm	02826000

A,D & K SERIES
POWERED GRASS COLLECTOR NET

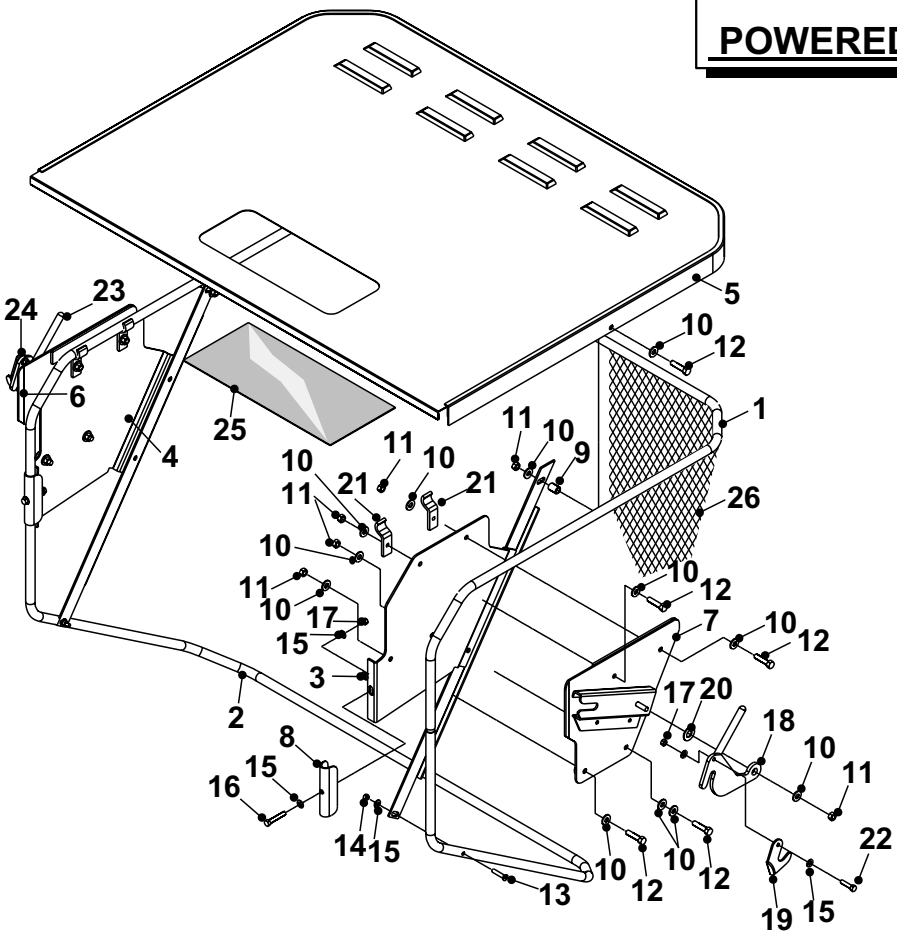

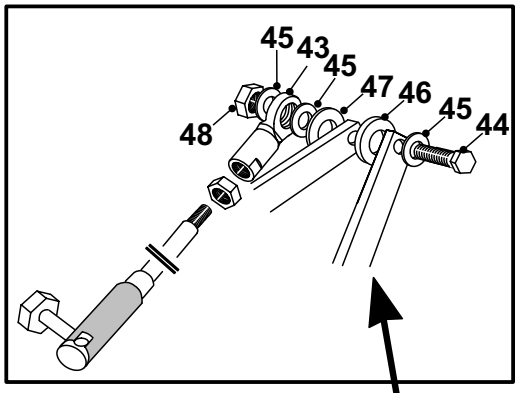

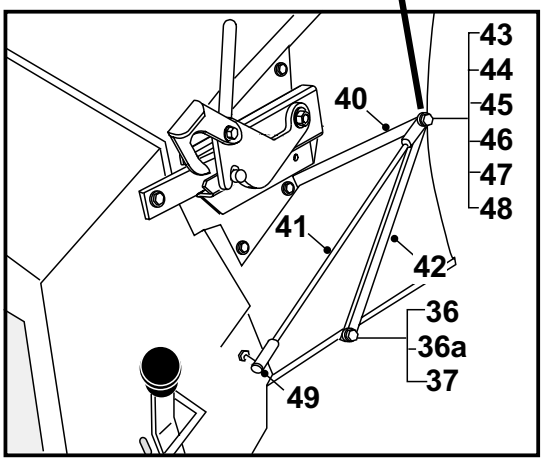

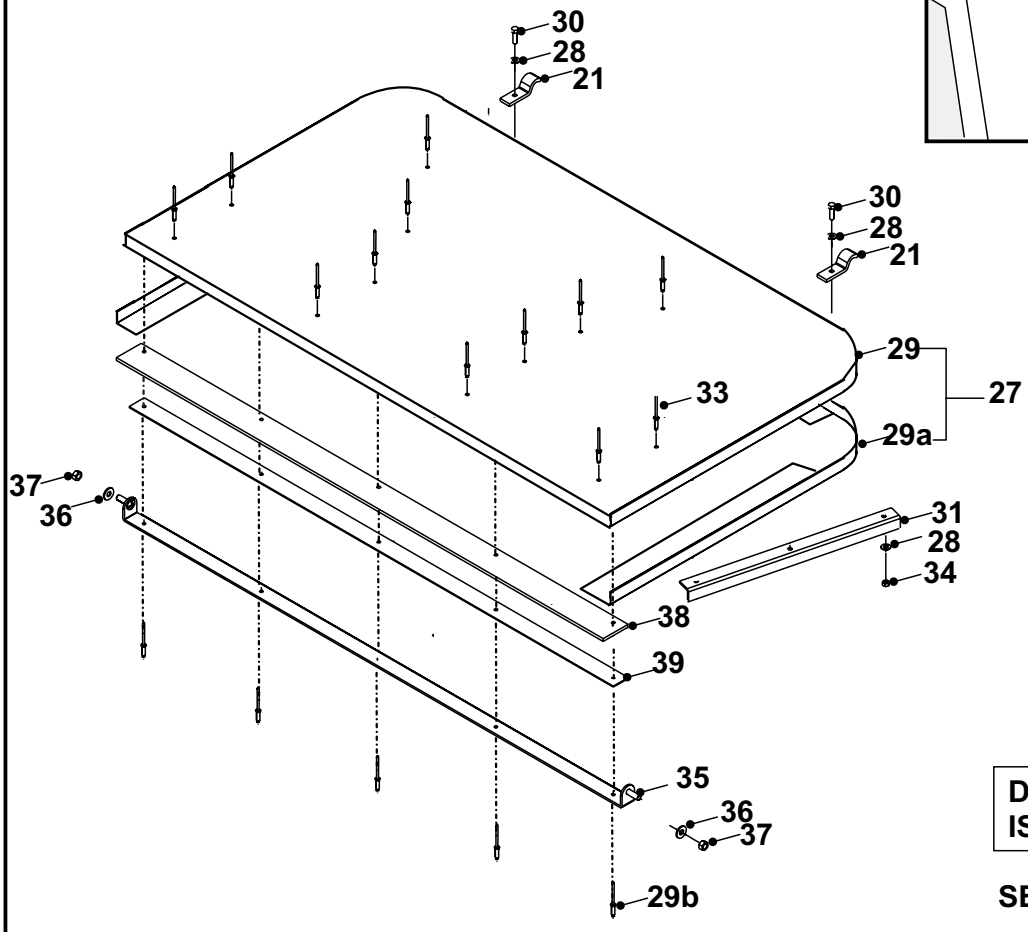

DRWG No: T1320005
ISSUE No: 5

SECTION:15

A & D SERIES POWERED GRASS COLLECTOR NET

	PART DESCRIPTION	PART NUMBER
1	Upper Bag Frame	174004600
2	Lower Bag Frame	178966600
3	Goal Post L/H	301133600
4	Goal Post R/H	301133700
5	Collector Lid	327011700
6	Bag Ear R/H	327178100
7	Bag Ear L/H	327178000
8	Bag Frame Clamp	30149600
9	Spacer	183003300
10	Washer 5/16”	08819700
11	Nyloc Nut 5/16” UNF	04827500
12	Bolt 5/16” UNF x 1.1/4”	01820600
13	Allen Screw M6 x 30mm	028000100
14	Nyloc Nut M6	04920500
15	Washer 1/4”	08827800
16	Bolt 1/4” UNF x 1.1/2”	01820500
17	Nyloc Nut 1/4” UNF	04819400
18	Hand Lock Lever L/H	27707701
19	Locking Lug L/H	30149800
20	Nylon Washer 1” x 1/2” x 1.6g	08850500
21	Frame Tube Clamp	301008400
22	Bolt 1/4” UNF x 1”	01844700
23	Lock Lever R/H	27707801
24	Locking Log R/H	30150300
25	Window	14871500
26	Collector Net	388000200
27	Galvanised Floor	301045200
28	Washer 1/4”	08827800
29	Floor	307025400
29a	Floor Trim	307025100
29b	Steel Rivet 4.8 x 6	12949401
30	Bolt M6 x 20mm	018000300
31	Floor Support Angle	301046500
32	Nyloc Nut M6	04920500
33	Pop Rivet	12847900
35	Floor Support	327011100
36	Washer 5/16”	08819700
36a	Spacer 5/16”	18302700
37	Nyloc Nut M8	04850600
38	Floor Rubber	148004400
39	Rubber Fixing Strip	301045400
40	Link Arm Upper	301122800
41	Link Arm Support	183010402

A & D SERIES POWERED GRASS COLLECTOR NET

42	Link Arm Lower	301123000
43	Rod End 10mm	10872600
44	Bolt 3/8” x 1.3/4”	01857500
45	Washer 3/8” T3	08820100
46	Nylon Washer	08850500
47	Washer 3/8” x 7/8”	08822800
48	Nyloc Nut 3/8”	04820200
49	Ball End Shaft 10mm	183010200

A20/50 TRACTOR 42" HIGH GRASS MULCHER DECK

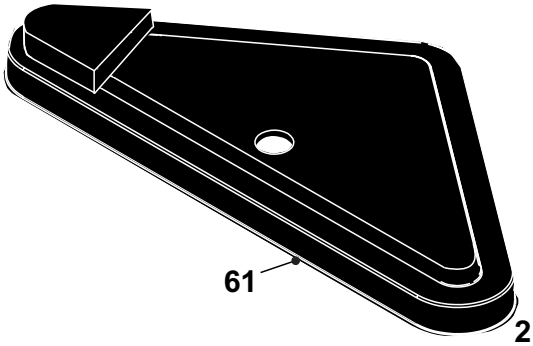

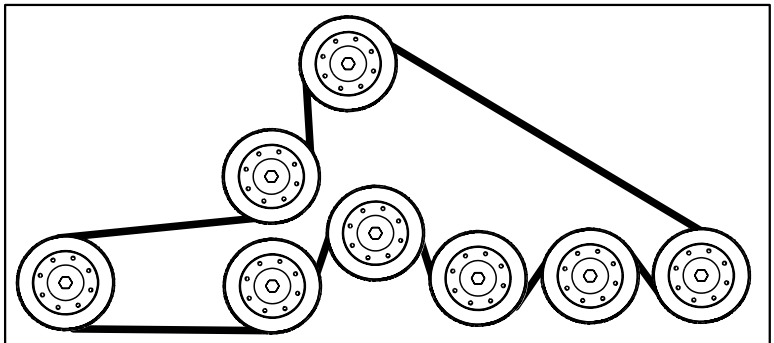

42" HIGH GRASS MULCHER DECK DRIVE BELT PATH

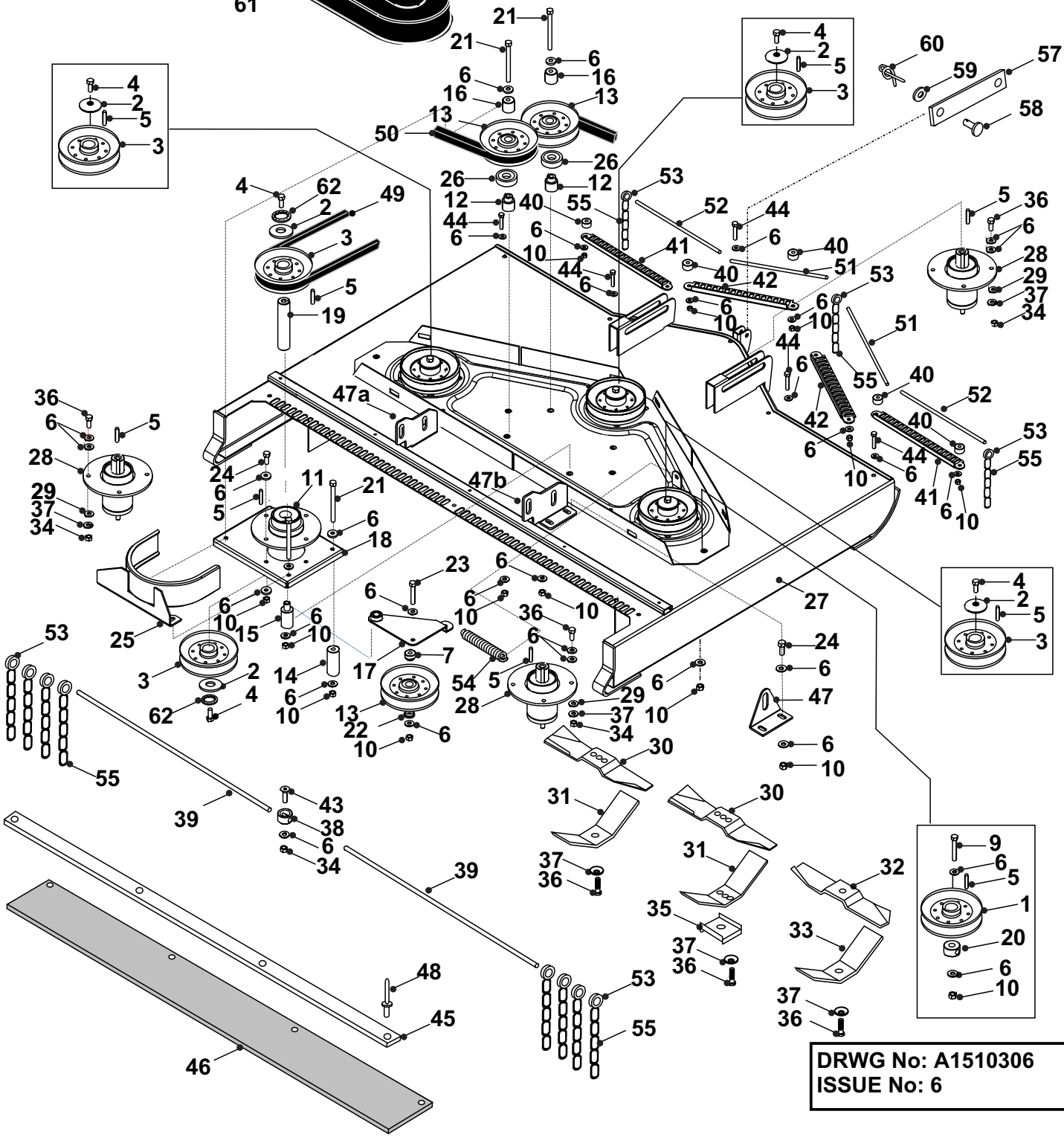

DRWG No: A1510306
ISSUE No: 6

A20//50 TRACTOR
42" HIGH GRASS MULCHER DECK PARTS LIST

	PART DESCRIPTION	PART NUMBER
1	Deck Idler Pulley	20869600
2	Washer M10 x 40 x 3 mm	08824600
3	Deck Pulley Internal	20869600
4	Bolt M8 x 20mm	02825900
5	Key ¼" sq x 1.1/4"	09853401
6	Washer 5/16"	08819700
7	Jockey Wheel Spacer	18831600
8	Deck Engage Spring Stop	31320400
9	Bolt 5/16" x 2"	01820900
10	Nut Nyloc 5/16" UNF	04827500
11	Platform Bearing Housing	405005000
12	Support / Idler Pulley Boss	183021600
13	Idler Pulley 5"	20869502
14	Bearing Support Plate	183021900
15	Support / Jockey Pulley Pivot	183021800
16	Support / Jockey Pulley Spacer	183021700
17	Jockey Plate Welded	327176700
18	Central Platform	301130100
19	Central Drive Shaft 113mm	183012400
20	Engage Spring Stop	31320400
21	Bolt 5/16" x 3.1/2" HT	01854700
22	Jockey Cap Boss	31351100
23	Bolt 5/16" UNF x 1.3/4"	01820800
24	Set Screw 5/16" x ¾" UNF	02827600
25	Belt Guard	327176500
26	Bearing NTN 6203 LLU	10811600
27	Deck Welded	327176600
28	Short Shaft Bearing Housing With Studs	40503603
29	M/Screw 5/16" x 1" UNF	02819600
30	R/H Blade (AC) (Echo – Pt.No 0004)	16000500
31	L/H "V" Blade (AC) (Echo)	16000200
32	R/H Blade (C/W) (Echo – Pt.No 0005)	16000400
33	R/H "V" Blade (CW) (Echo)	16000100
34	Nut M8	04850600
35	Locking Tab	27111200
36	Bolt 3/8" x 1.1/4"	02825300
37	Washer Shakeproof 3/8"	08826700
38	Chain Rod Support Spacer	183022300

A20/50 TRACTOR
42" HIGH GRASS MULCHER DECK PARTS LIST

39	Chain Rod 5/16" x 534mm	301123500
40	Front Chain Rod Spacer	183022700
41	Chain Plate Large	307018900
42	Chain Plate Small	307019000
43	Cap Screw M8 x 20cs	028001900
44	Bolt 5/16" x 1.1/2" UNF	01820700
45	Rear Rubber Flap Fixing Strip	307020100
46	Rear Rubber Flap	148008400
47a	Rear Universal Deck Hanging Bracket L/H	307186800
47b	Rear Universal Deck Hanging Bracket R/H	307186900
48	Pop Rivet (Steel) 4.8 x 16	12860100
49	Deck Drive Belt B52	229503200
50	Internal Deck Belt AA96	229503100
51	Chain Rod 5/16" x 233mm	301123300
52	Chain Rod 5/16" x 279mm	301123400
53	Chain Rod Spacer	183011900
54	Deck Belt Tension Spring	25906200
55	Chain	238000300
56	Field Grass Mulcher Decal (42") 107cm (location rear deck)	358009600
57	Deck Tension Bar	29203700
58	Deck Push Rod Pin	31338200
59	Washer 3/8" T3 HP	08820100
60	Rue Clip	11836700
61	Deck Lid Cover 42"	148002400
62	Shakeproof Washer M10	088002100