Parts Manual

Mfg. No: 28Q777-0151-01

Copyright © Briggs and Stratton. All Rights reserved

15-Aug-2019

Model Components

	Page
Air Filter, Mufflers	4
Alternator, Wires, Magneto	8
Blower Housings, Label and Emissions Labels, Controls, Fuel Pump, Springs	10
Crankshaft, Sump, Cylinder, Piston/Rings, Connecting Rod	14
Cylinder Head, Rocker Cover, Oil Pump, Oil Filter	20
Electric Starter	24
Flywheel, Ring Gear, Screens	28
Replacement Engine	30
Walbro and Nikki Carburetors	31

Not For Reproduction

Copyright © Briggs and Stratton. All Rights reserved

Mfg. No: 28Q777-0151-01

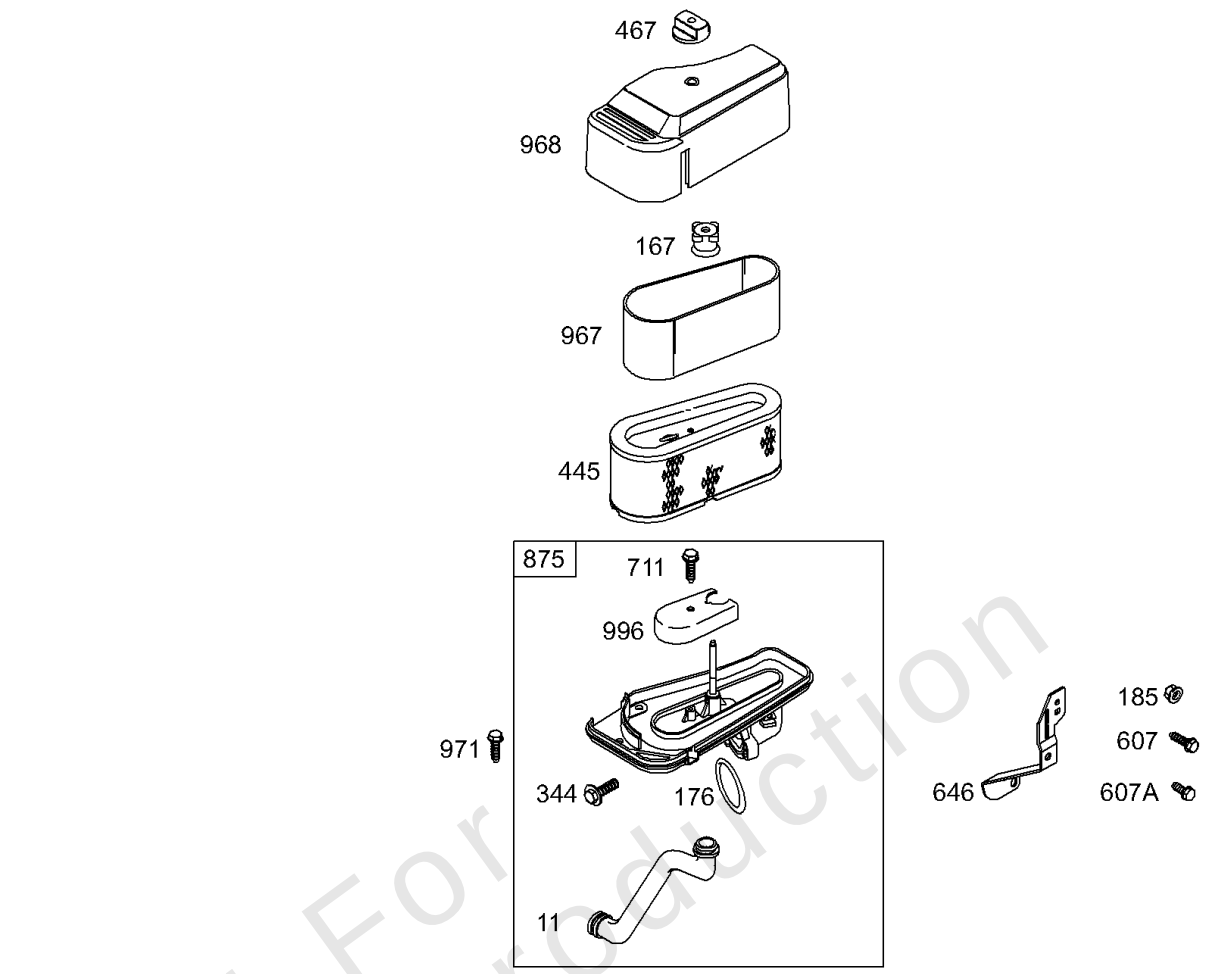

Not For Reproduction

Copyright © Briggs and Stratton. All Rights reserved

Air Filter, Mufflers

REF NO	PART NO	QTY	DESCRIPTION
11	691328		TUBE, Breather
81	691178		LOCK, Muffler Screw
167	692297		SEAL, Air Cleaner Nut
176	691917		SEAL, O-Ring -(Air Cleaner Base)
185	690958		NUT -(Air Cleaner Base)
300	690850		MUFFLER
300A	496022S		MUFFLER
344	693675		SCREW -(Cable Clamp)
346	690661		SCREW -(Spark Arrestor)
445	496894S		FILTER, A/C Cartridge
467	691668		KNOB, Air Cleaner Cover
607	690703		SCREW -(Air Cleaner Brace)
607A	691693		SCREW -(Air Cleaner Brace)
613	691416		SCREW -(Muffler)
613A	691678		SCREW -(Muffler)
613B	692198		SCREW -(Muffler)
646	690460		BRACE, Air Cleanr
676	396903		DEFLECTOR, Muffler
676A	393761		DEFLECTOR, Muffler -(Side Outlet)
677	690661		SCREW -(Muffler Deflector)
711	690703		SCREW -(Carburetor Shield)
725	690420		SHIELD, Heat
819	690297		SCREW -(Muffler Bracket)
819A	691678		SCREW -(Muffler Bracket)
819B	691676		SCREW -(Muffler Bracket)
823	698941		SCREW -(Muffler Adapter)
863	691204		BRACKET, Muffler
863A	691205		BRACKET, Muffler
864	496750		ADAPTER, Muffler
875	696129		BASE, Air Cleaner -(Plastic)
883	692236		GASKET, Exhaust
884	690853		CLAMP, Muffler
967	272403S		FILTER, Pre Cleaner
968	692355		COVER, Air Cleaner
971	690810		SCREW -(Air Cleaner Base to Carburetor) -Used Before Code Date 97100600
971	692129		SCREW -(Air Cleaner Base to Carburetor) -Used After Code Date 97100500

Not For Reproduction

Copyright © Briggs and Stratton. All Rights reserved

Mfg. No: 28Q777-0151-01

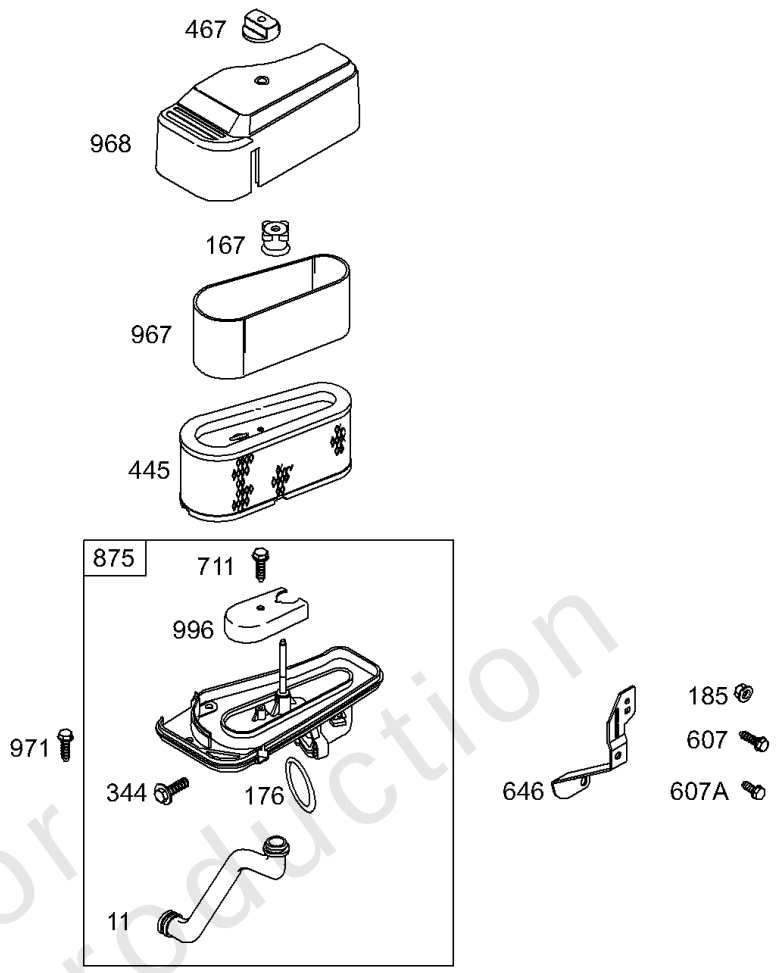

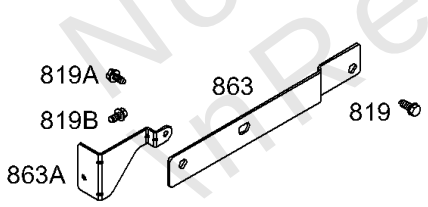

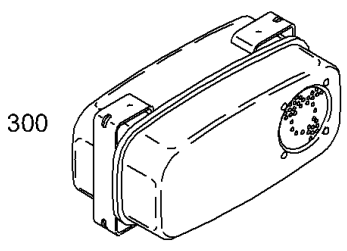

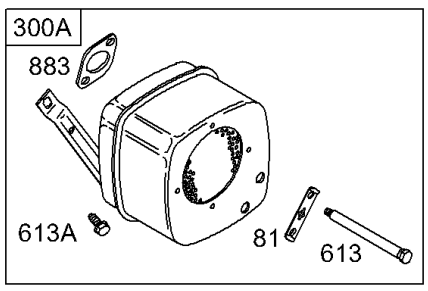

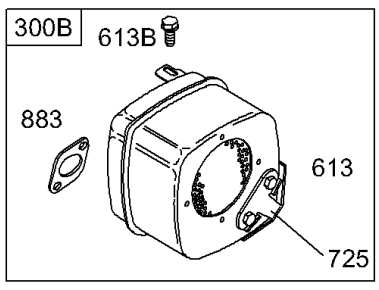

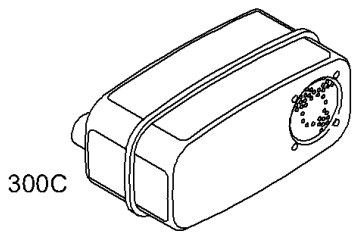

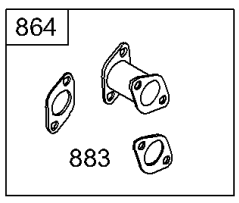

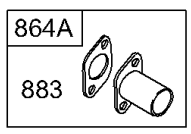

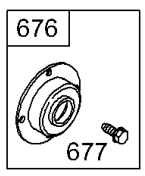

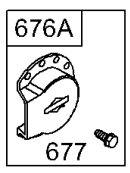

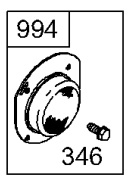

Not For Reproduction

Copyright © Briggs and Stratton. All Rights reserved

Air Filter, Mufflers

REF NO	PART NO	QTY	DESCRIPTION
994	392390		ARRESTOR, Spark
996	690678		SHIELD, Carburetor

Not For\nReproduction

Copyright © Briggs and Stratton. All Rights reserved

Alternator, Wires, Magneto

Mfg. No: 28Q777-0151-01

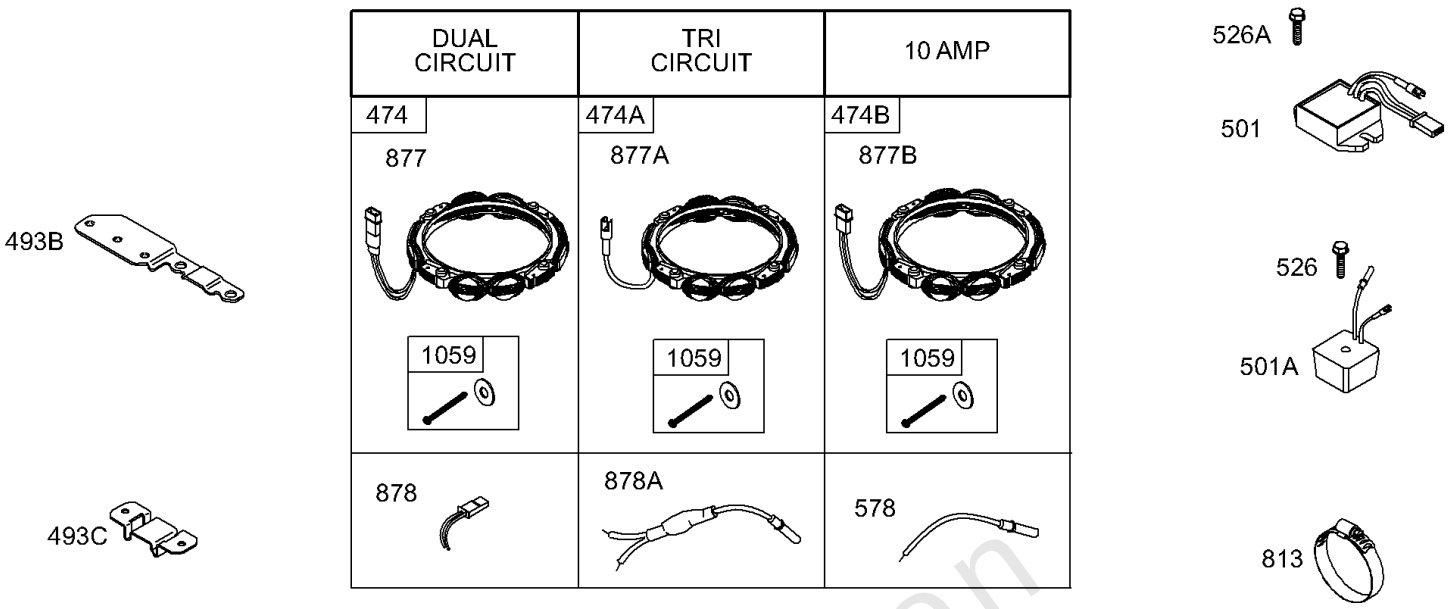

NOTE: ALL OLD STYLE STATORS USE

REFERENCE NUMBER 1119 MOUNTING SCREW

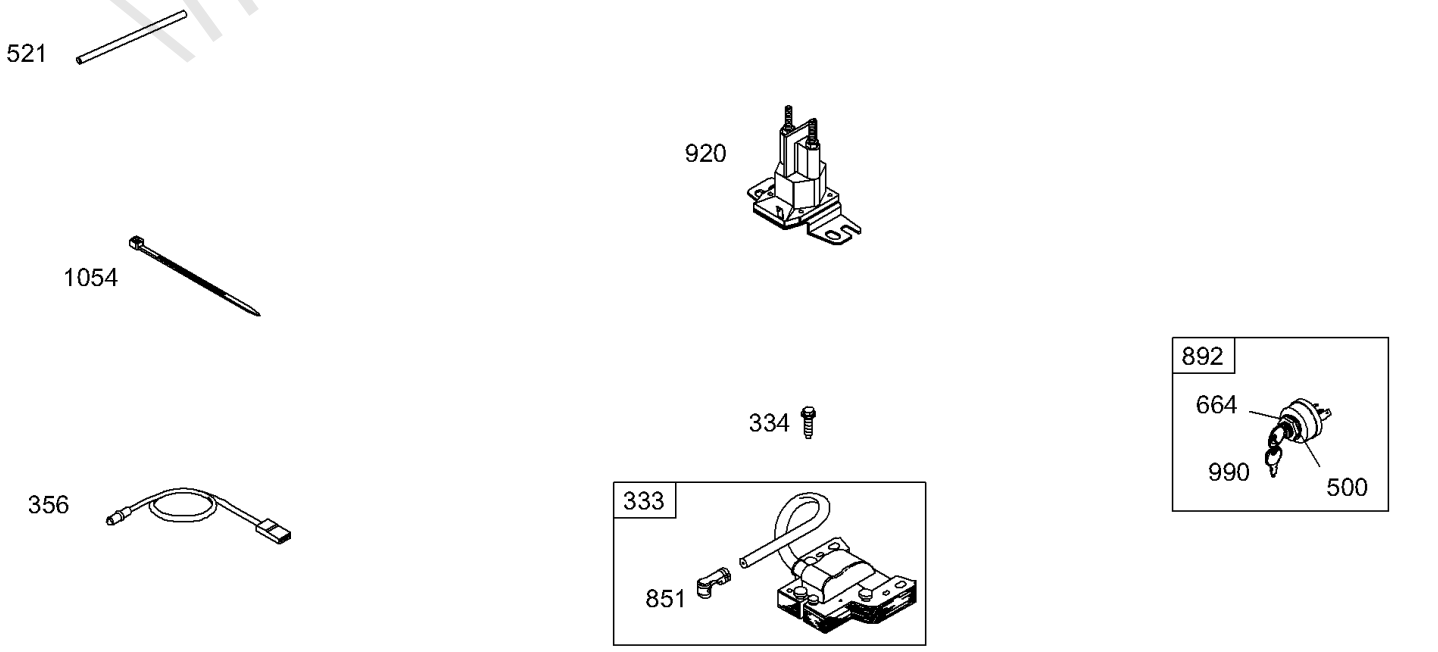

Not For Reproduction

Copyright © Briggs and Stratton. All Rights reserved

Alternator, Wires, Magneto

REF NO	PART NO	QTY	DESCRIPTION
333	492341		ARMATURE, Magneto
334	691061		SCREW -(Magneto Armature)
356	690807		WIRE, Stop
474	696459		ALTERNATOR -(Dual Circuit)
474A	696457		ALTERNATOR -(Tri Circuit)
474B	696458		ALTERNATOR -(10 Amp Regulated)
493B	694475		BRACKET, Mounting
493C	691177		BRACKET, Mounting
500	691086		WASHER -(Key Switch)
501	691185		REGULATOR -(10 and 16 Amp Regulated)
501A	691188		REGULATOR -(5 and 9 Amp Regulated)
521	690581		SHIELD, Cable
526	694476		SCREW -(Regulator) -Used After Code Date 99070500
526	690326		SCREW -(Regulator) -Used Before Code Date 99070600
526A	692598		SCREW -(Regulator)
578	692306		WIRE ASSEMBLY
664	691087		NUT -(Key Switch)
813	690635		CLAMP
851	692424		TERMINAL, Spark Plug
877	393456		WIRE/CONNECTOR, Alternator -(Dual Circuit)
877A	393537		WIRE/CONNECTOR, Alternator -(Tri Circuit)
877B	399916		WIRE/CONNECTOR, Alternator -(10 and 16 Amp Regulated)
878	691237		HARNESS, Alternator
878A	691955		HARNESS, Alternator
892	692318		SWITCH, Key
920	691656		SOLENOID, Starter
990	691959		SET, Key
1054	280275		TIE, Cable
1059	698516		KIT, Screw/Washer
1119	691183		SCREW -(Alternator)

Not For Reproduction

Copyright © Briggs and Stratton. All Rights reserved

Blower Housings, Label and Emissions Labels, Controls, Fuel Pump, Springs

Mfg. No: 28Q777-0151-01

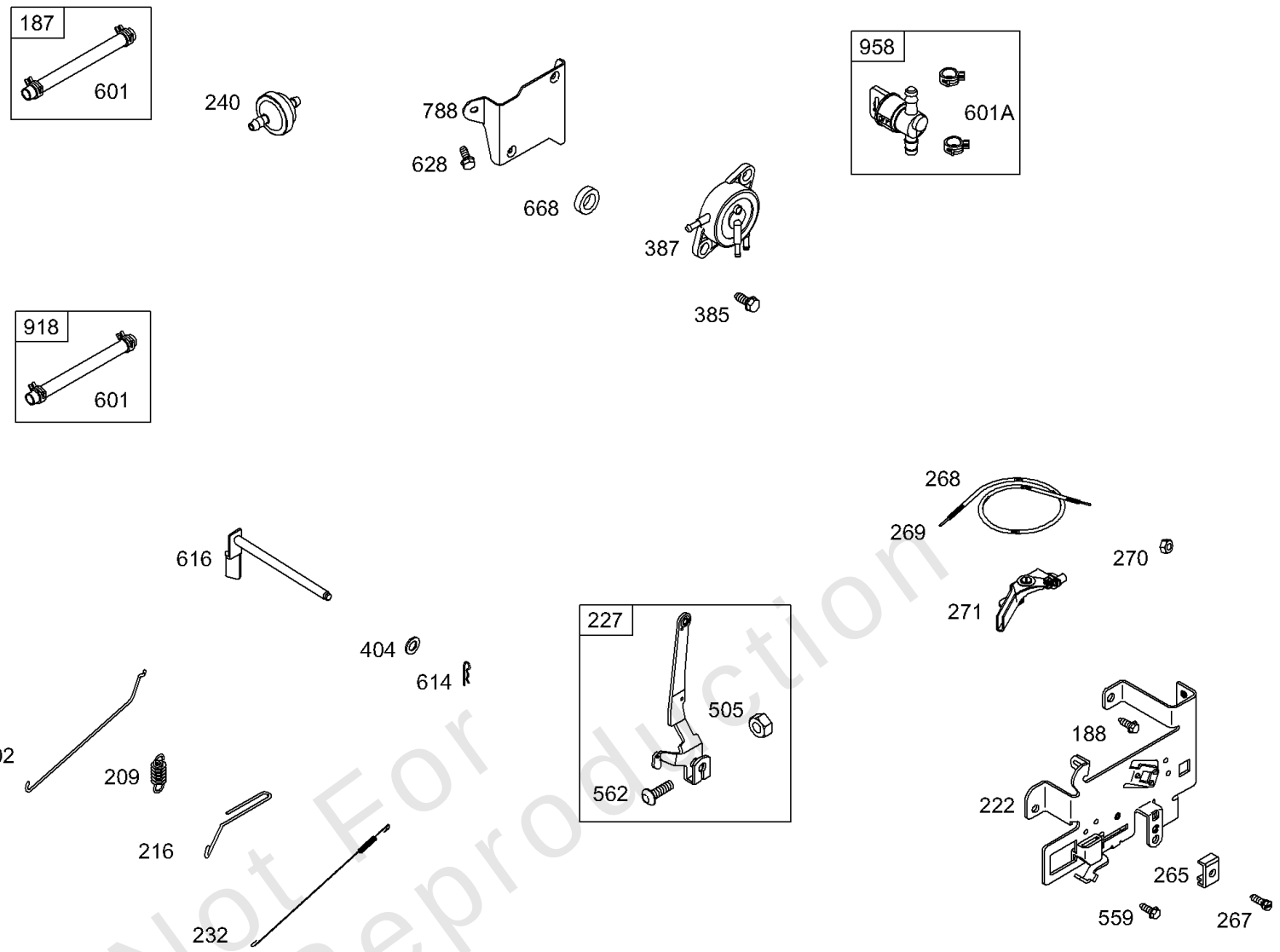

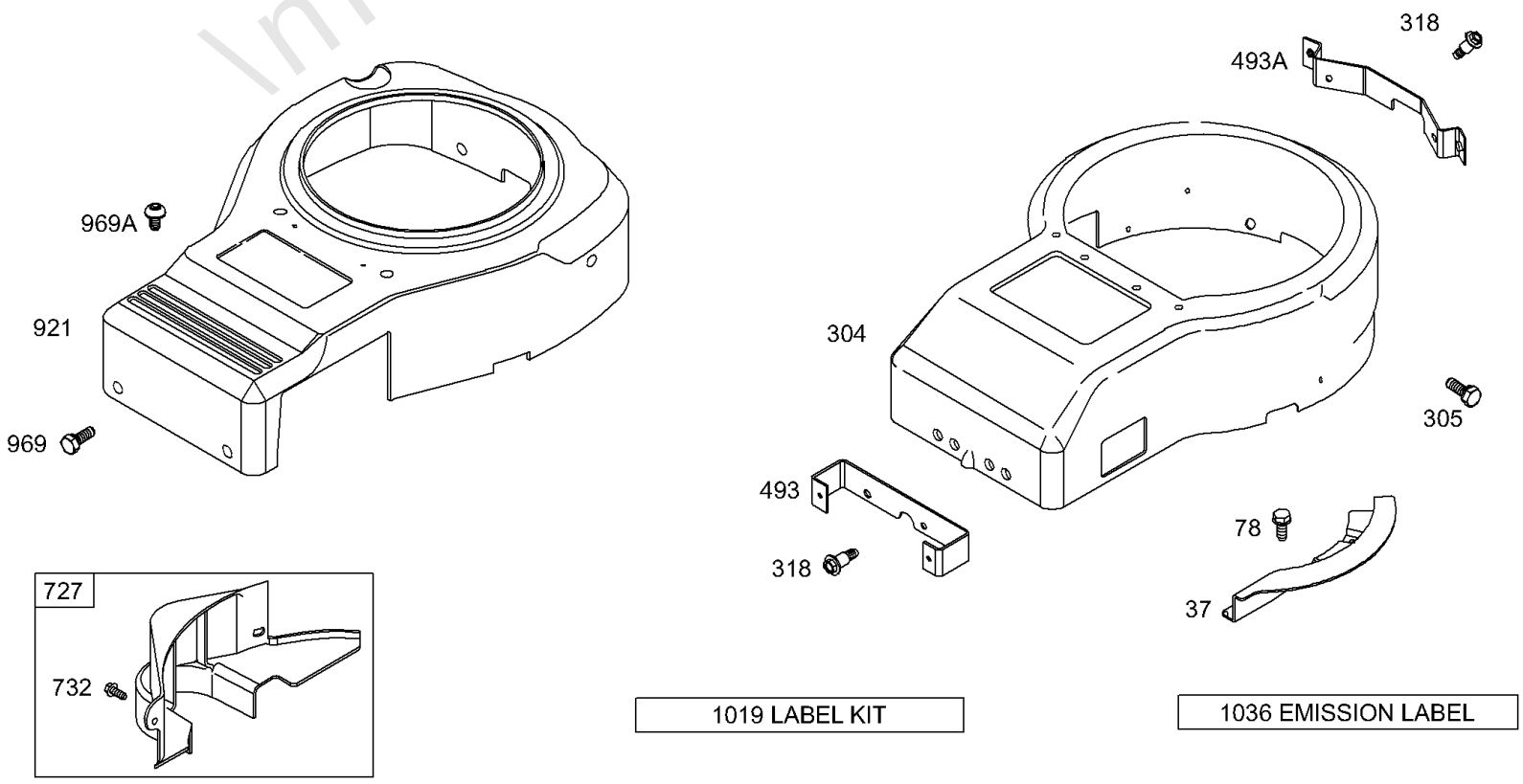

1019 LABEL KIT

1036 EMISSION LABEL

Not For Reproduction

Blower Housings, Label and Emissions Labels, Controls, Fuel Pump, Springs

REF NO	PART NO	QTY	DESCRIPTION
37	690456		GUARD, Flywheel
78	690661		SCREW -(Flywheel Guard)
187	296004		LINE, Fuel -(Cut To Required Length)
188	691693		SCREW -(Control Bracket)
202	691841		LINK, Mechanical Governor
209	692208		SPRING, Governor -(Green)
216	691840		LINK, Choke
222	694042		BRACKET, Control
227	691374		LEVER, Governor Control
232	691842		SPRING, Governor Link
240	394358S		FILTER, Fuel -(White)
240	298090S		FILTER, Fuel -(Red)
265	691024		CLAMP, Casing
267	690804		SCREW -(Casing Clamp)
268	691025		CASING, Control Wire -(Cut To Required Length)
269	691026		WIRE, Control -(Cut To Required Length)
270	691027		NUT -(Control Wire Casing)
271	691028		LEVER, Control
304	690497		HOUSING, Blower
305	691108		SCREW -(Blower Housing)
318	692127		SCREW -(Mounting Bracket)
385	691108		SCREW -(Fuel Pump)
387	808656		PUMP, Fuel
404	691691		WASHER -(Governor Crank)
493	690493		BRACKET, Mounting -(Front)
493A	690494		BRACKET, Mounting -(Rear)
505	691251		NUT -(Governor Control Lever)
559	690661		SCREW -(Remote Choke Stop)
562	691119		BOLT -(Governor Control Lever)
601	95162S		CLAMP, Hose
601A	691038		CLAMP, Hose -(Black)
614	691620		PIN, Cotter
616	692012		CRANK, Governor
628	690661		SCREW -(Fuel Pump Bracket)
668	690510		SPACER -(Fuel Pump)
727	490324		COVER, Starter Drive -(Includes Mounting Hardware)

Not For Reproduction

Copyright © Briggs and Stratton. All Rights reserved

Blower Housings, Label and Emissions Labels, Controls, Fuel Pump, Springs

Mfg. No: 28Q777-0151-01

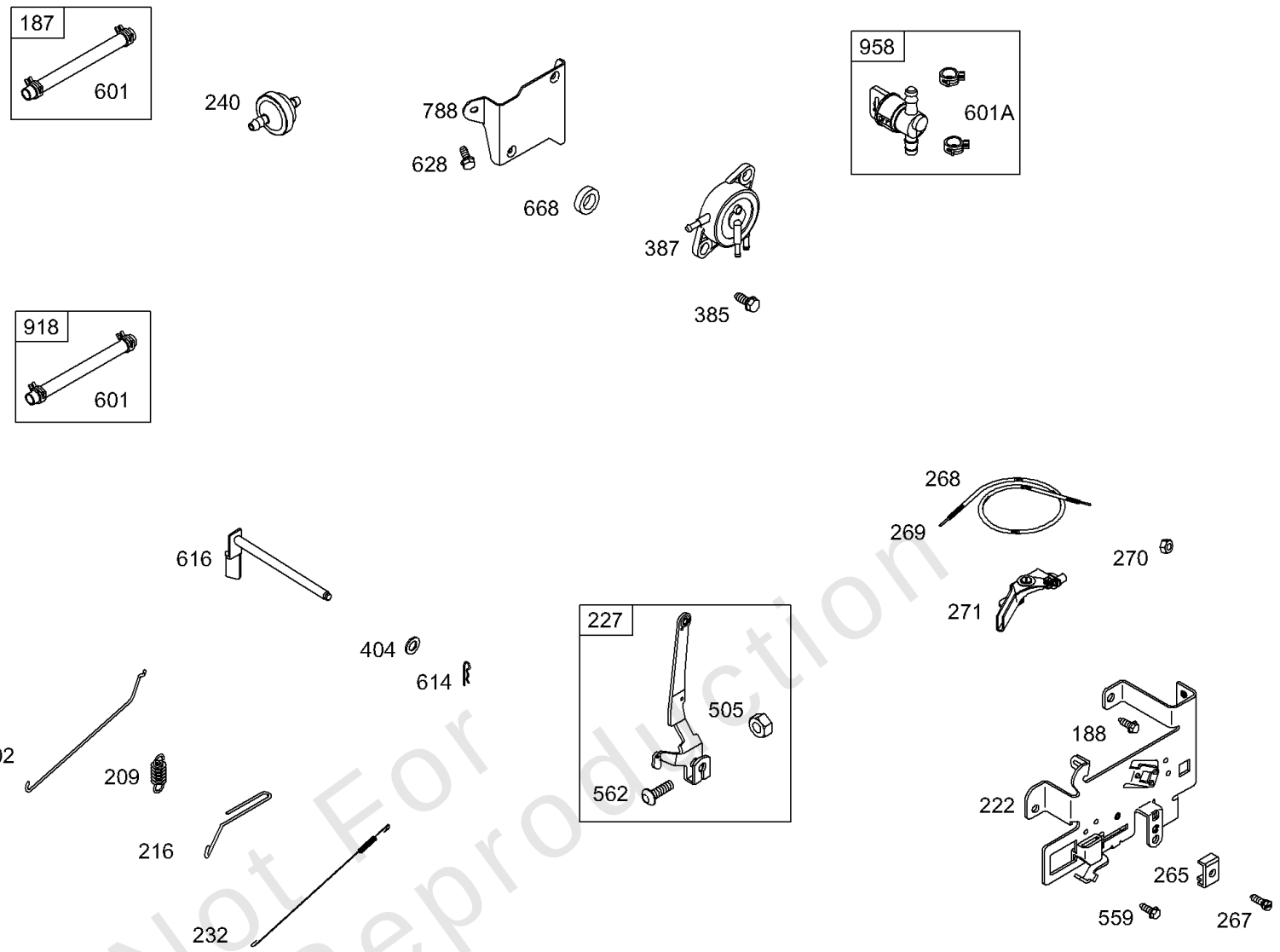

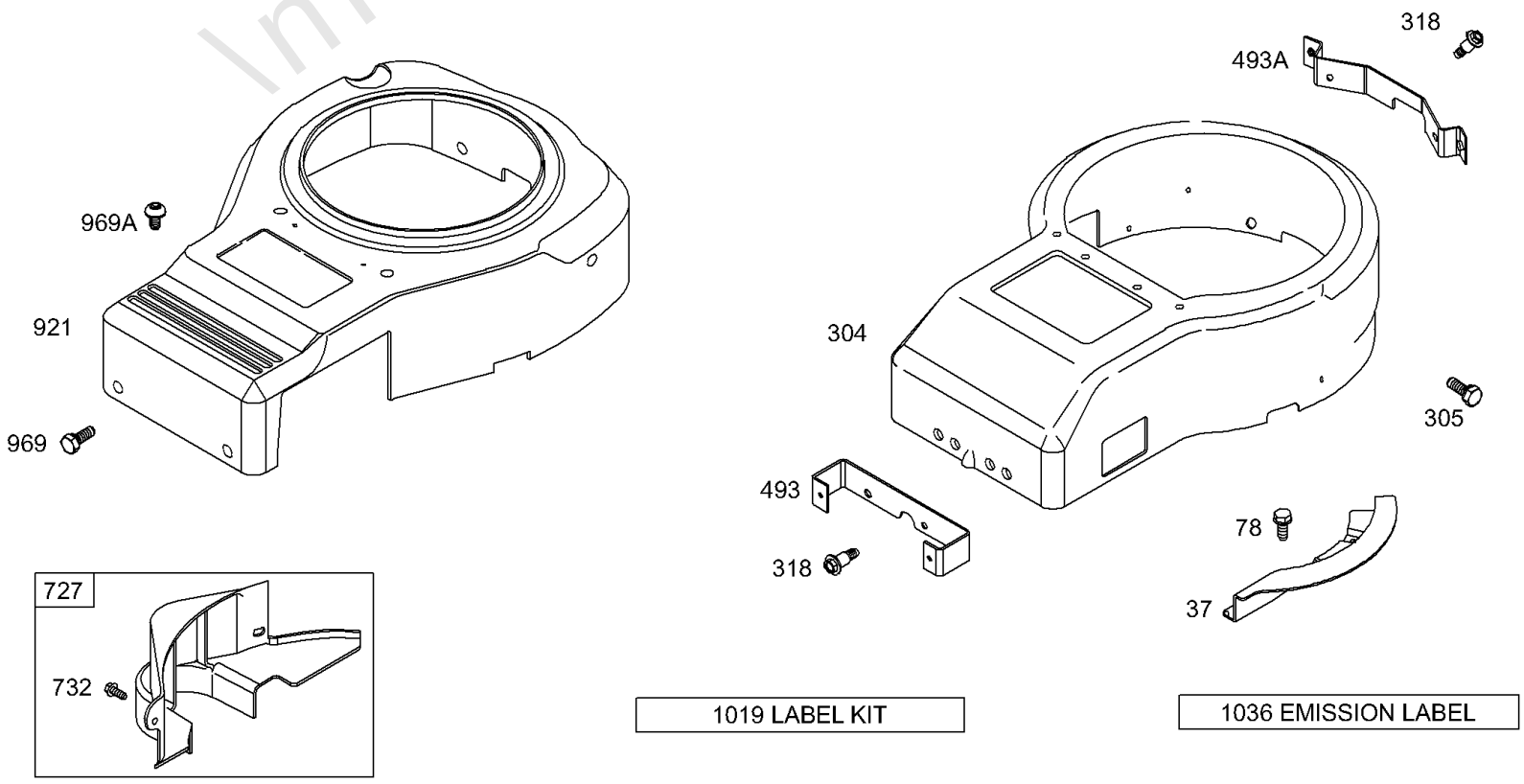

1019 LABEL KIT

1036 EMISSION LABEL

Not For Reproduction

Blower Housings, Label and Emissions Labels, Controls, Fuel Pump, Springs

REF NO	PART NO	QTY	DESCRIPTION
732	691002		SCREW -(Starter Drive Cover)
788	692133		BRACKET, Fuel Pump
918	393815		HOSE, Vacuum -(Cylinder To Impulse Pump)(Cut To Required Length)
921	690496		HOUSING, Blower -(Black)
921	690495		HOUSING, Blower -(Red)
958	698183		VALVE, Fuel Shut Off -(Plastic)
969	690365		SCREW -(Blower Housing)
969A	691108		SCREW -(Blower Housing Cover)
1019	496758		KIT, Label
1036	499363		LABEL, Emissions -Used Before Code Date 97052600
1036	499364		LABEL, Emissions -Used After Code Date 97052500 -Used Before Code Date 99010100
1036	694318		LABEL, Emissions -Used After Code Date 98123100 -Used Before Code Date 99010100
1036	695700		LABEL, Emissions -Used After Code Date 00063000
1036	694997		LABEL, Emissions -Used After Code Date 99093000 -Used Before Code Date 00070100

Not For Reproduction

Copyright © Briggs and Stratton. All Rights reserved

Crankshaft, Sump, Cylinder, Piston/Rings, Connecting Rod

Mfg. No: 28Q777-0151-01

1330 REPAIR MANUAL

1058 OPERATOR'S MANUAL

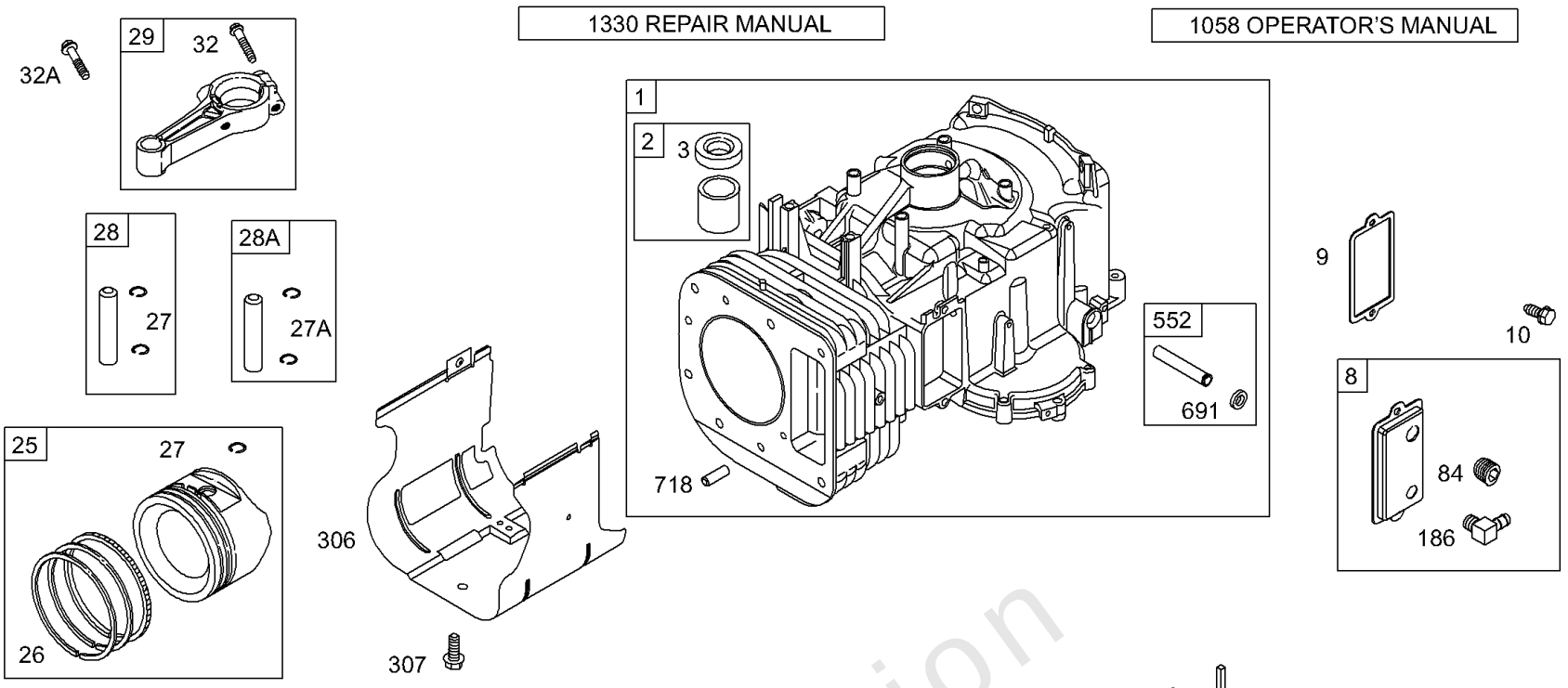

358 ENGINE GASKET KIT

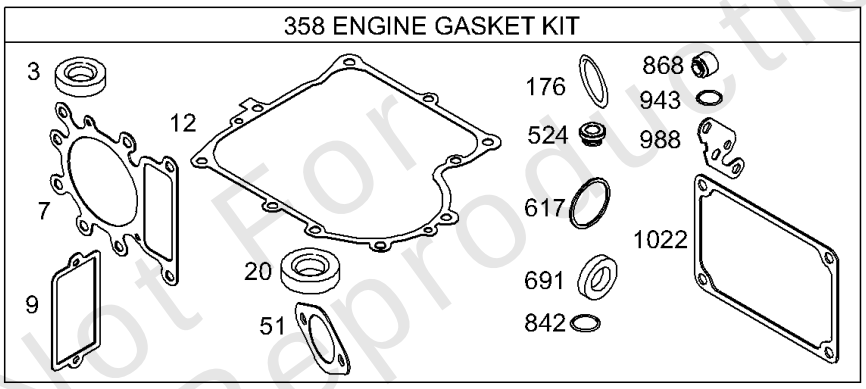

Not For Reproduction

Crankshaft, Sump, Cylinder, Piston/Rings, Connecting Rod

REF NO	PART NO	QTY	DESCRIPTION
1	496412		CYLINDER ASSEMBLY
2	399265		KIT, Bushing/Seal -(Magneto Side)
3	391086S		SEAL, Oil -(Magneto Side)
4	693582		SUMP, Engine -Used After Code Date 98063000
4A	496742		SUMP, Engine -Used Before Code Date 98070100
7	273280S		GASKET, Cylinder Head
8	696126		BREATHER ASSEMBLY
9	27803S		GASKET, Breather
10	691666		SCREW -(Breather Assembly)
12	692406		GASKET, Crankcase -(.005)
12	692405		GASKET, Crankcase -(.009)
12	692226		GASKET, Crankcase -(.015)(Standard)
15	690946		PLUG, Oil Drain
16	690136		CRANKSHAFT -Used After Code Date 98063000
16A	693944		CRANKSHAFT -Used After Code Date 95073100 -Used Before Code Date 98070100
16B	693653		CRANKSHAFT -Used Before Code Date 95080100
20	291675S		SEAL, Oil -(PTO Side) (PTO Side)
22	692125		SCREW -(Crankcase Cover/Sump)
24	222698S		KEY, Flywheel
25	499284		PISTON ASSEMBLY -(Standard) -Used Before Code Date 01041900
25	499292		PISTON ASSEMBLY -(.020 Oversize) -Used Before Code Date 01041900
25	696397		PISTON ASSEMBLY -(Standard) -Used After Code Date 01041800
25	696399		PISTON ASSEMBLY -(.020 Oversize) -Used After Code Date 01041800
25	696400		PISTON ASSEMBLY -(.030 Oversize) -Used After Code Date 01041800
26	696403		SET, Ring -(Standard) -Used After Code Date 01041800
26	696404		SET, Ring -(.010 Oversize) -Used After Code Date 01041800
26	696405		SET, Ring -(.020 Oversize) -Used After Code Date 01041800
26	696406		SET, Ring -(.030 Oversize) -Used After Code Date 01041800

Not For Reproduction

Copyright © Briggs and Stratton. All Rights reserved

Crankshaft, Sump, Cylinder, Piston/Rings, Connecting Rod

Mfg. No: 28Q777-0151-01

1330 REPAIR MANUAL

1058 OPERATOR'S MANUAL

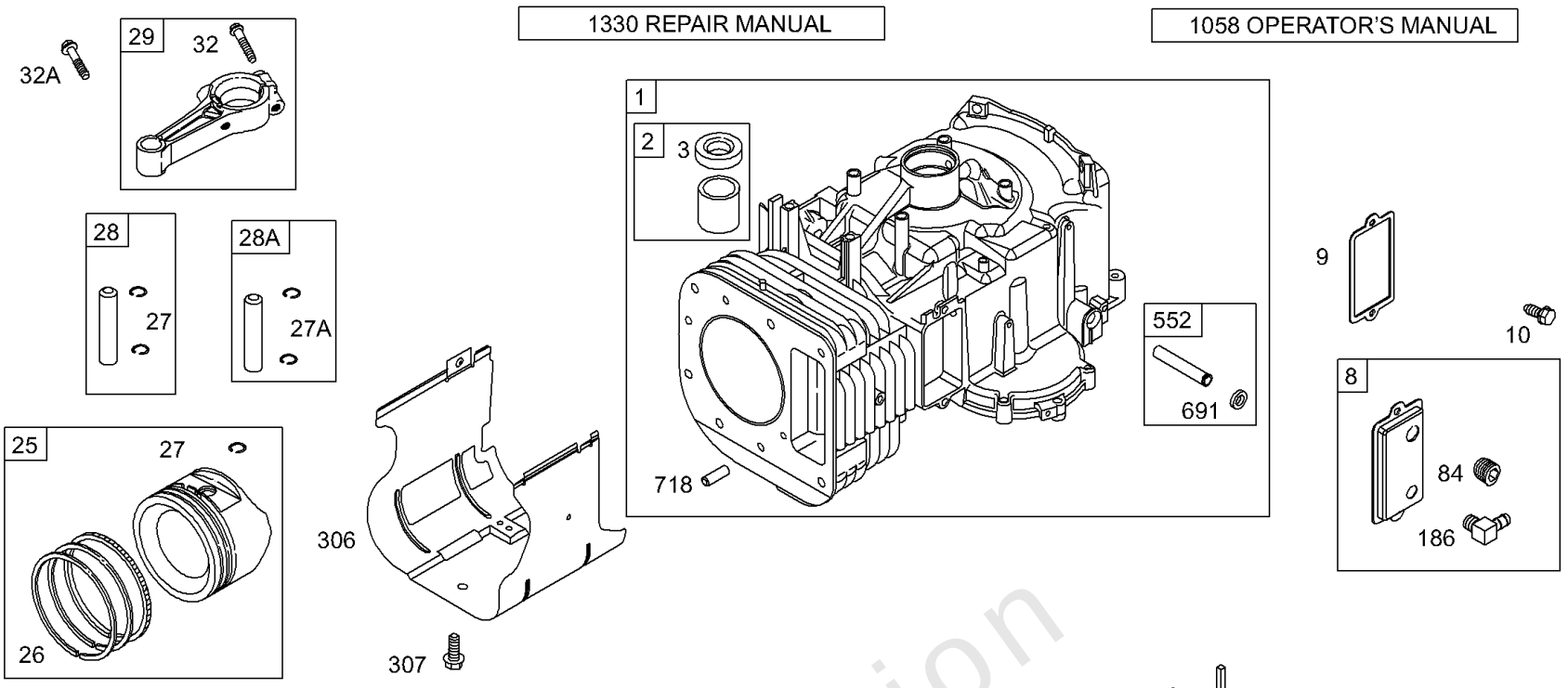

358 ENGINE GASKET KIT

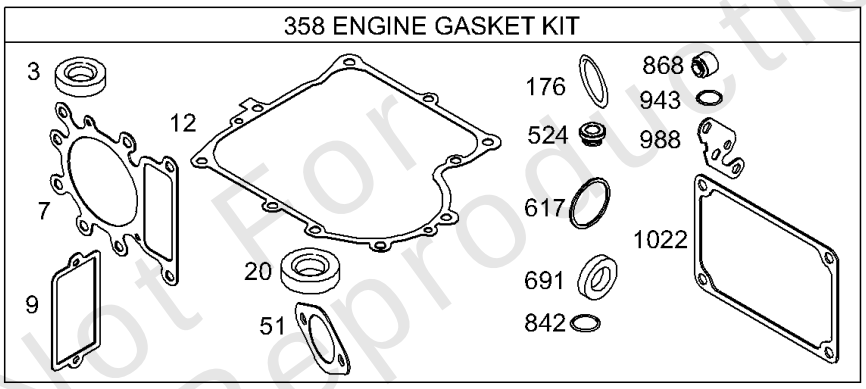

Not For Reproduction

Copyright © Briggs and Stratton. All Rights reserved

Crankshaft, Sump, Cylinder, Piston/Rings, Connecting Rod

REF NO	PART NO	QTY	DESCRIPTION
26	495855		SET, Ring -(.030 Oversize) -Used Before Code Date 01041900
26	495851		SET, Ring -(.020 Oversize) -Used Before Code Date 01041900
26	495854		SET, Ring -(Standard) -Used Before Code Date 01041900
27	691299		LOCK, Piston Pin -Used After Code Date 95101500
27A	691792		LOCK, Piston Pin -Used Before Code Date 95101600
28	498319		PIN, Piston -(Standard) -Used After Code Date 95101500
28	498320		PIN, Piston -(.005 Oversize) -Used After Code Date 95101500
28A	299691		PIN, Piston -(Standard) -Used Before Code Date 95101600
28A	391286		PIN, Piston -(.005 Oversize) -Used Before Code Date 95101600
29	495490		ROD, Connecting -(.020 Undersize) -Used Before Code Date 98070100
29	692419		ROD, Connecting -(Standard) -Used After Code Date 98063000
29	692420		ROD, Connecting -(.020 Undersize) -Used After Code Date 98063000
29	494504S		ROD, Connecting -(Standard) -Used Before Code Date 98070100
32	692852		SCREW -(Connecting Rod) (1 5/8) -Used After Code Date 98063000
32	690356		SCREW -(Connecting Rod) (1 7/8) -Used Before Code Date 98070100
32A	690348		SCREW -(Connecting Rod) (1 5/8) -Used Before Code Date 98070100
43	691968		SLINGER, Governor/Oil
45	690564		TAPPET, Valve
46	698492		CAMSHAFT -Used After Code Date 98063000
46A	790340		CAMSHAFT -Used Before Code Date 98070100
51	692137		GASKET, Intake
84	690343		PLUG, Oil Drain
146	691639		KEY, Woodruff
176	691917		SEAL, O-Ring -(Air Cleaner Base)
186	691609		CONNECTOR, Hose -(Vacuum Line)(Breather Assembly)
306	698454		SHIELD, Cylinder
307	691003		SCREW -(Cylinder Shield)

Not For Reproduction

Copyright © Briggs and Stratton. All Rights reserved

Crankshaft, Sump, Cylinder, Piston/Rings, Connecting Rod

Mfg. No: 28Q777-0151-01

1330 REPAIR MANUAL

1058 OPERATOR'S MANUAL

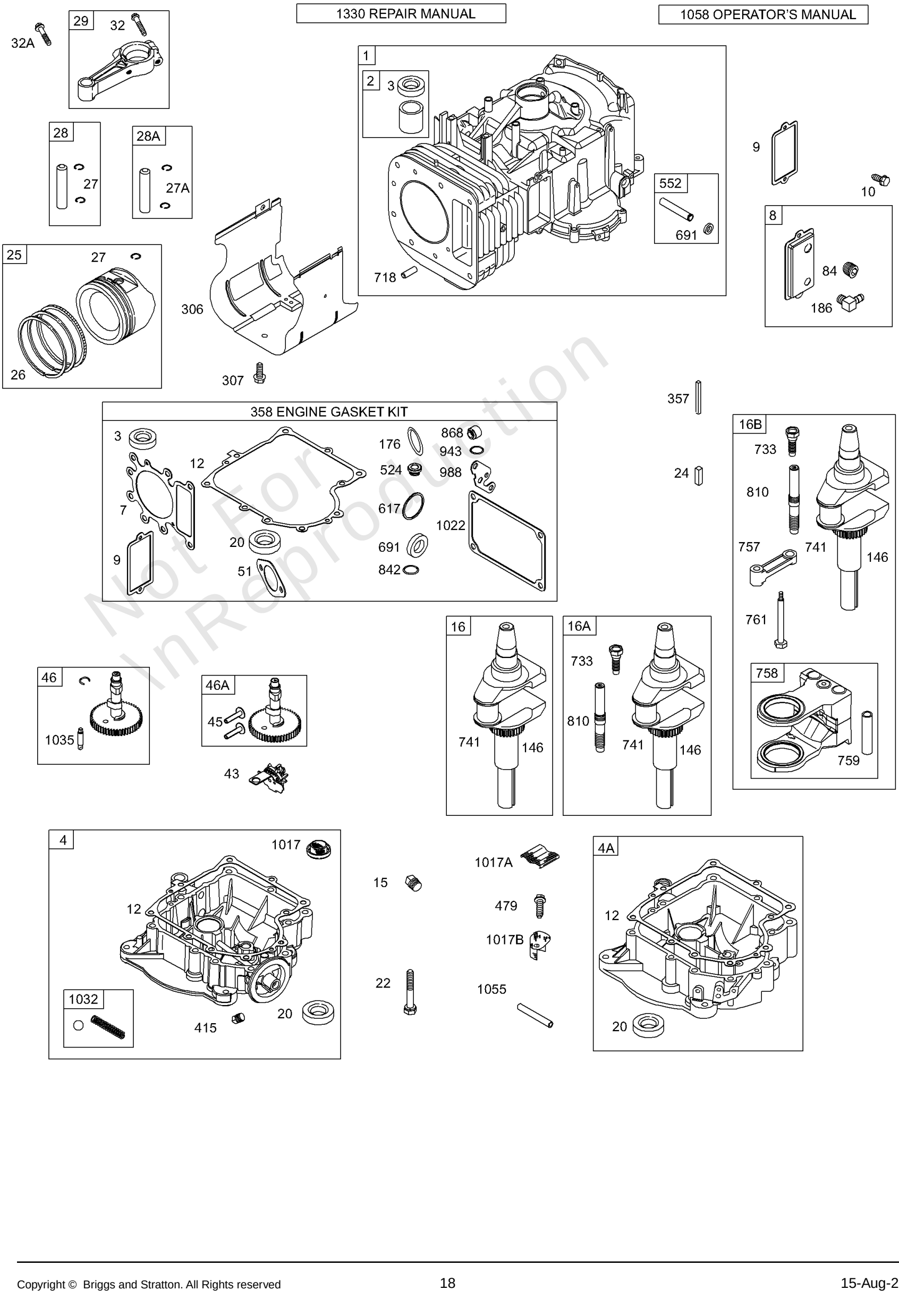

Not For Reproduction

Crankshaft, Sump, Cylinder, Piston/Rings, Connecting Rod

REF NO	PART NO	QTY	DESCRIPTION
357	691483		KEY, Drive Pulley
358	495993		GASKET SET, Engine -Used Before Code Date 97100600
358	691580		GASKET SET, Engine -Used After Code Date 97100500
415	690283		PLUG, Oil -(Pressure Relief Valve)
479	691627		SCREW -(Oil Pump Screen) -Used Before Code Date 94110700
524	281370S		SEAL, O-Ring -(Dipstick Tube)
552	491986		BUSHING, Governor Crank -(1/4 I.D.)
617	692138		SEAL, O-Ring -(Intake Manifold)
691	692407		SEAL, Governor Shaft
718	690959		PIN, Locating
733	698139		SCREW -(Crankshaft Extension)
741	691284		GEAR, Timing
757	691714		LINK, Counterweight -(-Used After Code Date 78100411)
758	692423		COUNTERWEIGHT
759	691239		PIN, Counterweight
761	691096		SCREW -(Counterweight)
810	691779		EXTENSION, Crankshaft
842	691870		SEAL, O-Ring -(Dipstick Tube)
868	690968		SEAL, Valve
943	690589		SEAL, O-Ring -(Oil Pump Cover) -Used After Code Date 98063000
988	691317		GASKET, Oil Adapter
1017	690770		SCREEN, Oil Pump -Used After Code Date 98071900
1017A	691216		SCREEN, Oil Pump
1017B	225019		SCREEN, Oil Pump -Used Before Code Date 94110700
1022	272475S		GASKET, Rocker Cover
1032	491710		SPRING, Compression
1035	693784		SHAFT, Pump -Used After Code Date 98063000
1055	690528		TUBE, Oil Pump
1058	274789		MANUAL, Operator's -(Emission)
1058	272904		MANUAL, Operator's -(Non Emission)
1330	272147		MANUAL, Repair

Not For Reproduction

Copyright © Briggs and Stratton. All Rights reserved

Cylinder Head, Rocker Cover, Oil Pump, Oil Filter

Mfg. No: 28Q777-0151-01

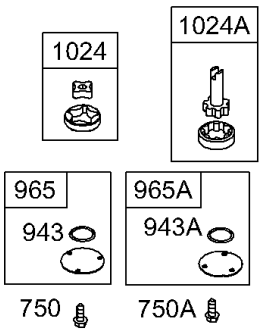

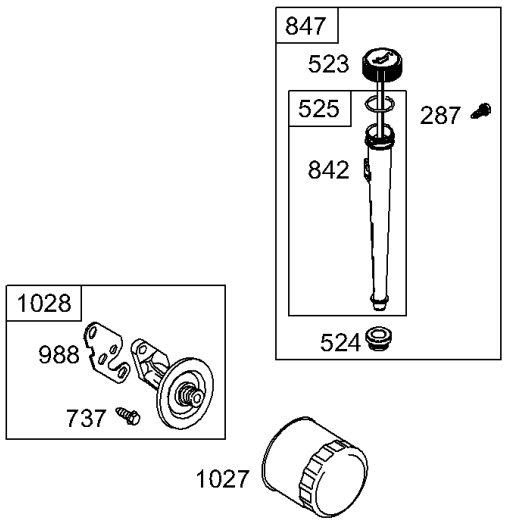

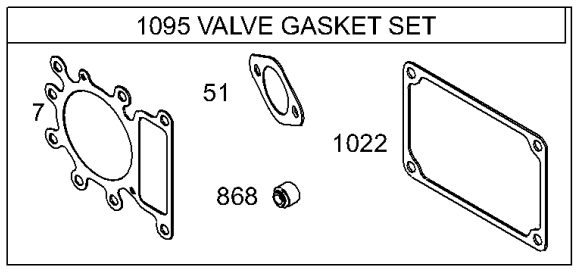

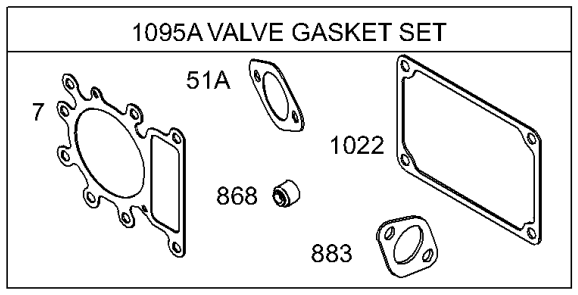

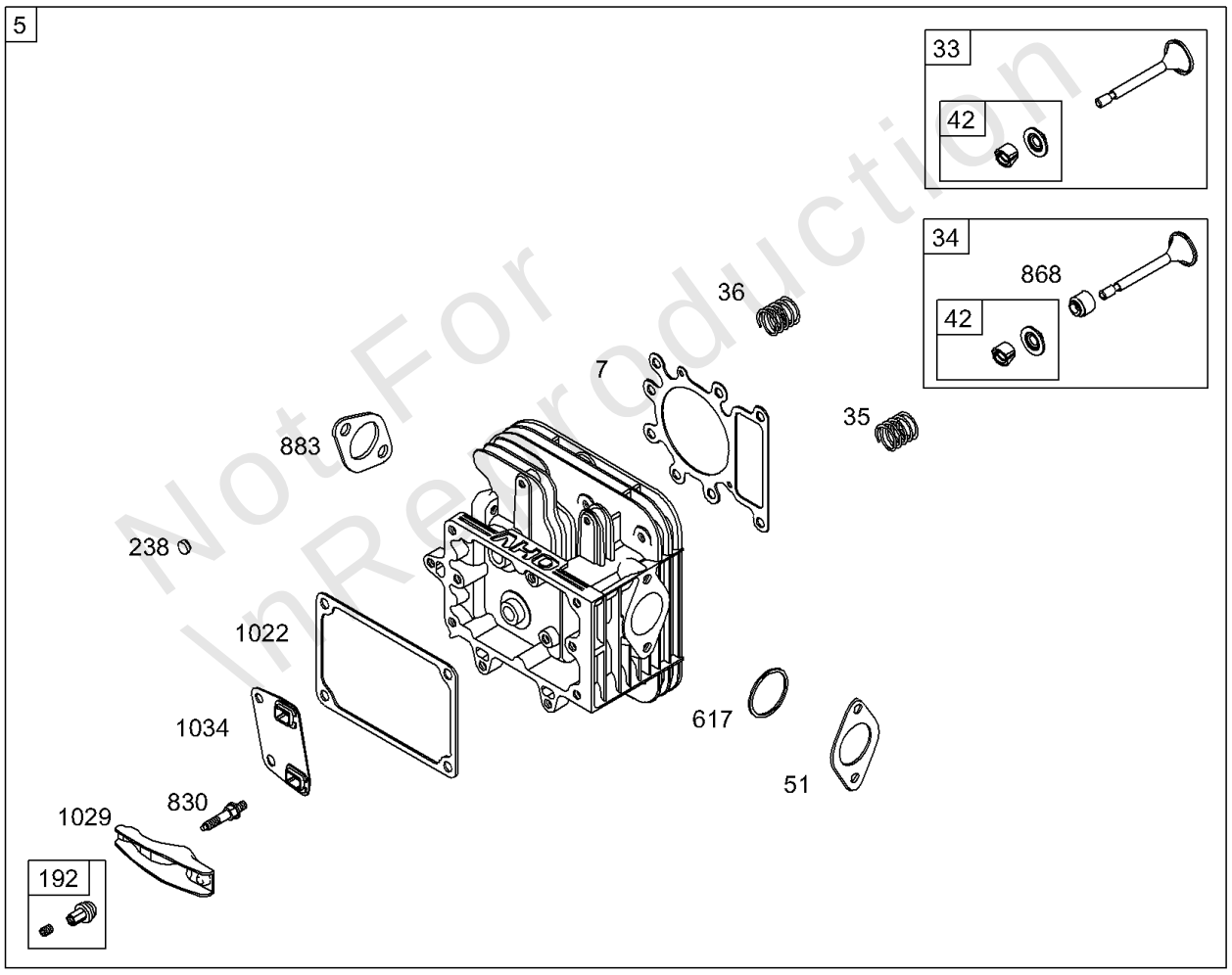

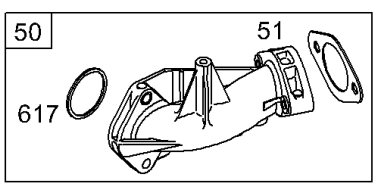

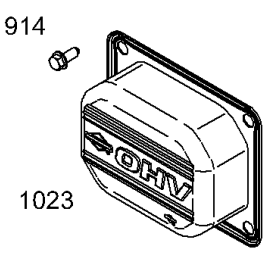

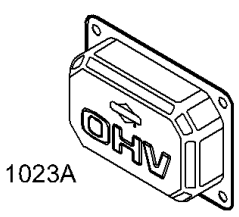

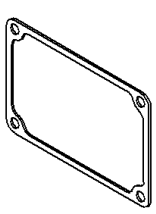

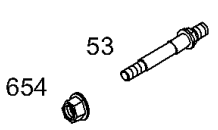

Not For Reproduction

Copyright © Briggs and Stratton. All Rights reserved

Cylinder Head, Rocker Cover, Oil Pump, Oil Filter

REF NO	PART NO	QTY	DESCRIPTION
5	698148		HEAD, Cylinder
7	273280S		GASKET, Cylinder Head
13	690360		SCREW -(Cylinder Head)
33	695760		VALVE, Exhaust
34	695761		VALVE, Intake
35	691279		SPRING, Valve -(Intake)
36	691279		SPRING, Valve -(Exhaust)
42	499586		KEEPER, Valve
45	690564		TAPPET, Valve
50	690193		MANIFOLD, Intake
51	692137		GASKET, Intake
51A	272569S		GASKET, Intake -Used Before Code Date 97100600
53	690227		STUD -(Carburetor)
54	691148		SCREW -(Intake Manifold) -Used After Code Date 97100500
54A	690953		SCREW -(Intake Manifold) -Used Before Code Date 97100600
192	691986		ADJUSTER, Rocker Arm
238	691843		CAP, Valve
287	691002		SCREW -(Dipstick Tube)
337	491055S		PLUG, Spark
383	89838S		WRENCH, Spark Plug
523	692014		DIPSTICK
524	281370S		SEAL, O-Ring -(Dipstick Tube)
525	691398		TUBE, Dipstick
617	692138		SEAL, O-Ring -(Intake Manifold)
635	691909		BOOT, Spark Plug
654	690958		NUT -(Carburetor)
737	691118		SCREW -(Oil Filter Adapter)
750	691033		SCREW -(Oil Pump Cover) -Used After Code Date 98063000
750A	692198		SCREW -(Oil Pump Cover) -Used Before Code Date 98070100
830	691095		STUD, Rocker Arm
842	691870		SEAL, O-Ring -(Dipstick Tube)
847	496415		DIPSTICK/TUBE ASSEMBLY
868	690968		SEAL, Valve
883	692236		GASKET, Exhaust
914	691108		SCREW -(Rocker Cover)
943	690589		SEAL, O-Ring -(Oil Pump Cover) -Used After Code Date 98063000

Not For Reproduction

Copyright © Briggs and Stratton. All Rights reserved

Cylinder Head, Rocker Cover, Oil Pump, Oil Filter

Mfg. No: 28Q777-0151-01

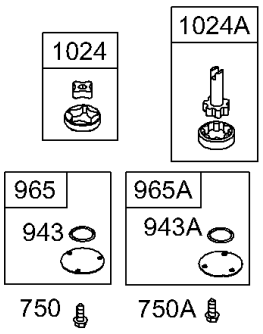

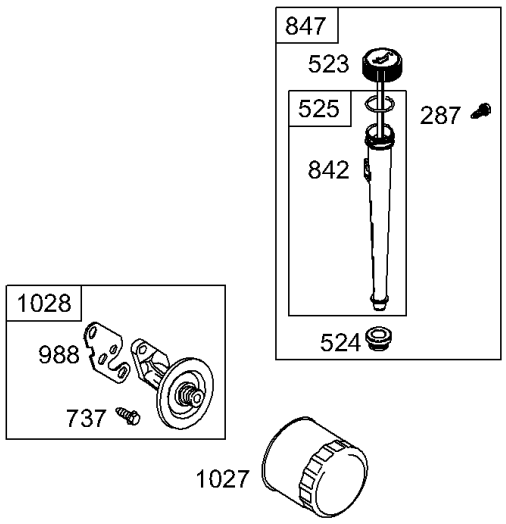

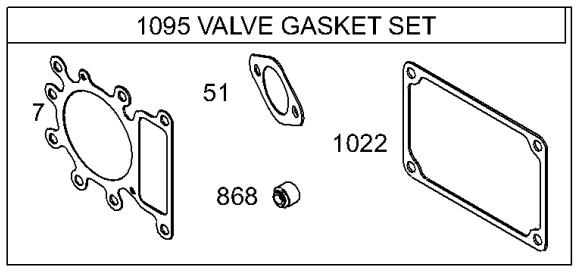

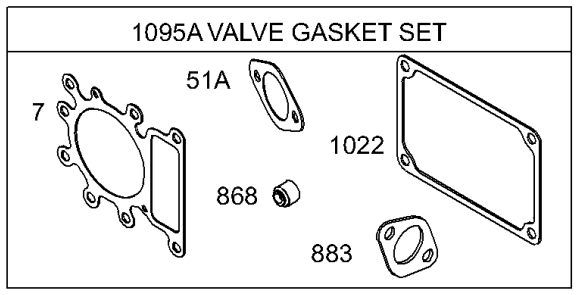

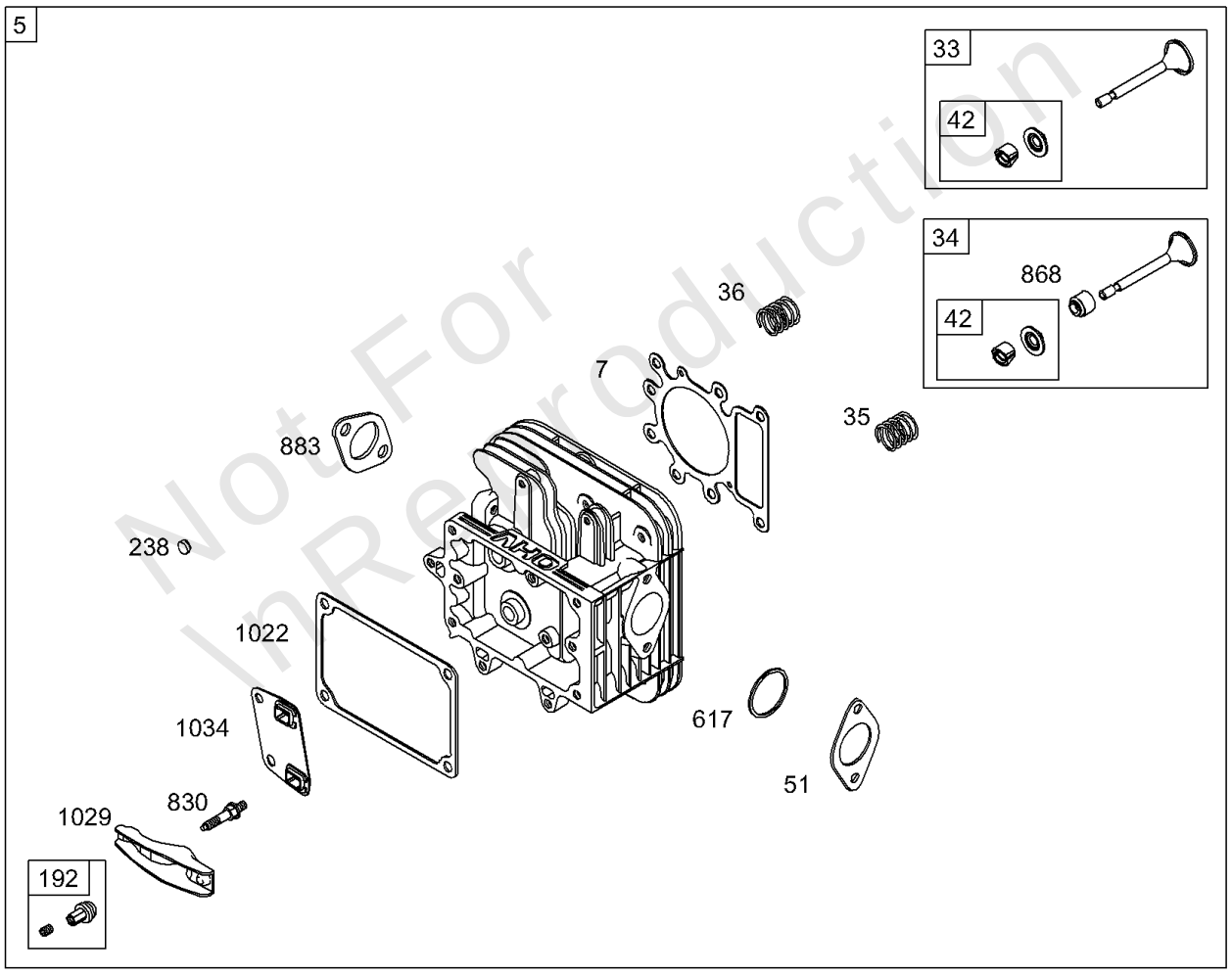

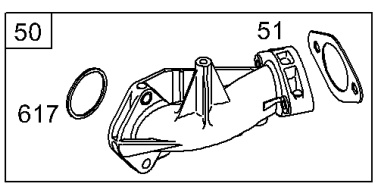

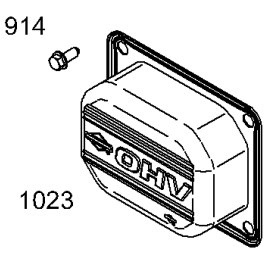

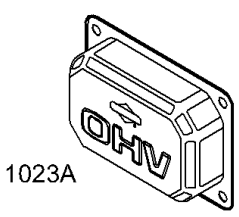

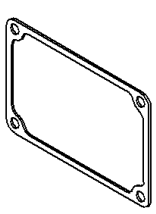

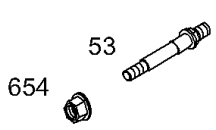

Not For Reproduction

Copyright © Briggs and Stratton. All Rights reserved

Cylinder Head, Rocker Cover, Oil Pump, Oil Filter

REF NO	PART NO	QTY	DESCRIPTION
943A	690604		SEAL, O-Ring -(Oil Pump Cover) -Used Before Code Date 98070100
965	499613		COVER, Oil Pump -Used After Code Date 98063000
965A	496745		COVER, Oil Pump -Used Before Code Date 98070100
988	691317		GASKET, Oil Adapter
1022	272475S		GASKET, Rocker Cover
1023	692492		COVER, Rocker
1023A	691192		COVER, Rocker
1024	499054		PUMP, Oil -Used After Code Date 98063000
1024A	493884		PUMP, Oil -Used Before Code Date 98070100
1026	692011		ROD, Push -(Exhaust)
1026	692003		ROD, Push -(Intake)
1027	492932S		FILTER, Oil
1028	496744		ADAPTER, Oil Filter
1029	691751		ARM, Rocker
1034	690822		GUIDE, Push Rod
1095	691581		GASKET SET, Valve -Used After Code Date 97100500
1095A	495992		GASKET SET, Valve -Used Before Code Date 97100600

Not For Reproduction

Copyright © Briggs and Stratton. All Rights reserved

Mfg. No: 28Q777-0151-01

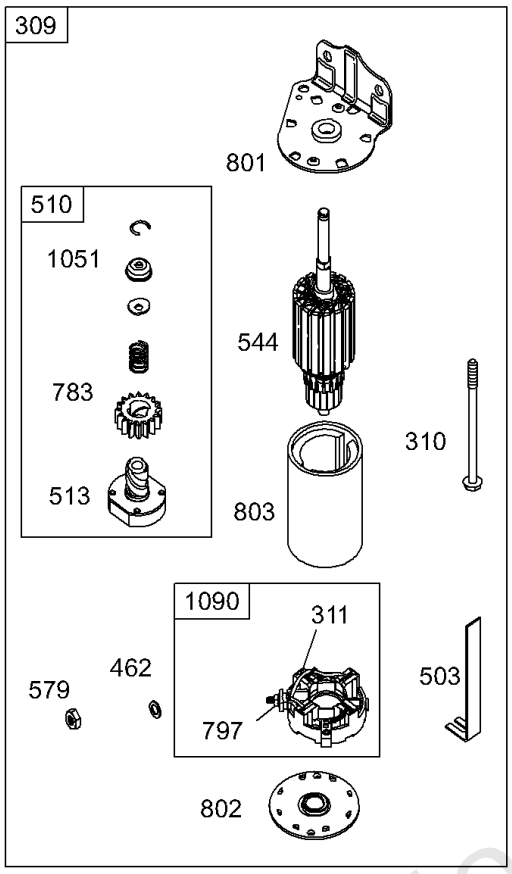

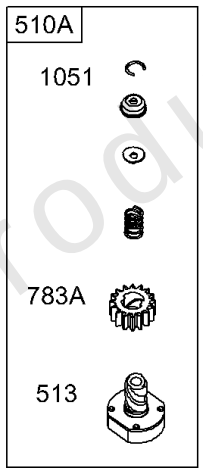

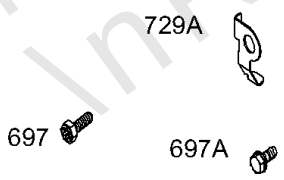

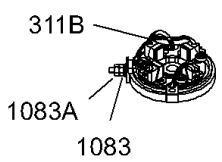

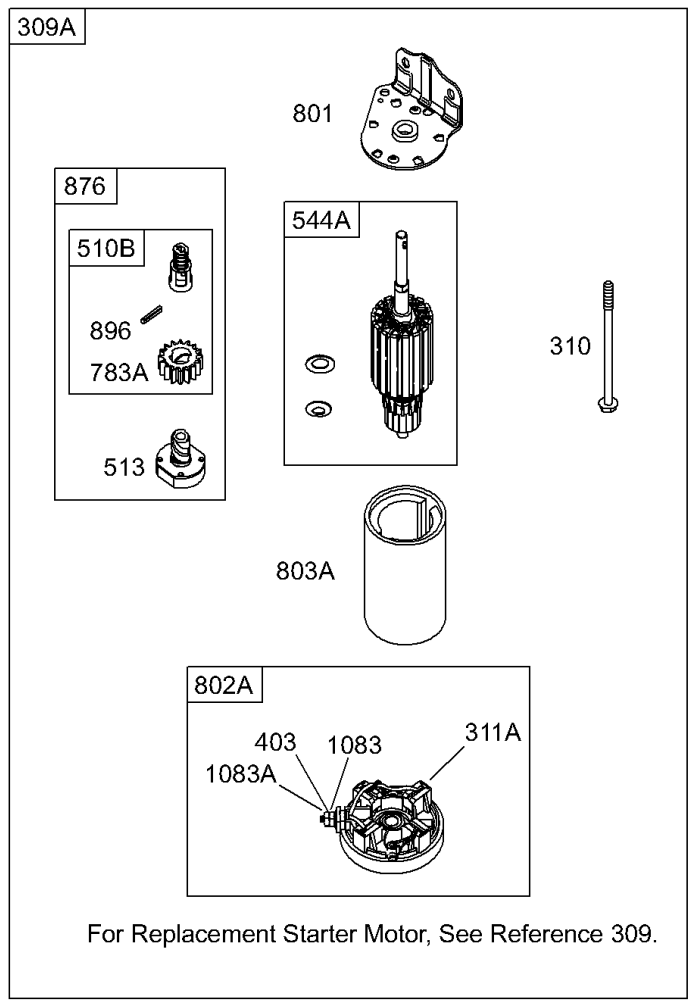

Not For Reproduction In Reproduction

Copyright © Briggs and Stratton. All Rights reserved

Electric Starter

REF NO	PART NO	QTY	DESCRIPTION
309	499521		MOTOR, Starter -(4 3/8 Housing Length For Aluminum Ring Gear Only)
309	693054		MOTOR, Starter -(3 5/8) (Aluminum Ring Gear)
309	693551		MOTOR, Starter -(3 5/8 Housing Length For Steel Ring Gear Only)
309	693552		MOTOR, Starter -(4 3/8 Housing Length For Steel Ring Gear Only)
309	497401		MOTOR, Starter -(4 3/8 Housing Length For Plastic Ring Gear Only)
309	497595		MOTOR, Starter -(3 5/8) (Plastic Ring Gear)
309A	-----		Motor-Starter -(For Replacement Starter Motor, Order Reference 309)
310	691263		BOLT -(Starter Motor) (4 3/8 Housing)
310	690323		BOLT -(Starter Motor) (3 5/8" Housing Length)
310	692329		BOLT -(Starter Motor) (4 9/16 Housing)
311	497608		SET, Brush
311A	395538		SET, Brush -(3 5/8 Housing)
311B	490311		SET, Brush -(4 9/16 Housing)
403	690288		WASHER -(End Cap)
462	691261		WASHER -(Starter Cable)
503	691532		STRAP, Starter -Used Before Code Date 99070600
510	693699		DRIVE, Starter -(Used With Steel Ring Gear)
510A	696541		DRIVE, Starter -(Used With Aluminum And Plastic Ring Gears)
510B	696540		DRIVE, Starter
513	692024		CLUTCH, Drive
544	692034		ARMATURE, Starter -(3 5/8 Housing)
544A	490309		ARMATURE, Starter -(4 3/8 Housing)
544A	390837		ARMATURE, Starter -(3 5/8 Housing)
579	691029		NUT -(Starter Cable)
697	690372		SCREW -(Drive Cap)
697A	691058		SCREW -(Drive Cap)
729A	224723		CLIP, Wire -(Starter Motor)
783	693713		GEAR, Pinion -(Steel Ring Gear Only)
783A	695708		GEAR, Pinion
797	693167		NUT -(Brush Retainer)
801	691283		CAP, Drive
802	691286		CAP, End
802A	395537		CAP, End -(3 5/8 Housing)

Not Form Reproduction

Copyright © Briggs and Stratton. All Rights reserved

Mfg. No: 28Q777-0151-01

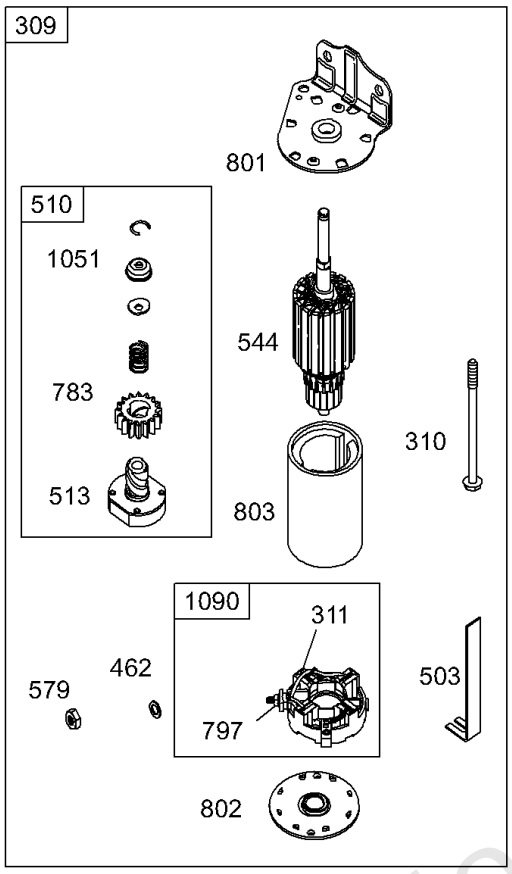

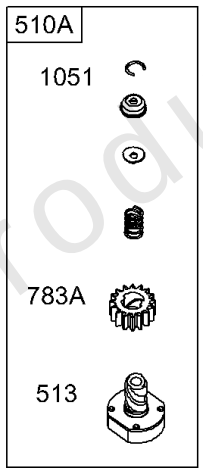

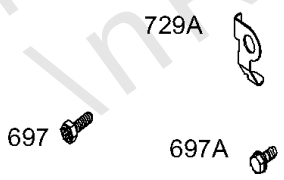

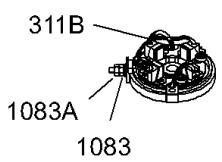

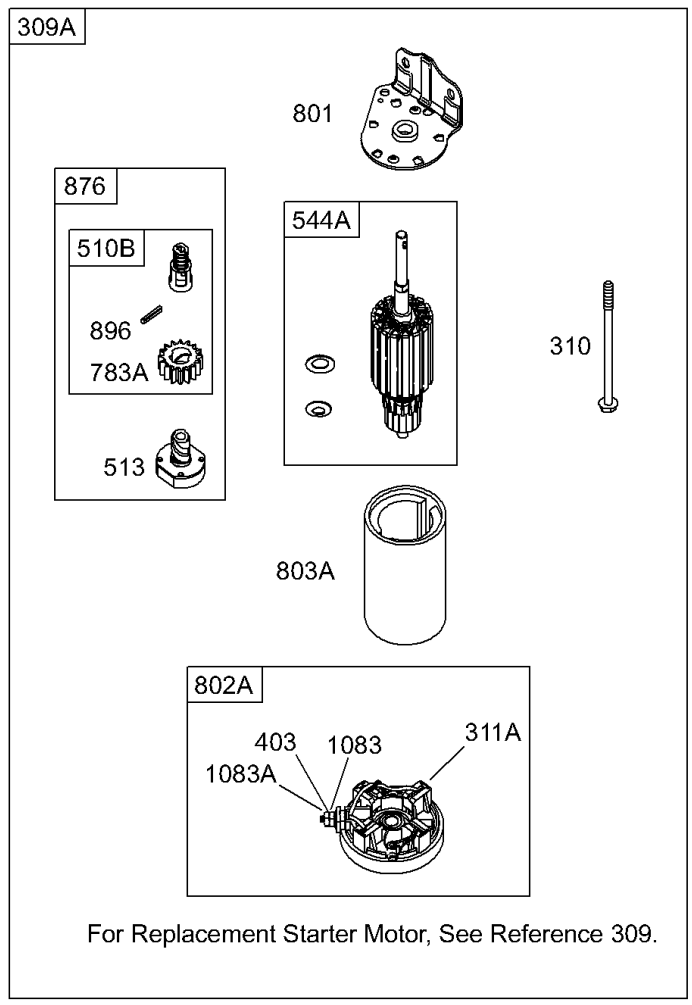

Not For Reproduction

Copyright © Briggs and Stratton. All Rights reserved

Electric Starter

REF NO	PART NO	QTY	DESCRIPTION
803	693757		HOUSING, Starter -(3-5/8 Housing)(4 3/8 Housing Length Serviced By ReferenceNumber 309)
803A	398159		HOUSING, Starter -(3 5/8 Housing)
803A	494205		HOUSING, Starter -(4 3/8 Housing)
876	696539		KIT, Pinion Spring
896	691641		PIN, Drive Retainer
1051	691265		RING, Retaining
1083	690958		NUT -(End Cap) (Serrated)
1083A	691626		NUT -(End Cap)
1090	691293		RETAINER, Brush

Not For\nReproduction

Copyright © Briggs and Stratton. All Rights reserved

Flywheel, Ring Gear, Screens

Mfg. No: 28Q777-0151-01

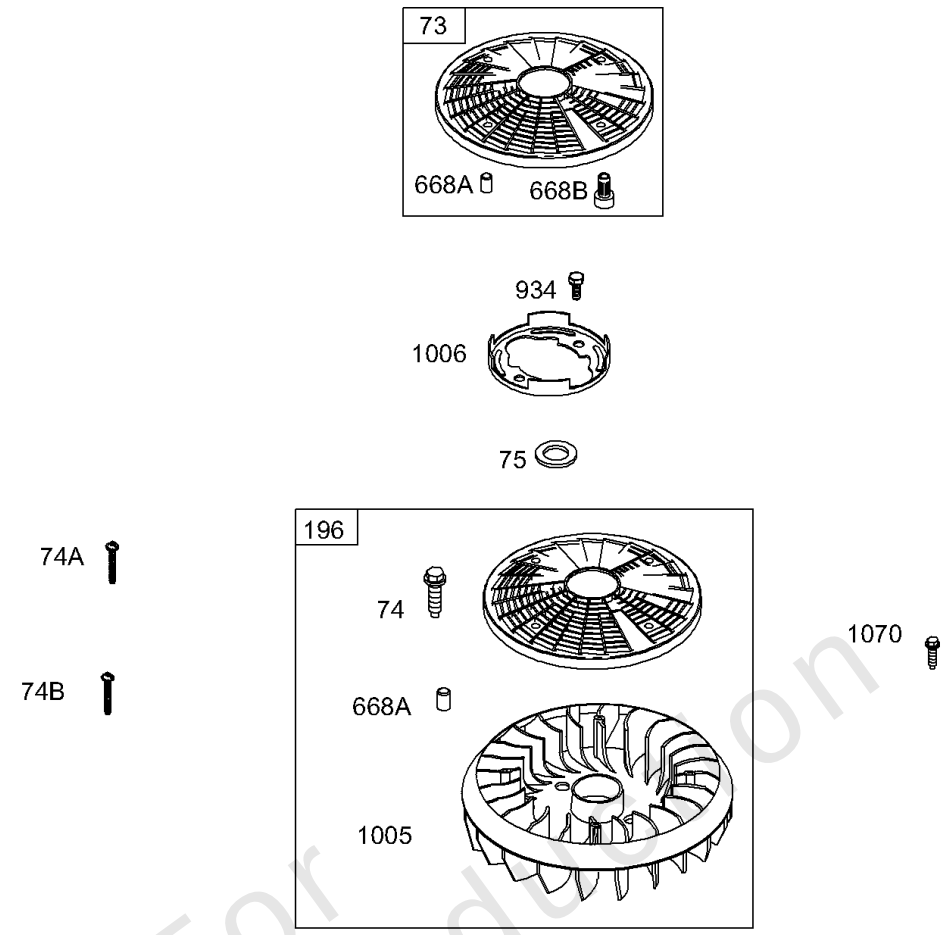

Not For Reproduction

Flywheel, Ring Gear, Screens

REF NO	PART NO	QTY	DESCRIPTION
23	693557		FLYWHEEL -(Steel Ring Gear)
73	494439		SCREEN, Rotating
74	691658		SCREW -(Rotating Screen) (1 3/4)
74A	691674		SCREW -(Rotating Screen) (1 1/2)
74B	698425		SCREW -(Rotating Screen) (1 1/4" Long)
75	690582		WASHER -(Flywheel)
165	693148		NUT -(Ring Gear)
196	695493		FAN/SCREEN ASSEMBLY
363	19203		PULLER, Flywheel
668A	691215		SPACER -(Rotating Screen)
668B	691500		SPACER -(Rotating Screen)
695	693109		SCREW -(Ring Gear)
726	-----		Gear-Ring -(Services Steel Ring Gear Only)(For Replacement Starter Motor, SeeReference 309)
726A	696537		GEAR, Ring -(Aluminum)(Services Plastic Ring Gear Only)
783	693713		GEAR, Pinion -(Steel Ring Gear Only)
783A	695708		GEAR, Pinion
934	691058		SCREW -(Fan Retainer)
1005	697853		FAN, Flywheel
1006	690452		RETAINER, Fan
1051	691265		RING, Retaining
1070	690372		SCREW -(Flywheel Fan)

Not For Reproduction

Copyright © Briggs and Stratton. All Rights reserved

Replacement Engine

REF NO	PART NO	QTY	DESCRIPTION
	31L7770136	1	Replacement Engine
	697762	1	Replacement Short Block
	-----		Top No-Load Speed: 3400 -Trim: ALL
	-----		Service Note: Transfer Muffler and/or Spark Arrester Assembly from the original engine if suitable for additional service or add new parts as required
	-----		Service Note: If the replacement engine supersedes to or is a Model 310000 series engine, refer to the illustrations located after the conversion data for this model series. The overall dimensions which differ, are shown in the illustrations.
	-----		Service Note: If after making a visual inspection and it is determined the Model 310000 series engine cannot be used because of equipment interference, the original engine should be repaired with a short block and/or individual parts.
	-----		Short Block Note: If repair would also require the Cylinder Head Assembly Order Short Block Part Number 791117.

Not For\nReproduction

Copyright © Briggs and Stratton. All Rights reserved

Mfg. No: 28Q777-0151-01

WALBRO

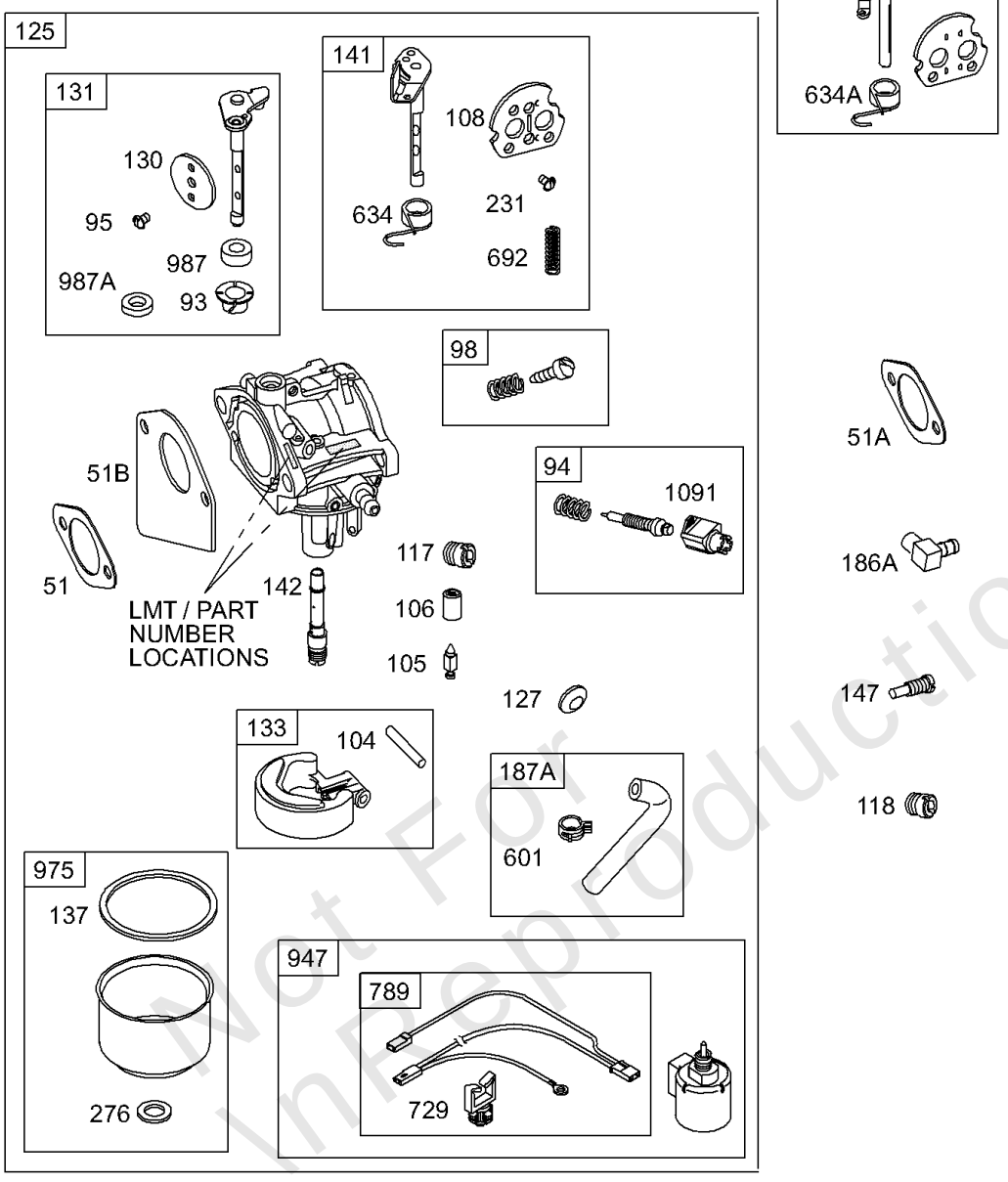

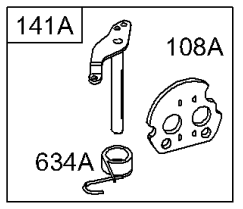

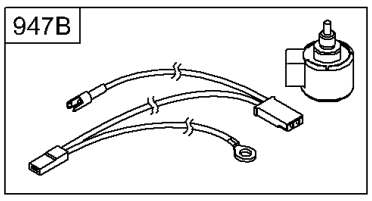

977 CARBURETOR GASKET SET

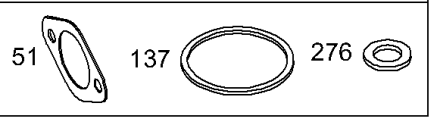

121 CARBURETOR OVERHAUL KIT

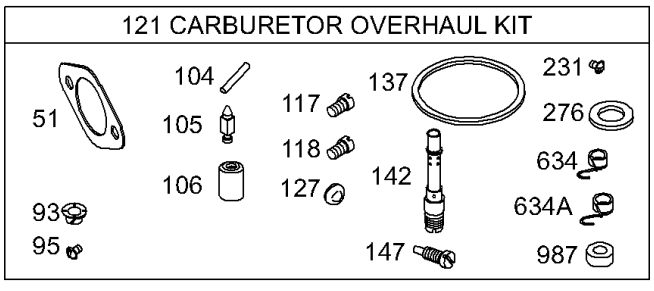

NIKKI

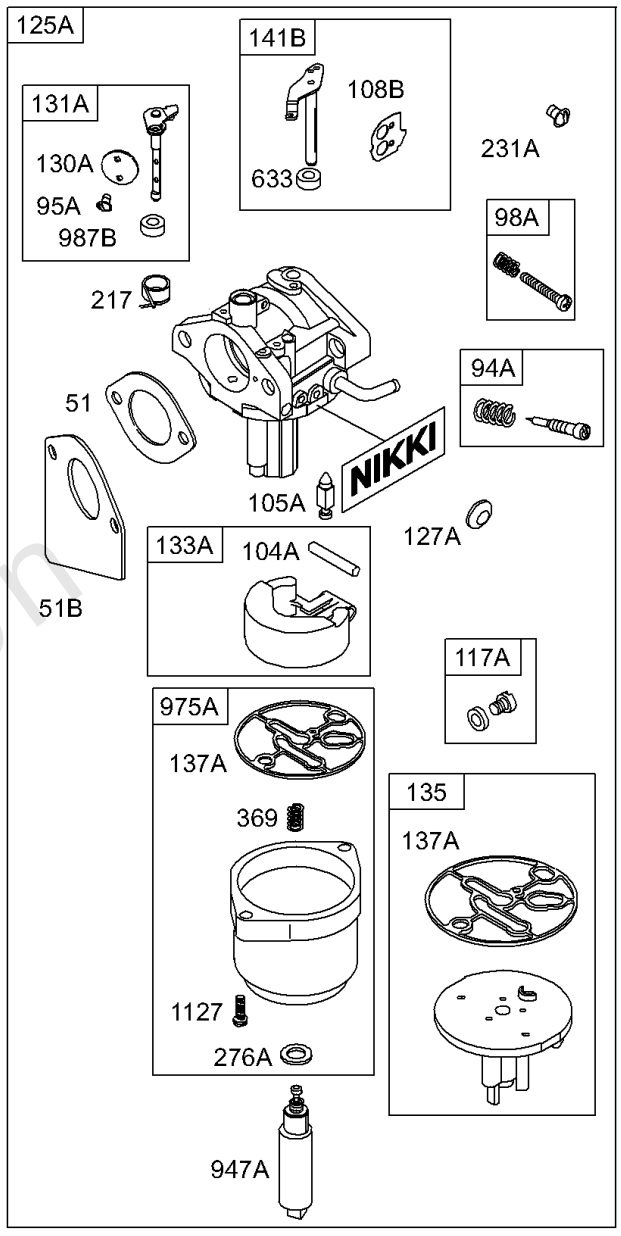

977A CARBURETOR GASKET SET

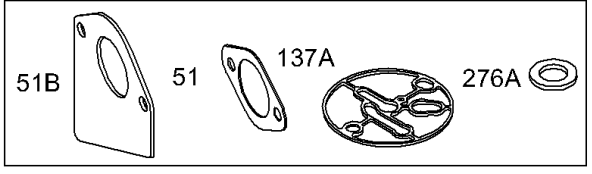

121A CARBURETOR OVERHAUL KIT

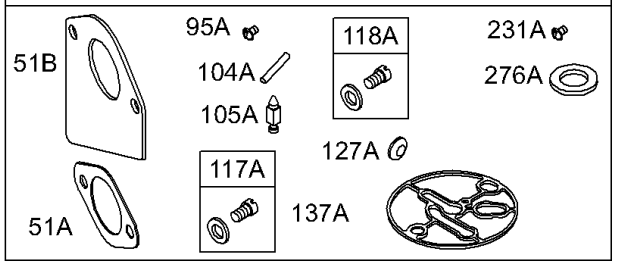

Not For Reproduction

Copyright © Briggs and Stratton. All Rights reserved

REF NO	PART NO	QTY	DESCRIPTION
51	692137		GASKET, Intake
51A	272569S		GASKET, Intake -Used Before Code Date 97100600
51B	692284		GASKET, Intake
93	690602		BUSHING, Throttle Shaft
94	498030		KIT, Idle Mixture -(Lmt 153154,155,156)
94A	695425		KIT, Idle Mixture
95	691636		SCREW -(Throttle Valve)
95A	690718		SCREW -(Throttle Valve)
98	495800		KIT, Idle Speed -(Idle Speed) (Lmt 54, 55, 91)
98A	695408		KIT, Idle Speed
104	690525		PIN, Float Hinge
104A	694918		PIN, Float Hinge
105	231855S		VALVE, Float Needle
105A	694922		VALVE, Float Needle
106	690577		SEAT, Inlet -(Gravity Feed Carburetor)
106	691780		SEAT, Inlet -(Pump Feed Carburetor)
108	690464		VALVE, Choke
108A	692344		VALVE, Choke
108B	695419		VALVE, Choke
117	697228		JET, Main -(Standard) (LMT 33, 34, 73, 74, 76, 121, 122, 124, 125, 126, 128, 129, 130, 132, 137, 138)
117	692408		JET, Main -(Standard) (LMT 153, 154, 155, 156)
117A	695415		JET, Main -(Standard)
118	231850		JET, Main -(High Altitude) (LMT 33, 34, 73, 74, 76, 121, 122, 124, 125, 126, 128, 129, 130, 132,137, 138)
118	232116		JET, Main -(High Altitude) (LMT 150, 152)
118	692411		JET, Main -(High Altitude) (LMT 153, 154, 156)
118A	695416		JET, Main -(High Altitude)
121	498116		KIT, Carburetor Overhaul -Used Before Code Date 96072600
121	499233		KIT, Carburetor Overhaul -Used After Code Date 96072500 -Used Before Code Date 97100600
121	690191		KIT, Carburetor Overhaul -Used After Code Date 97100500
121A	695427		KIT, Carburetor Overhaul
125	698782		CARBURETOR -(Pump Feed Carburetor)
125	698620		CARBURETOR -(Gravity Feed Carburetor)
125A	-----		Carburetor -(Nikki)(Service With Walbro Carburetor, 698445, Gravity Feed)
127	695005		PLUG, Welch
127A	690727		PLUG, Welch

Not For Reproduction

Copyright © Briggs and Stratton. All Rights reserved

Mfg. No: 28Q777-0151-01

WALBRO

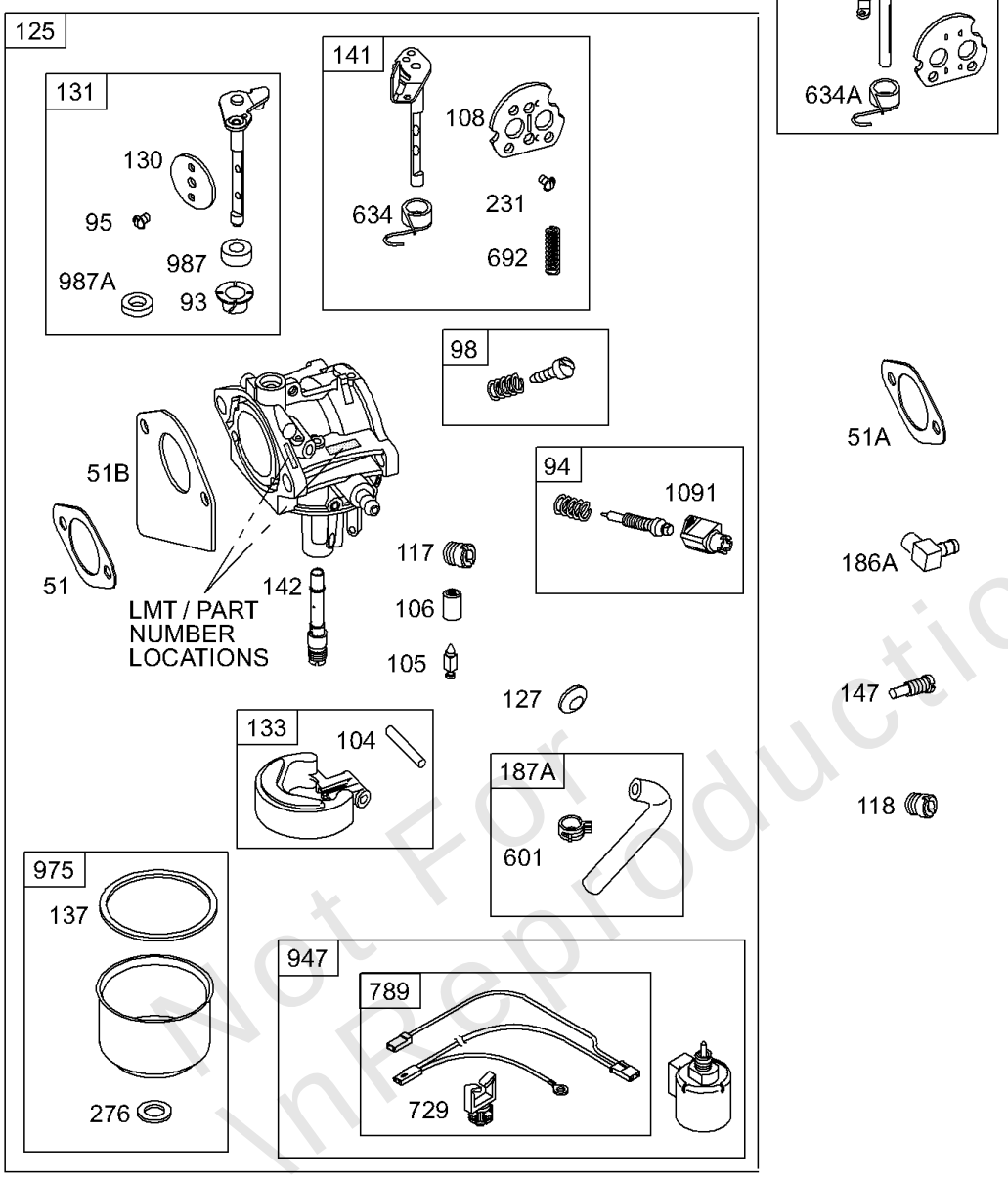

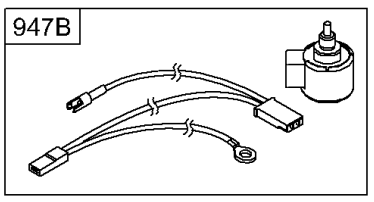

977 CARBURETOR GASKET SET

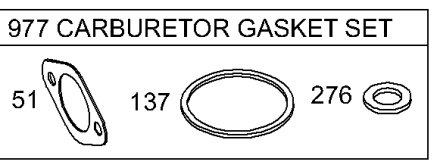

121 CARBURETOR OVERHAUL KIT

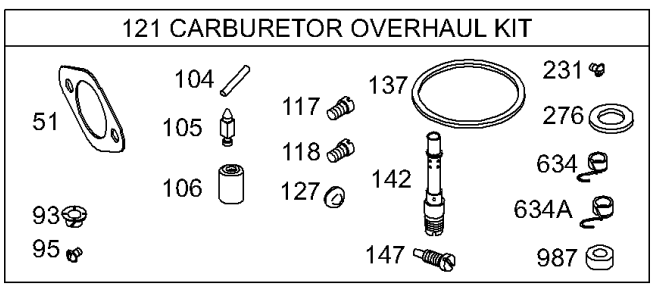

NIKKI

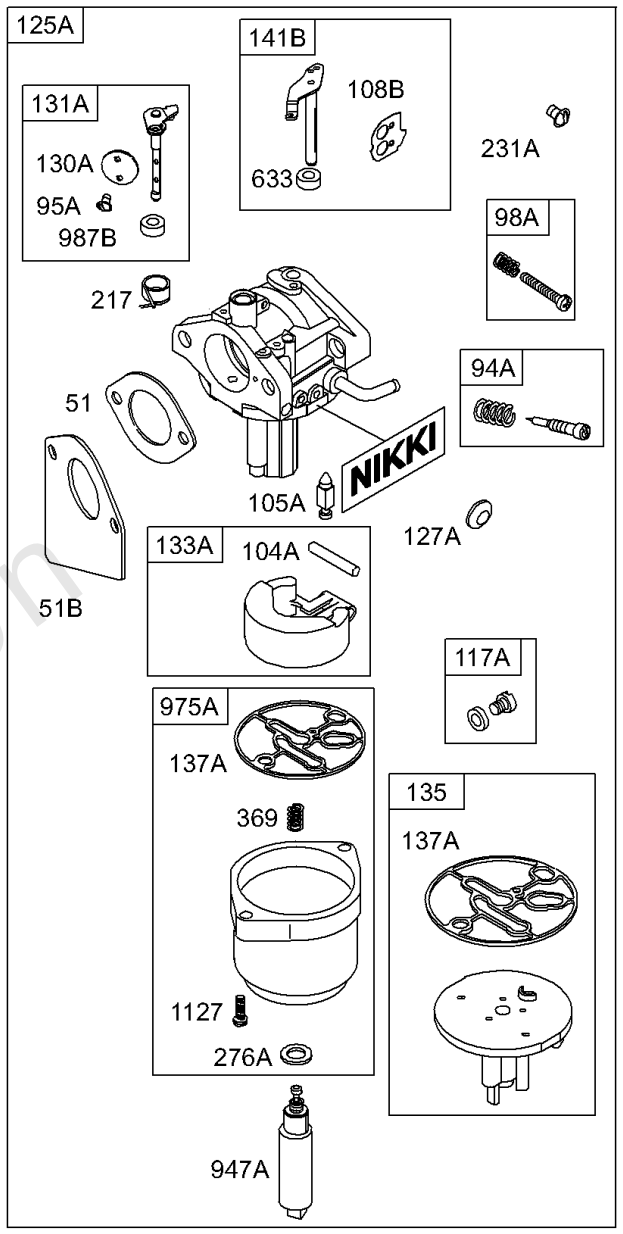

977A CARBURETOR GASKET SET

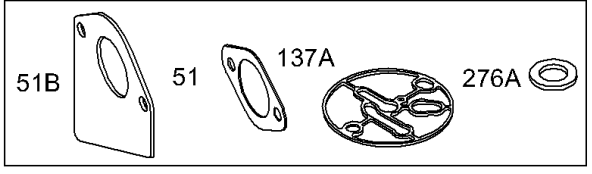

121A CARBURETOR OVERHAUL KIT

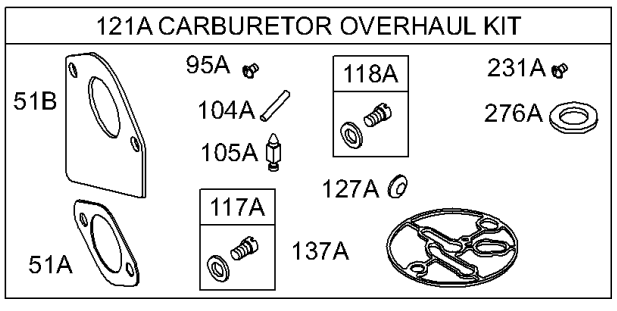

Not For Reproduction

REF NO	PART NO	QTY	DESCRIPTION
130	691750		VALVE, Throttle
130A	695418		VALVE, Throttle
131	494379		KIT, Throttle Shaft
131A	695421		KIT, Throttle Shaft
133	494381		FLOAT, Carburetor
133A	694914		FLOAT, Carburetor
135	696142		TUBE, Fuel Transfer
137	281165S		GASKET, Float Bowl
137A	695426		GASKET, Float Bowl
141	495097		KIT, Choke Shaft -(Manual Choke) (Lmt 28,31,55,91,155,156)
141A	495931		KIT, Choke Shaft -(Choke-A-Matic)
141B	695420		KIT, Choke Shaft
142	231990		NOZZLE, Carburetor -(Standard) (LMT 33, 34, 73, 74, 76, 121, 122, 124, 125, 126, 128, 129, 130, 132,137, 138)
142	692412		NOZZLE, Carburetor -(Standard) (LMT 149, 150, 152, 153, 154, 155, 156)
147	497472		JET, Pilot -(LMT 33, 34)
147	231985		JET, Pilot -(LMT 73, 74, 76, 121, 122, 124, 125, 126, 128, 129, 130, 132, 137, 138)
186A	692317		CONNECTOR, Hose -(Carburetor) -Used Before Code Date 02102800
187A	699331		LINE, Fuel -(Formed)(10-1/4)(Cut to Required Length)
187A	697907		LINE, Fuel -(Formed)(9-5/8 Inches)(Cut To Required Length)
217	695409		SPRING, Choke Return
231	691636		SCREW -(Choke Valve)
231A	690718		SCREW -(Choke Valve)
276	692255		WASHER, Sealing
276A	695410		WASHER, Sealing
369	695422		SPRING, Float Bowl
601	95162S		CLAMP, Hose
633	695414		SEAL, Choke/Throttle Shaft -(Choke Shaft)
634	690801		SPRING/SEAL ASSEMBLY -(LMT 155)
634A	690802		SPRING/SEAL ASSEMBLY -(LMT 154)
692	690572		SPRING, Detent
729	691335		CLIP, Wire -(Wiring Harness/Solenoid)
789	692037		HARNESS, Wiring
947	692734		SOLENOID, Fuel
947A	695423		SOLENOID, Fuel
947B	497672		SOLENOID, Fuel
975	495933		BOWL, Float -(Float Bowl)
975A	695417		BOWL, Float
977	690192		SET, Carburetor Gasket -Used After Code Date 97060500

Not For Reproduction

Copyright © Briggs and Stratton. All Rights reserved

Mfg. No: 28Q777-0151-01

WALBRO

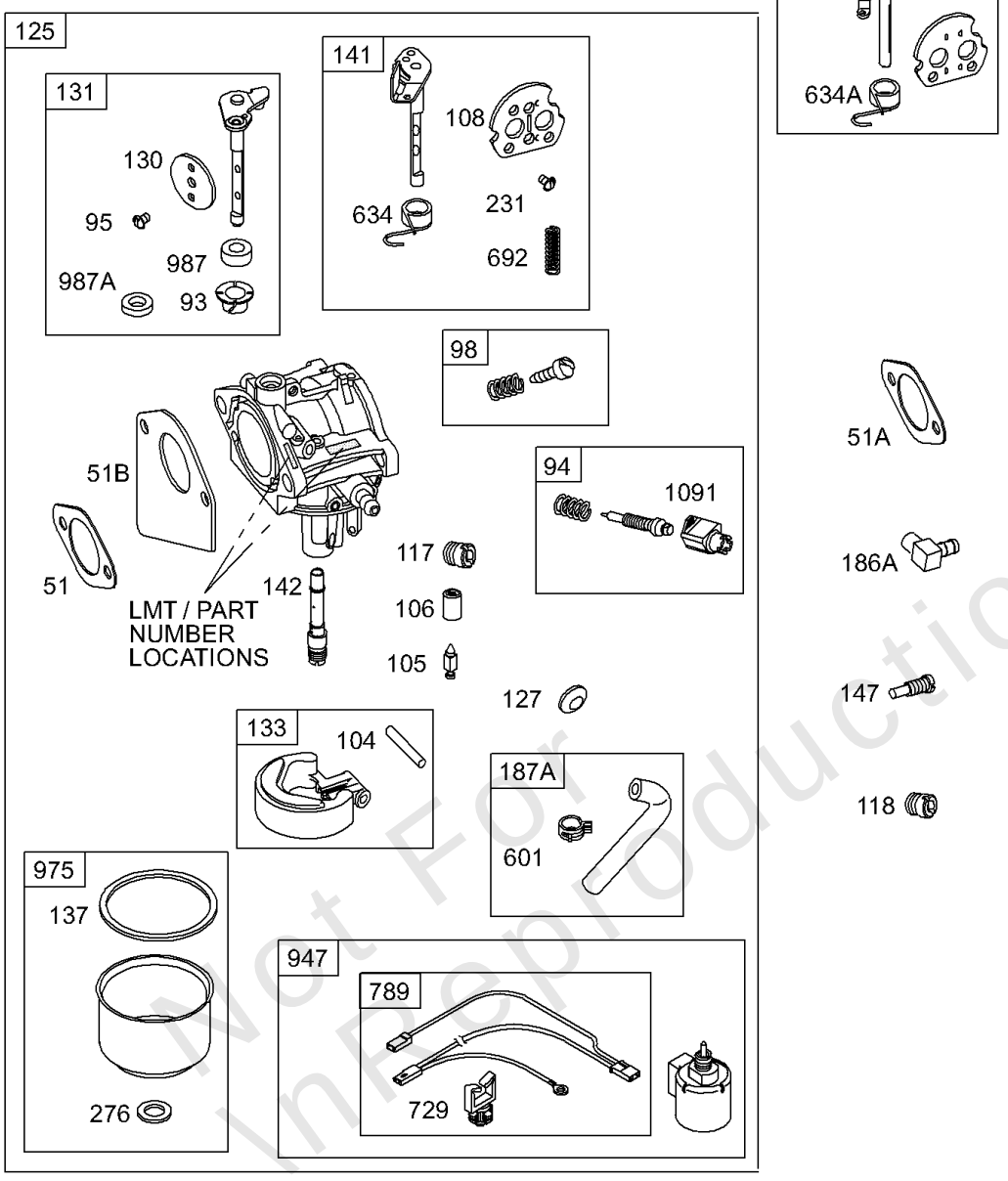

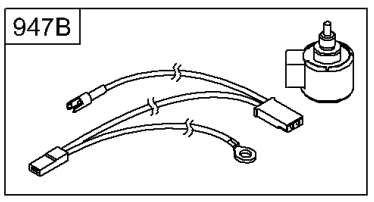

977 CARBURETOR GASKET SET

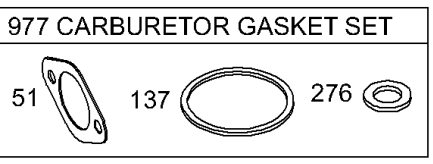

121 CARBURETOR OVERHAUL KIT

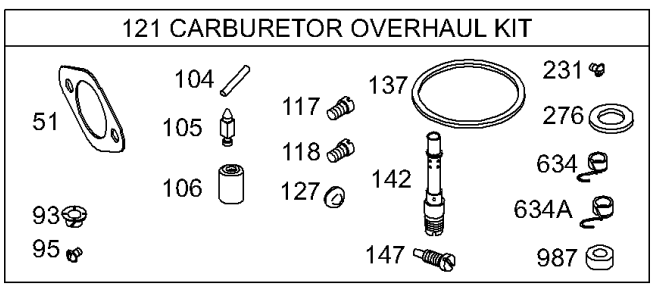

NIKKI

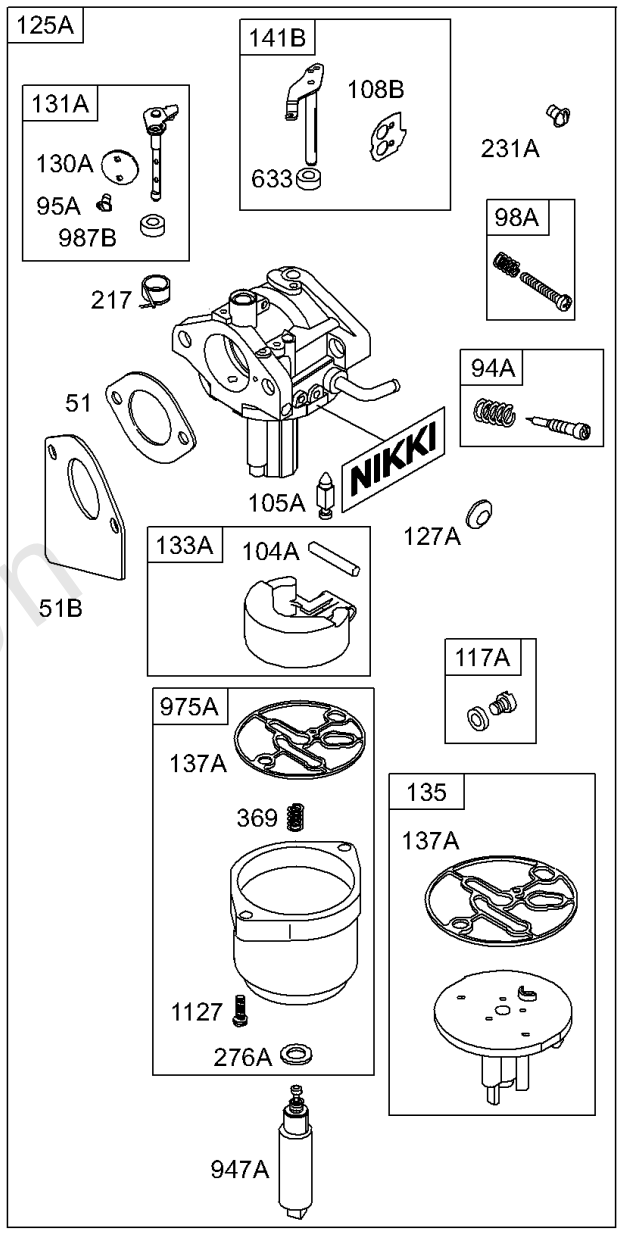

977A CARBURETOR GASKET SET

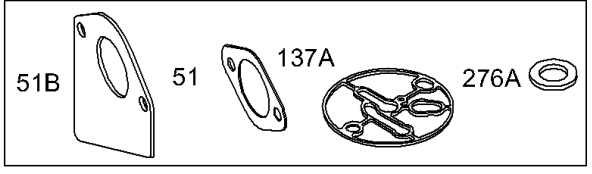

121A CARBURETOR OVERHAUL KIT

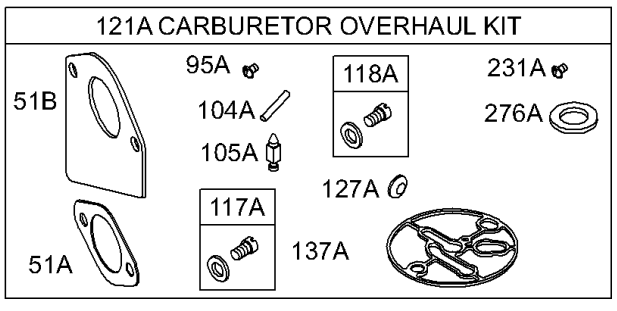

Not For Reproduction

Copyright © Briggs and Stratton. All Rights reserved

REF NO	PART NO	QTY	DESCRIPTION
977A	695428		SET, Carburetor Gasket
987	691326		SEAL, Choke/Throttle Shaft
987A	692001		SEAL, Choke/Throttle Shaft -(LMT 33, 34)
987B	698777		SEAL, Choke/Throttle Shaft -(Choke Shaft)
1091	691333		CAP, Limiter
1127	695407		SCREW -(Float Bowl) (Float Bowl to Carburetor Body)

Not For\nReproduction

Copyright © Briggs and Stratton. All Rights reserved

VANGUARD®

COMMERCIAL POWER

BRIGGS&STRATTON®

Copyright © Briggs and Stratton. All Rights reserved

15-Aug-2019