Parts Manual

Mfg. No: 28B707-1114-E1

Copyright © Briggs and Stratton. All Rights reserved

21-Aug-2019

Model Components

Page

Air Cleaner, Muffler, Deflecto. 4
Alternator, Wires, Regulator. 8
Blower Housing, Shrouds, Label Kits. 10
Carburetor, Overhaul Kits. 14
Cylinder, Piston/Ring, Crankshaft, Gasket Kits, Sump. 18
Electric Starters. 24
Fuel Tank, Hoses, Pump, Controls. 28
Replacement Engine. 32
Rewind Starter, Flywheel. 33

Not For
InReproduction

Copyright © Briggs and Stratton. All Rights reserved

Air Cleaner, Muffler, Deflecto

Mfg. No: 28B707-1114-E1

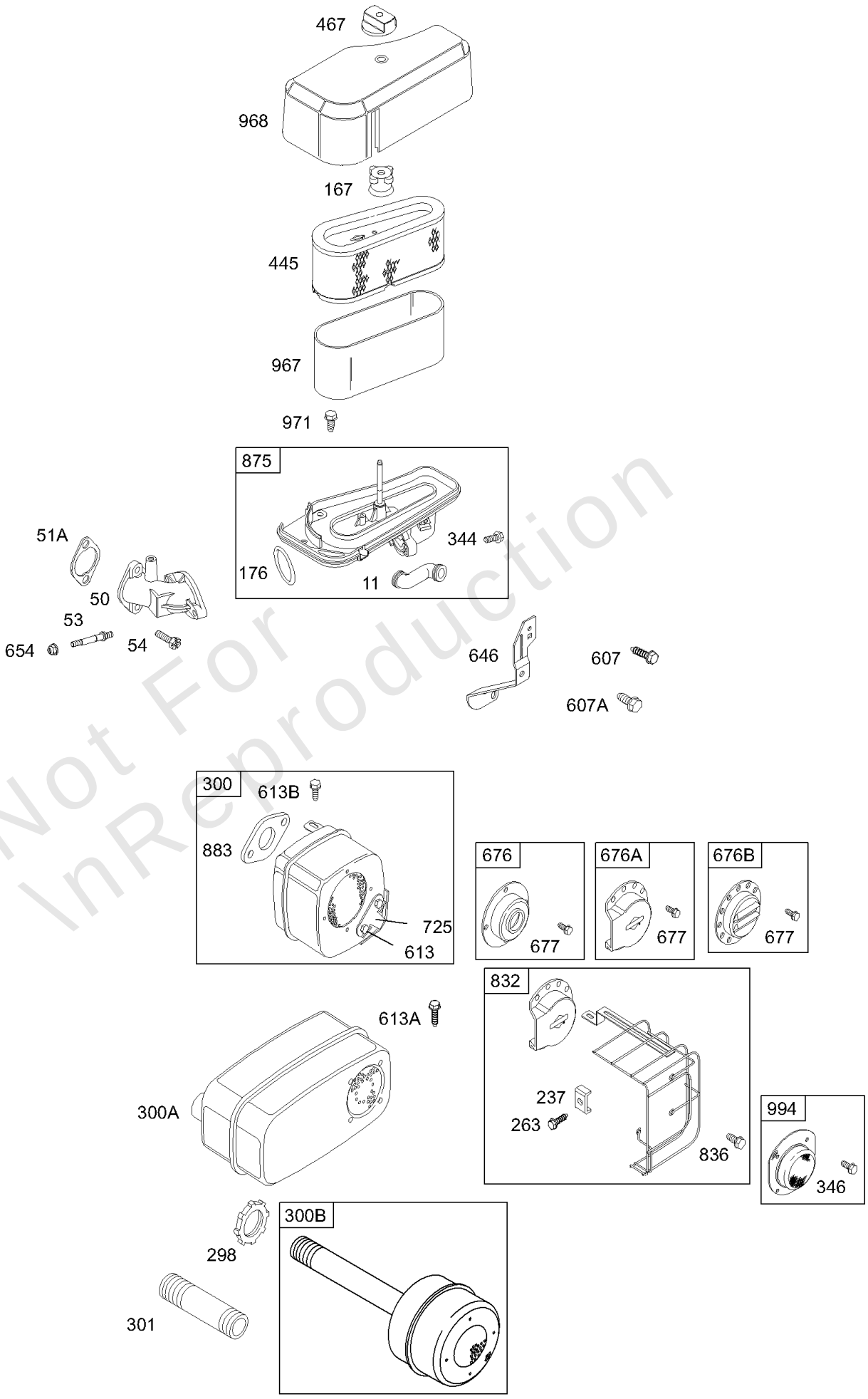

Not For Production

Air Cleaner, Muffler, Deflecto

REF NO	PART NO	QTY	DESCRIPTION
11	692253		TUBE, Breather
50	691711		MANIFOLD, Intake
51A	272554S		GASKET, Intake
53	690227		STUD -(Carburetor)
54	690953		SCREW -(Intake Manifold)
167	692297		SEAL, Air Cleaner Nut
176	691917		SEAL, O-Ring -(Air Cleaner Base)
237	690409		RETAINER, Muffler Guard
263	690367		SCREW -(Muffler Guard Retainer)
298	691808		LOCKNUT -(Muffler and Elbow)
300	691874		MUFFLER
300A	498984S		MUFFLER
300B	391569S		MUFFLER
301	93768		PIPE, Exhaust -(5 1/4)
344	693675		SCREW -(Cable Clamp)
346	690661		SCREW -(Spark Arrestor)
445	691667		FILTER, A/C Cartridge
467	691668		KNOB, Air Cleaner Cover
607	690703		SCREW -(Air Cleaner Brace)
607A	691693		SCREW -(Air Cleaner Brace)
613	691416		SCREW -(Muffler)
613A	690297		SCREW -(Muffler)
613B	692198		SCREW -(Muffler)
646	690460		BRACE, Air Cleanr
654	690958		NUT -(Carburetor)
676	396903		DEFLECTOR, Muffler
676A	393761		DEFLECTOR, Muffler -(Side Outlet)
676B	397630		DEFLECTOR, Muffler -(Louvered Outlet)
677	690661		SCREW -(Muffler Deflector)
725	690420		SHIELD, Heat
832	692361		GUARD, Muffler
836	691083		SCREW -(Muffler Guard)
875	693670		BASE, Air Cleaner -(Plastic)
883	692236		GASKET, Exhaust
967	272477S		FILTER, Pre Cleaner
968	691324		COVER, Air Cleaner
971	691108		SCREW -(Air Cleaner Base to Carburetor)

Not For Reproduction

Copyright © Briggs and Stratton. All Rights reserved

Air Cleaner, Muffler, Deflecto

Mfg. No: 28B707-1114-E1

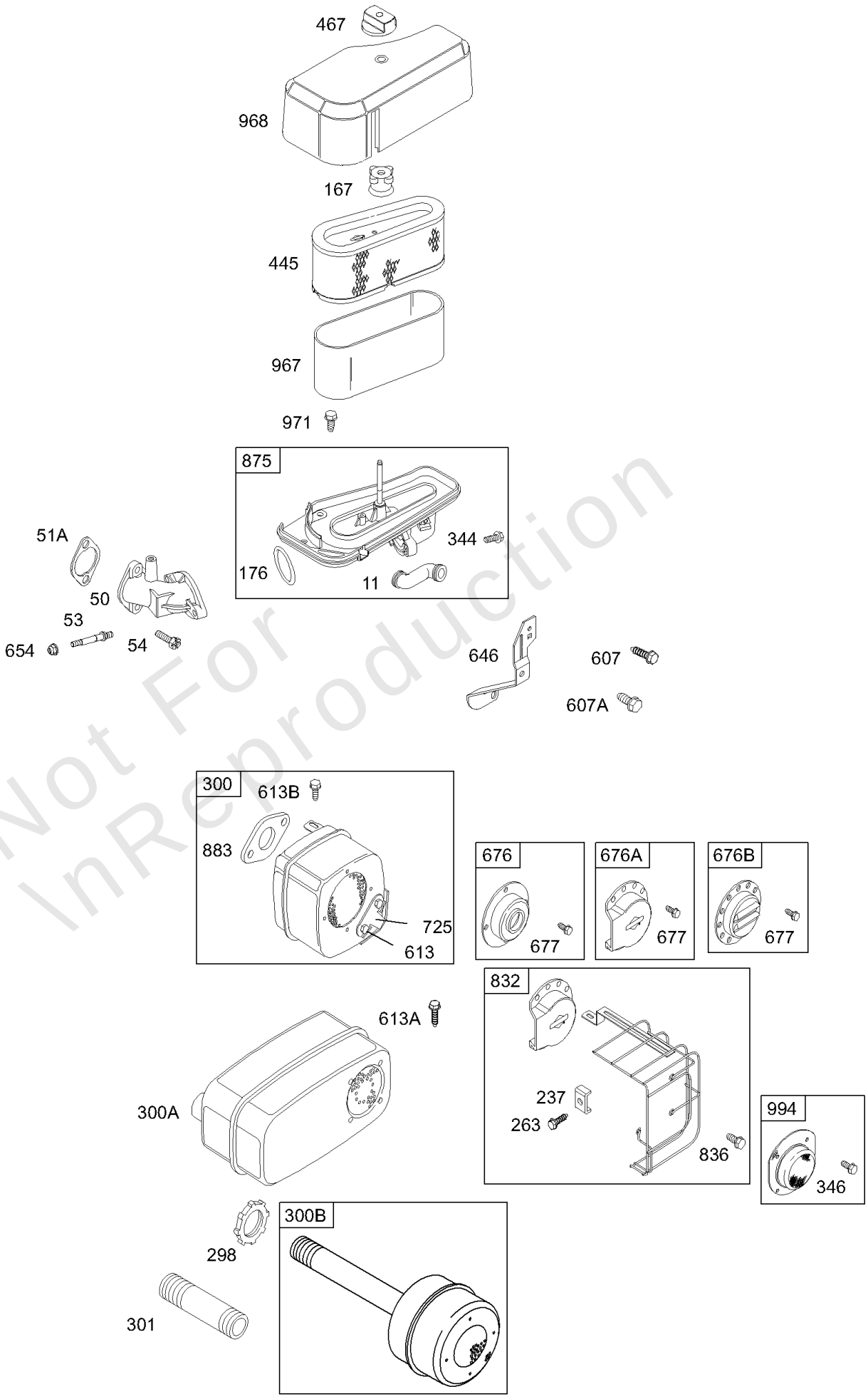

Not For Production

Air Cleaner, Muffler, Deflecto

REF NO	PART NO	QTY	DESCRIPTION
994	392390		ARRESTOR, Spark

Not For\nReproduction

Alternator, Wires, Regulator

Mfg. No: 28B707-1114-E1

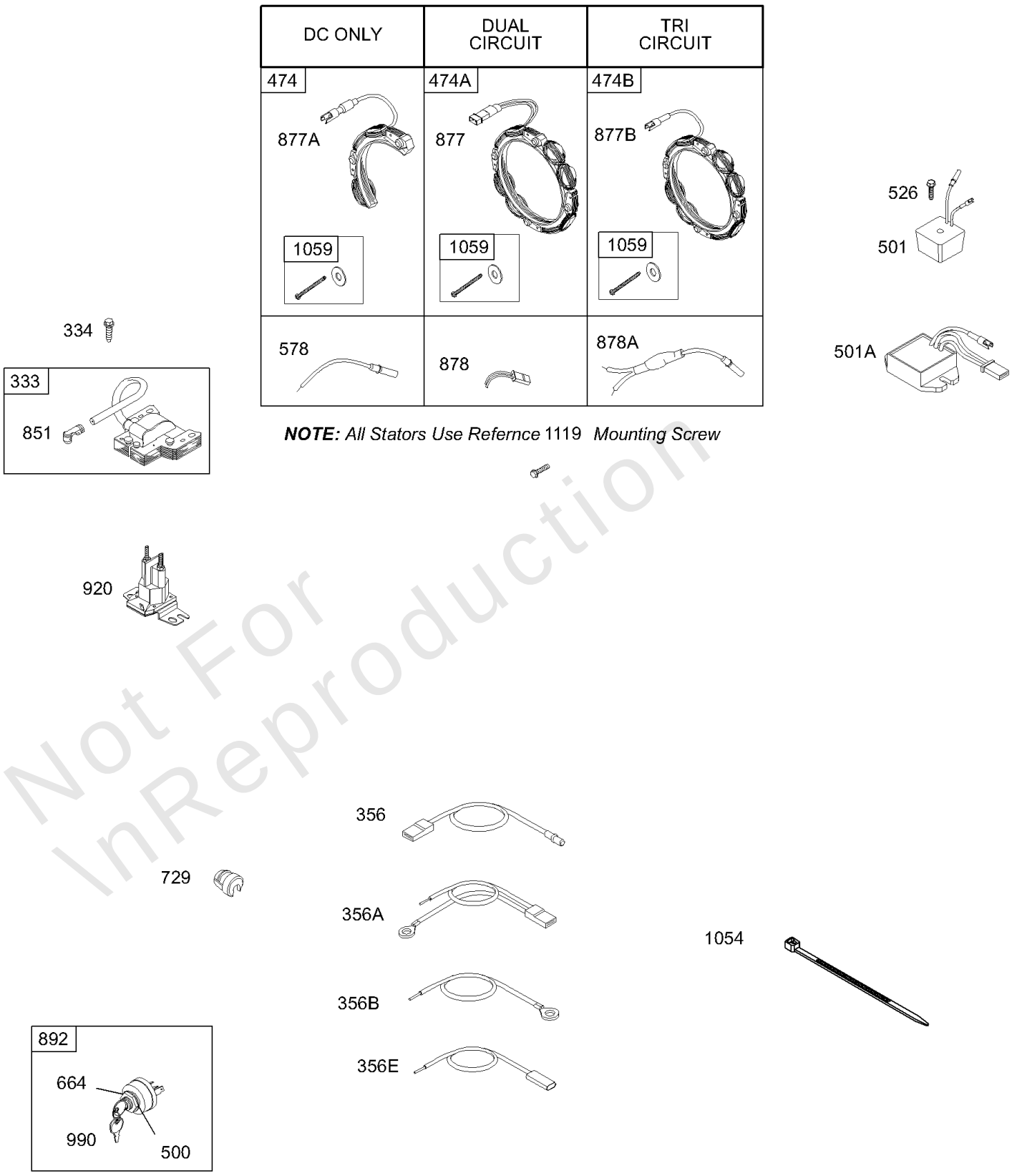

NOTE: *All Stators Use Refernce* 1119 *Mounting Screw*

Not For Reproduction

Alternator, Wires, Regulator

REF NO	PART NO	QTY	DESCRIPTION
333	492341		ARMATURE, Magneto
334	691061		SCREW -(Magneto Armature)
356	690799		WIRE, Stop
356A	398808		WIRE, Stop -(Cut To Required Length)
356B	399222		WIRE, Stop
356E	692390		WIRE, Stop
474	696578		ALTERNATOR -(DC Only)
474A	696459		ALTERNATOR -(Dual Circuit)
474B	696457		ALTERNATOR -(Tri Circuit)
500	691086		WASHER -(Key Switch)
501	691188		REGULATOR -(9 Amp Regulated)
526	690326		SCREW -(Regulator)
578	692306		WIRE ASSEMBLY
664	691087		NUT -(Key Switch)
729	690596		CLIP, Wire
851	493880S		TERMINAL, Spark Plug
877	393456		WIRE/CONNECTOR, Alternator
877A	393814		WIRE/CONNECTOR, Alternator -(10 Amp Regulated)
877B	393537		WIRE/CONNECTOR, Alternator -(Tri Circuit) (9 Amp)
878	691237		HARNESS, Alternator
878A	691955		HARNESS, Alternator
892	692318		SWITCH, Key
920	691656		SOLENOID, Starter
990	691959		SET, Key
1054	280275		TIE, Cable
1059	698516		KIT, Screw/Washer -(Alternator)
1119	691183		SCREW -(Alternator)

Not For Reproduction

Blower Housing, Shrouds, Label Kits

Mfg. No: 28B707-1114-E1

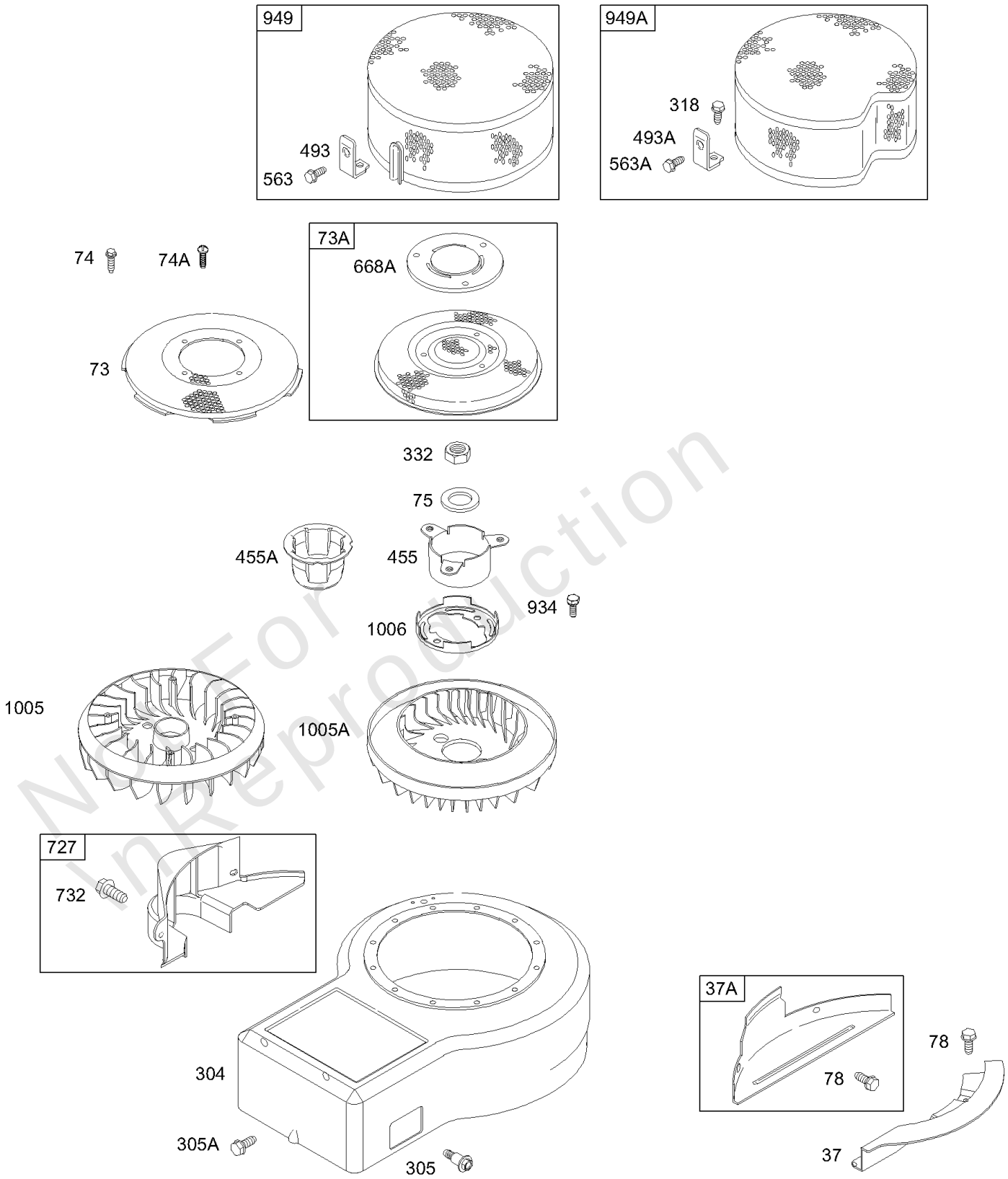

1019 LABEL KIT

1036 EMISSIONS LABEL

Not For Reproduction

Blower Housing, Shrouds, Label Kits

REF NO	PART NO	QTY	DESCRIPTION
37	690456		GUARD, Flywheel
37A	690806		GUARD, Flywheel
73	691191		SCREEN, Rotating
73A	691748		SCREEN, Rotating
74	691627		SCREW -(Rotating Screen)
74A	691655		SCREW -(Rotating Screen)
75	690582		WASHER -(Flywheel)
78	690661		SCREW -(Flywheel Guard)
304	690846		HOUSING, Blower -(Black) -Used Before Code Date 99102500
304	695065		HOUSING, Blower -(Black) -Used After Code Date 99102400
305	691108		SCREW -(Blower Housing)
305A	692127		SCREW -(Blower Housing)
318	691617		SCREW -(Mounting Bracket) (Debris Screen Guard)
332	690662		NUT -(Flywheel)
455	695113		CUP, Flywheel -Used After Code Date 99102400
455A	691173		CUP, Flywheel -Used Before Code Date 99102500
493	695450		BRACKET, Mounting -Used After Code Date 99102400
493A	692825		BRACKET, Mounting -Used Before Code Date 99102500
563	695449		SCREW -(Debris Screen Guard) -Used After Code Date 99102400
563A	690859		SCREW -(Debris Screen Guard) -Used Before Code Date 99102500
668A	691323		SPACER
727	490324		COVER, Starter Drive -(Includes Mounting Hardware)
732	691002		SCREW -(Starter Drive Cover)
934	690372		SCREW -(Fan Retainer)
949	695448		GUARD, Debris Screen -Used After Code Date 99102400
949A	397530		GUARD, Debris Screen -(Rewind Starter) -Used Before Code Date 99102500
1005	695056		FAN, Flywheel -Used After Code Date 99102400
1005A	691905		FAN, Flywheel -Used Before Code Date 99102500
1006	690452		RETAINER, Fan
1019	697764		KIT, Label
1036	694325		LABEL, Emissions -Used After Code Date 99010300 -Used Before Code Date 99100100

Not For Reproduction

Copyright © Briggs and Stratton. All Rights reserved

Blower Housing, Shrouds, Label Kits

Mfg. No: 28B707-1114-E1

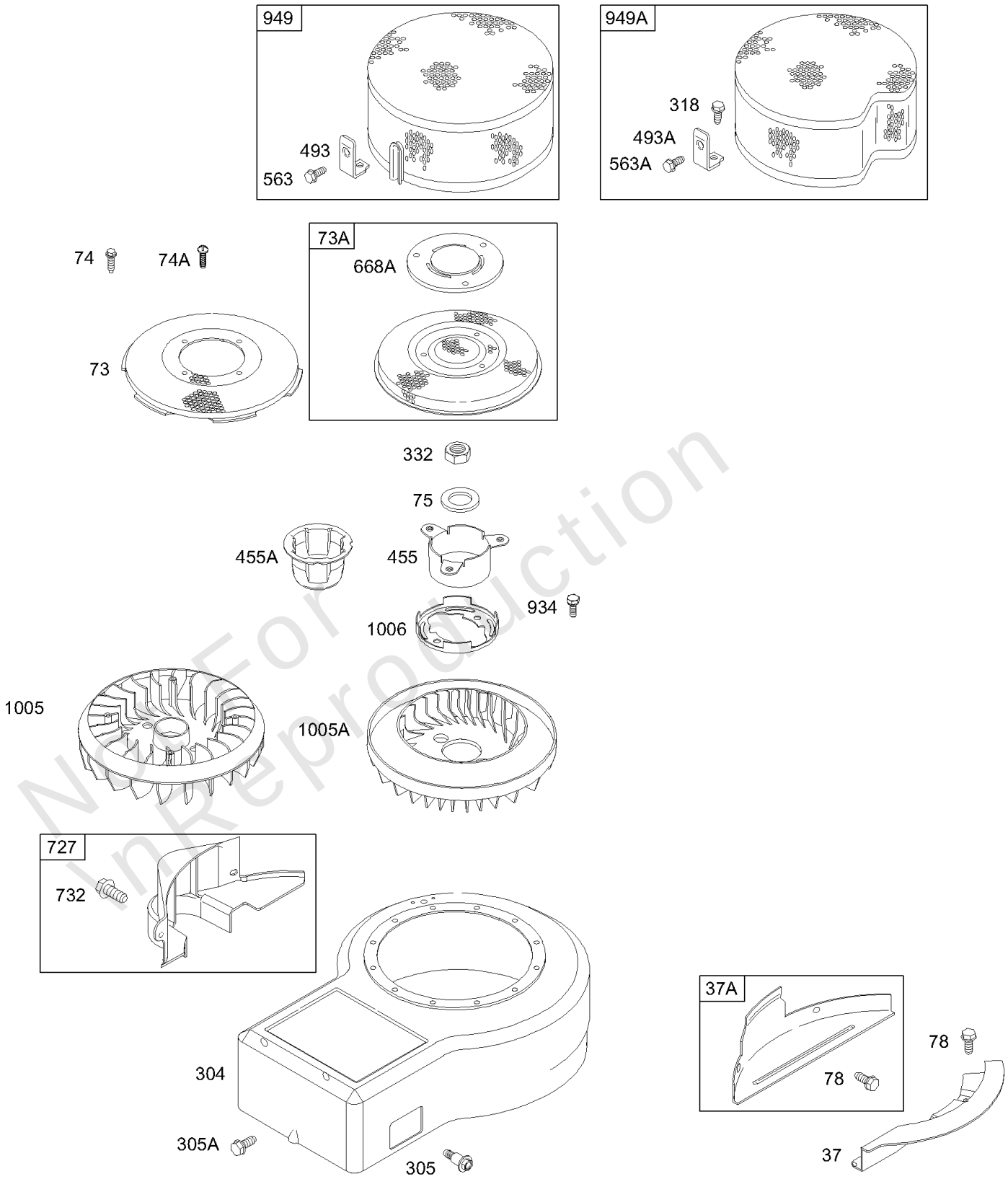

1019 LABEL KIT

1036 EMISSIONS LABEL

Not For Reproduction

REF NO	PART NO	QTY	DESCRIPTION
1036	499362		LABEL, Emissions -Used After Code Date 97063000 -Used Before Code Date 99010400
1036	499361		LABEL, Emissions -Used Before Code Date 97070100
1036	696770		LABEL, Emissions -Used After Code Date 01093000
1036	695699		LABEL, Emissions -Used After Code Date 00063000 -Used Before Code Date 01100100
1036	695036		LABEL, Emissions -Used After Code Date 99093000 -Used Before Code Date 00070100

Not For\nReproduction

Copyright © Briggs and Stratton. All Rights reserved

WALBRO

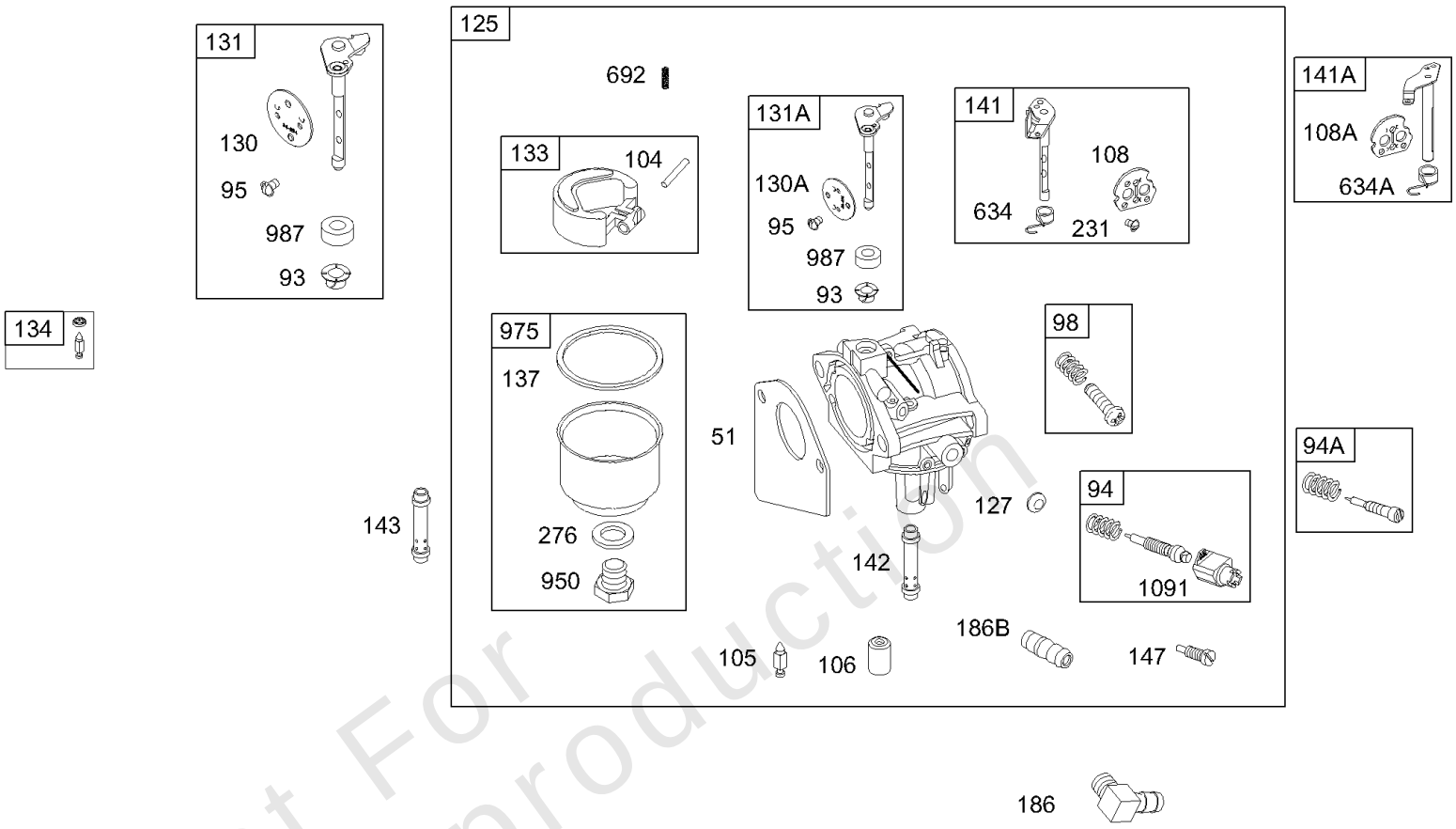

Not For InReproduction

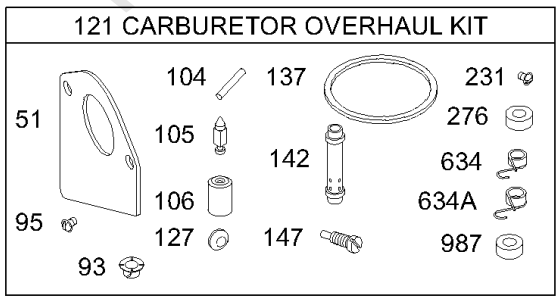

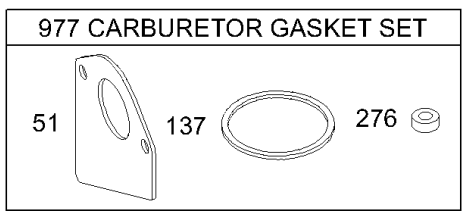

Copyright © Briggs and Stratton. All Rights reserved

Carburetor, Overhaul Kits

REF NO	PART NO	QTY	DESCRIPTION
51	692284		GASKET, Intake
93	690602		BUSHING, Throttle Shaft
94	498030		KIT, Idle Mixture -(Lmt 153154,155,156)
94A	496589		KIT, Idle Mixture -(Lmt 149,150,172,175)
95	691636		SCREW -(Throttle Valve)
98	495800		KIT, Idle Speed -(Idle Speed) (Lmt 54, 55, 91)
104	690525		PIN, Float Hinge
105	231855S		VALVE, Float Needle
106	690577		SEAT, Inlet -(Gravity Feed)
106	691780		SEAT, Inlet -(Pump Feed)
108	690464		VALVE, Choke -(Manual Choke)
108A	692344		VALVE, Choke -(Choke A Matic)
121	499220		KIT, Carburetor Overhaul -(LMT 92, 93, 94, 95, 96, 108, 111, 162, 165, 169)
121	499231		KIT, Carburetor Overhaul -(LMT 97, 99, 133, 135, 136, 157, 158, 159, 160, 166, 168)
121	697884		KIT, Carburetor Overhaul -(696160, 696162, 696164, 696166, 697212, 697213, 697214, 697906)
121	497481		KIT, Carburetor Overhaul -(LMT 63, 65, 66)
125	698171		CARBURETOR -(696160, 696162, 696164, 696166, 697212, 697213, 697214, 697906)
125	498027		CARBURETOR -(LMT 37, 77, 78, 79, 80, 81, 92, 93, 94, 96, 97, 99, 100, 108, 109,110, 111, 133, 134, 135, 136, 157, 158, 162, 165)(Gravity Feed)
125	499158		CARBURETOR -(LMT 159, 166, 167, 168, 169)(Pump Feed)
127	695005		PLUG, Welch
127	694524		PLUG, Welch -(696160, 696162, 696164, 696166, 697212, 697213, 697214, 697906)
130	690468		VALVE, Throttle -(LMT 111, 169)
130A	691750		VALVE, Throttle
131	494885		KIT, Throttle Shaft -(LMT 111, 169)
131A	494379		KIT, Throttle Shaft -(Manual Choke)
133	494381		FLOAT, Carburetor
134	494788		KIT, Needle/Seat -(LMT 5, 6)
137	281165S		GASKET, Float Bowl
141	495097		KIT, Choke Shaft -(Manual Choke)
141A	495931		KIT, Choke Shaft -(Choke A Matic)
142	691425		NOZZLE, Carburetor -(Standard) (LMT 37, 39, 41, 77, 79, 81, 157, 159)
142	691434		NOZZLE, Carburetor -(Standard) (LMT 92, 93, 94, 96)
142	697592		NOZZLE, Carburetor -(Standard) (LMT 696160, 696162, 696164, 696166)

Not For Reproduction

Copyright © Briggs and Stratton. All Rights reserved

WALBRO

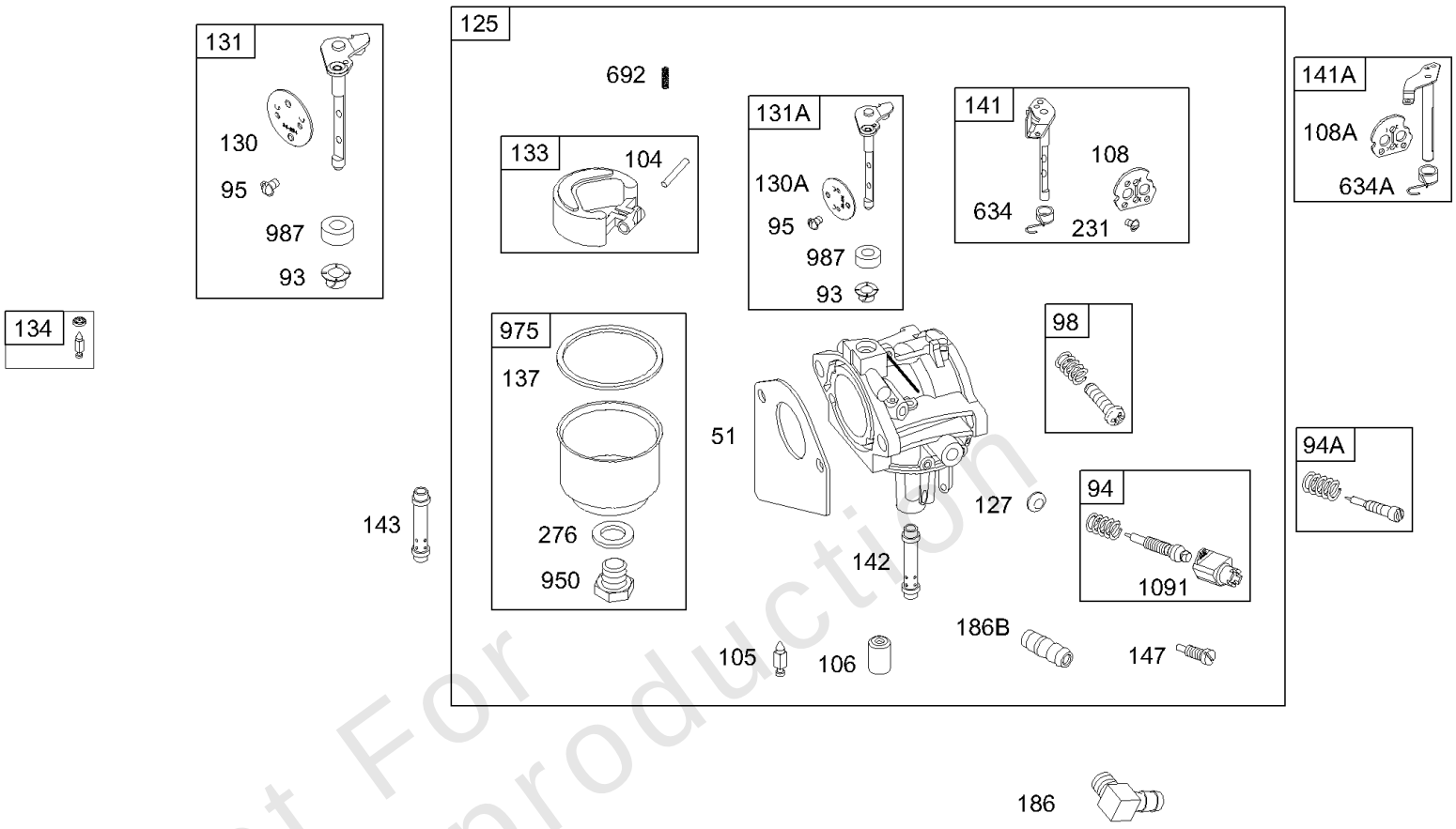

Not For InReproduction

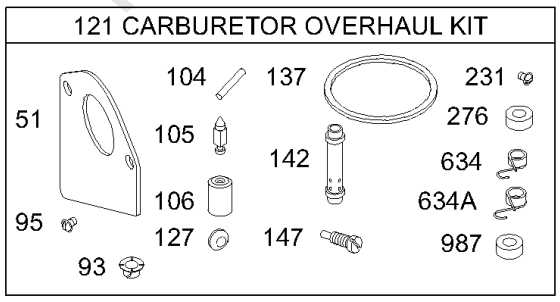

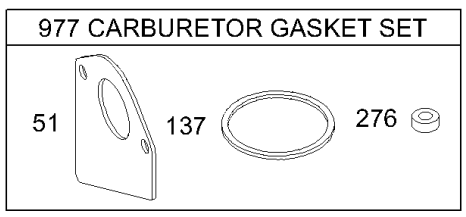

Copyright © Briggs and Stratton. All Rights reserved

Carburetor, Overhaul Kits

REF NO	PART NO	QTY	DESCRIPTION
142	497568		NOZZLE, Carburetor -(Standard) (LMT 97, 99, 100)
142	497860		NOZZLE, Carburetor -(Standard) (LMT 63, 65, 66)
142	498545		NOZZLE, Carburetor -(Standard) (LMT 108, 111)
142	499037		NOZZLE, Carburetor -(Standard) (LMT 162, 165, 169)
142	499039		NOZZLE, Carburetor -(Standard) (LMT 166, 167, 168)
143	498258		NOZZLE, Carburetor -(High Altitude) (LMT 63, 65, 66, 108, 111, 133, 135, 136)
143	499040		NOZZLE, Carburetor -(High Altitude) (LMT 162, 165, 166, 167, 168, 169)
143	497737		NOZZLE, Carburetor -(High Altitude) (LMT 92)
143	497970		NOZZLE, Carburetor -(High Altitude) (LMT 97, 98)
147	497472		JET, Pilot -(LMT 63, 65, 66, 97, 99, 100, 133, 135, 136)
147	231983		JET, Pilot -(LMT 136)
186	692317		CONNECTOR, Hose
186B	698174		CONNECTOR, Hose
231	691636		SCREW -(Choke Valve)
276	692255		WASHER, Sealing
634	690801		SPRING/SEAL ASSEMBLY -(Manual Choke)
634A	690802		SPRING/SEAL ASSEMBLY -(Choke A Matic)
692	690572		SPRING, Detent
950	691657		SCREW -(Float Bowl)
975	495933		BOWL, Float -(Float Bowl)
977	690192		SET, Carburetor Gasket -(Walbro)
987	691326		SEAL, Choke/Throttle Shaft
1091	691333		CAP, Limiter

Not For Reproduction

Copyright © Briggs and Stratton. All Rights reserved

Cylinder, Piston/Ring, Crankshaft, Gasket Kits, Sump

Mfg. No: 28B707-1114-E1

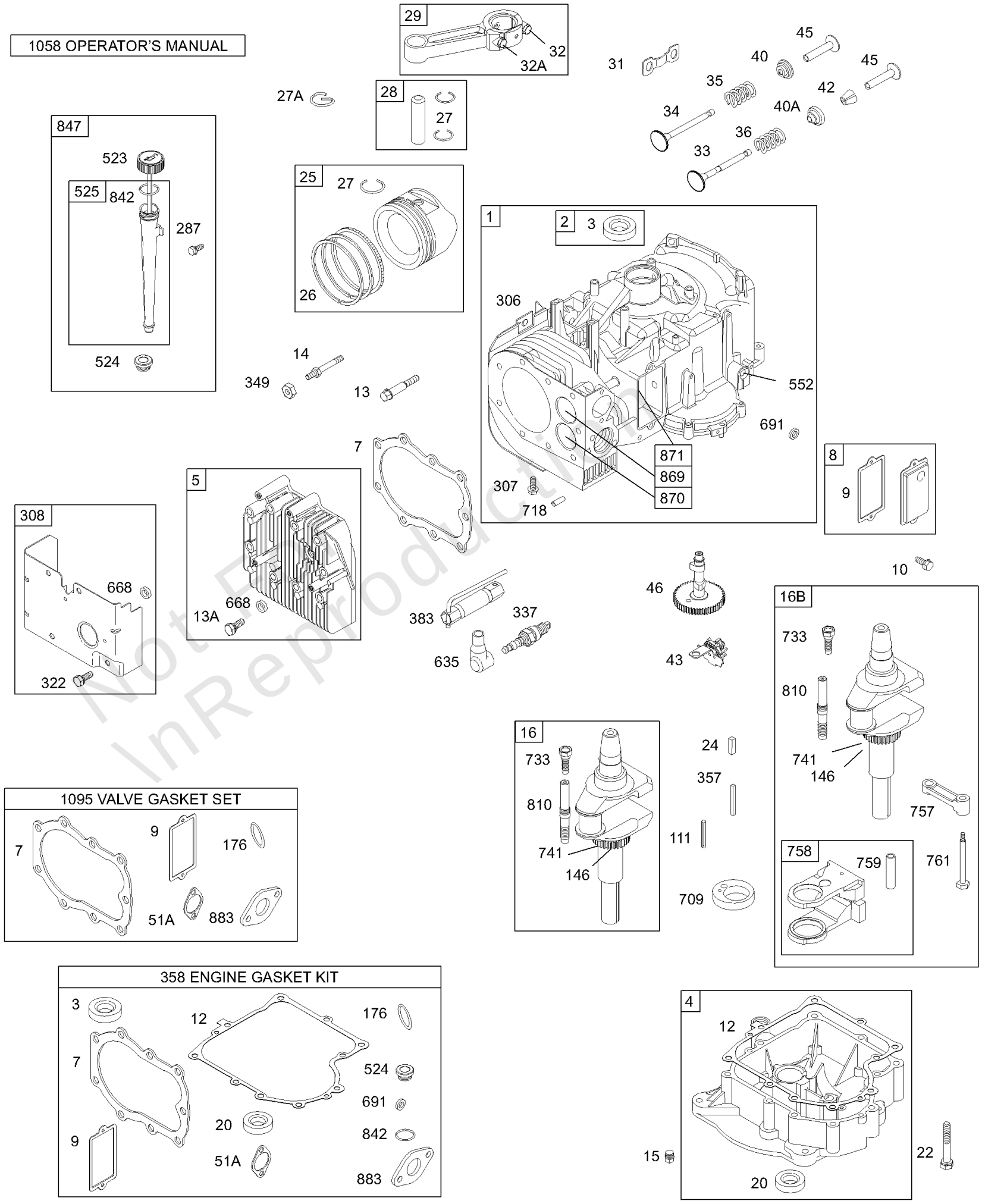

Not For Reproduction

Cylinder, Piston/Ring, Crankshaft, Gasket Kits, Sump

REF NO	PART NO	QTY	DESCRIPTION
1	496413		CYLINDER ASSEMBLY
2	399265		KIT, Bushing/Seal -(Magneto Side)
3	391086S		SEAL, Oil -(Magneto Side)
4	494238		SUMP, Engine
5	494240		HEAD, Cylinder
7	271866S		GASKET, Cylinder Head
8	495735		BREATHER ASSEMBLY
9	27803S		GASKET, Breather
10	691666		SCREW -(Breather Assembly)
12	692405		GASKET, Crankcase -(.009)
12	692406		GASKET, Crankcase -(.005)
12	692226		GASKET, Crankcase -(.015)
13	690904		SCREW -(Cylinder Head)
13A	691681		SCREW -(Cylinder Head)
14	691109		STUD -(Cylinder Head)
15	690946		PLUG, Oil Drain
16	693944		CRANKSHAFT -Used After Code Date 95073100
16B	693653		CRANKSHAFT -Used Before Code Date 95080100
20	291675S		SEAL, Oil -(PTO Side)
22	692125		SCREW -(Crankcase Cover/Sump)
24	222698S		KEY, Flywheel
25	499292		PISTON ASSEMBLY -(.020 Oversize) -Used Before Code Date 01060700
25	696397		PISTON ASSEMBLY -(Standard) -Used After Code Date 01060600
25	696399		PISTON ASSEMBLY -(.020 Oversize) -Used After Code Date 01060600
25	696400		PISTON ASSEMBLY -(.030 Oversize) -Used After Code Date 01060600
25	499284		PISTON ASSEMBLY -(Standard) -Used Before Code Date 01060700
26	499996		SET, Ring -(Standard) -Used Before Code Date 01060700
26	499998		SET, Ring -(.020 Oversize) -Used Before Code Date 01060700
26	696403		SET, Ring -(Standard) -Used After Code Date 01060600
26	696404		SET, Ring -(.010 Oversize) -Used After Code Date 01060600

Not For Reproduction

Copyright © Briggs and Stratton. All Rights reserved

Cylinder, Piston/Ring, Crankshaft, Gasket Kits, Sump

Mfg. No: 28B707-1114-E1

1058 OPERATOR'S MANUAL

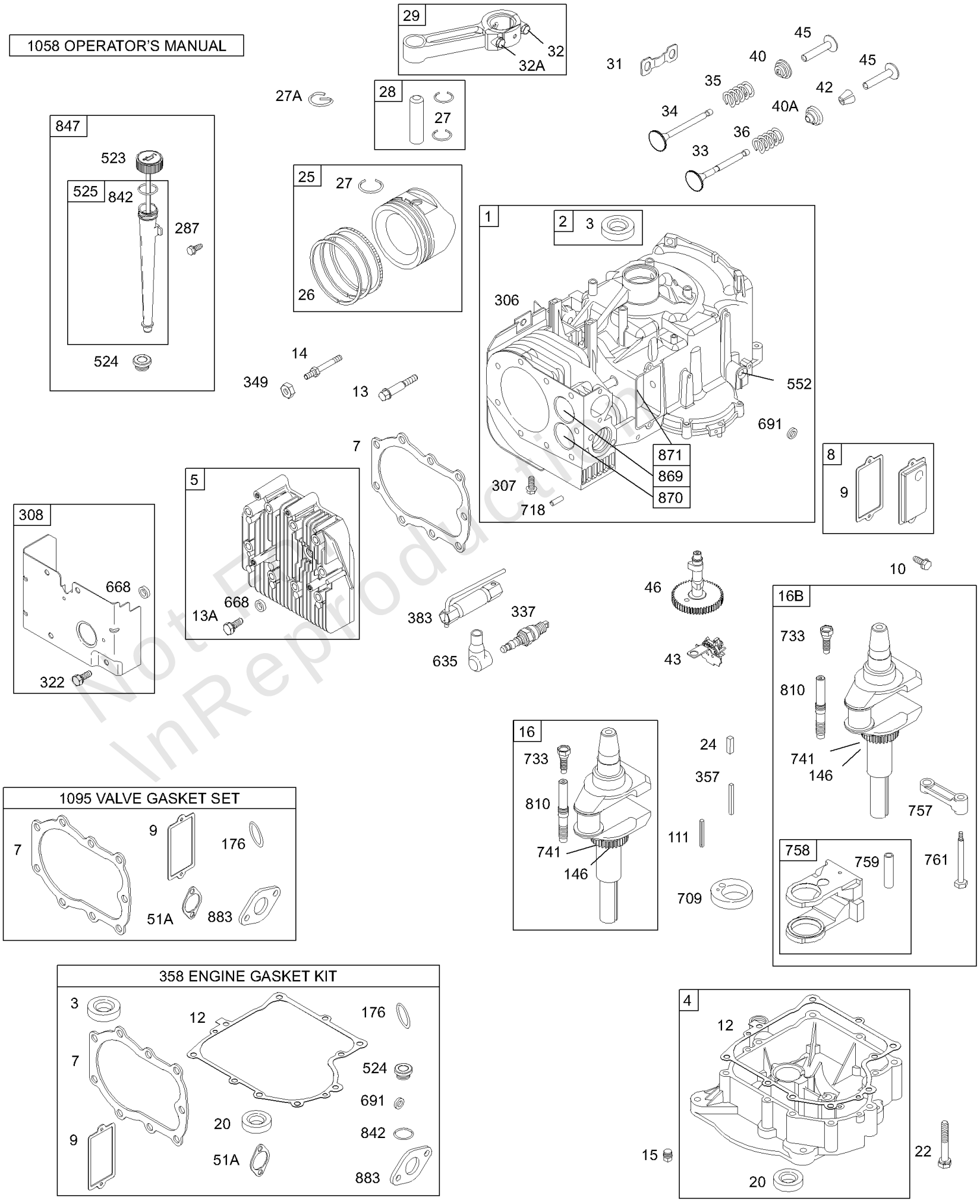

Not For Reproduction

REF NO	PART NO	QTY	DESCRIPTION
26	696405		SET, Ring -(.020 Oversize) -Used After Code Date 01060600
26	696406		SET, Ring -(.030 Oversize) -Used After Code Date 01060600
26	392331		SET, Ring -(Standard)(Chrome) -Used Before Code Date 01060700
27	691299		LOCK, Piston Pin -Used After Code Date 95101500
27A	691792		LOCK, Piston Pin -Used Before Code Date 95101600
28	391286		PIN, Piston -(.005 Oversize) -Used Before Code Date 95101600
28	498319		PIN, Piston -(Standard) -Used After Code Date 95101500
28	498320		PIN, Piston -(.005 Oversize) -Used After Code Date 95101500
28	299691		PIN, Piston -(Standard) -Used Before Code Date 95101600
29	494504S		ROD, Connecting -(Standard)
29	495490		ROD, Connecting -(.020 Undersize)
31	222299		LOCK, Rod Screw -(1 7/8)
32	690356		SCREW -(Connecting Rod) (1 7/8)
32A	690348		SCREW -(Connecting Rod) (1 5/8)
33	262246S		VALVE, Exhaust
34	262247S		VALVE, Intake
35	691605		SPRING, Valve -(Intake)
36	691597		SPRING, Valve -(Exhaust)
40	690656		RETAINER, Valve -(Intake)
40A	691939		RETAINER, Valve -(Exhaust)
42	494553		KEEPER, Valve -(Exhaust)
43	691968		SLINGER, Governor/Oil
45	691811		TAPPET, Valve
46	697668		CAMSHAFT
51A	272554S		GASKET, Intake
111	691679		PIN, Retainer
146	691639		KEY, Woodruff
176	691917		SEAL, O-Ring -(Air Cleaner Base)
287	691002		SCREW -(Dipstick Tube)
306	698477		SHIELD, Cylinder
307	691003		SCREW -(Cylinder Shield)

Not For Reproduction

Copyright © Briggs and Stratton. All Rights reserved

Cylinder, Piston/Ring, Crankshaft, Gasket Kits, Sump

Mfg. No: 28B707-1114-E1

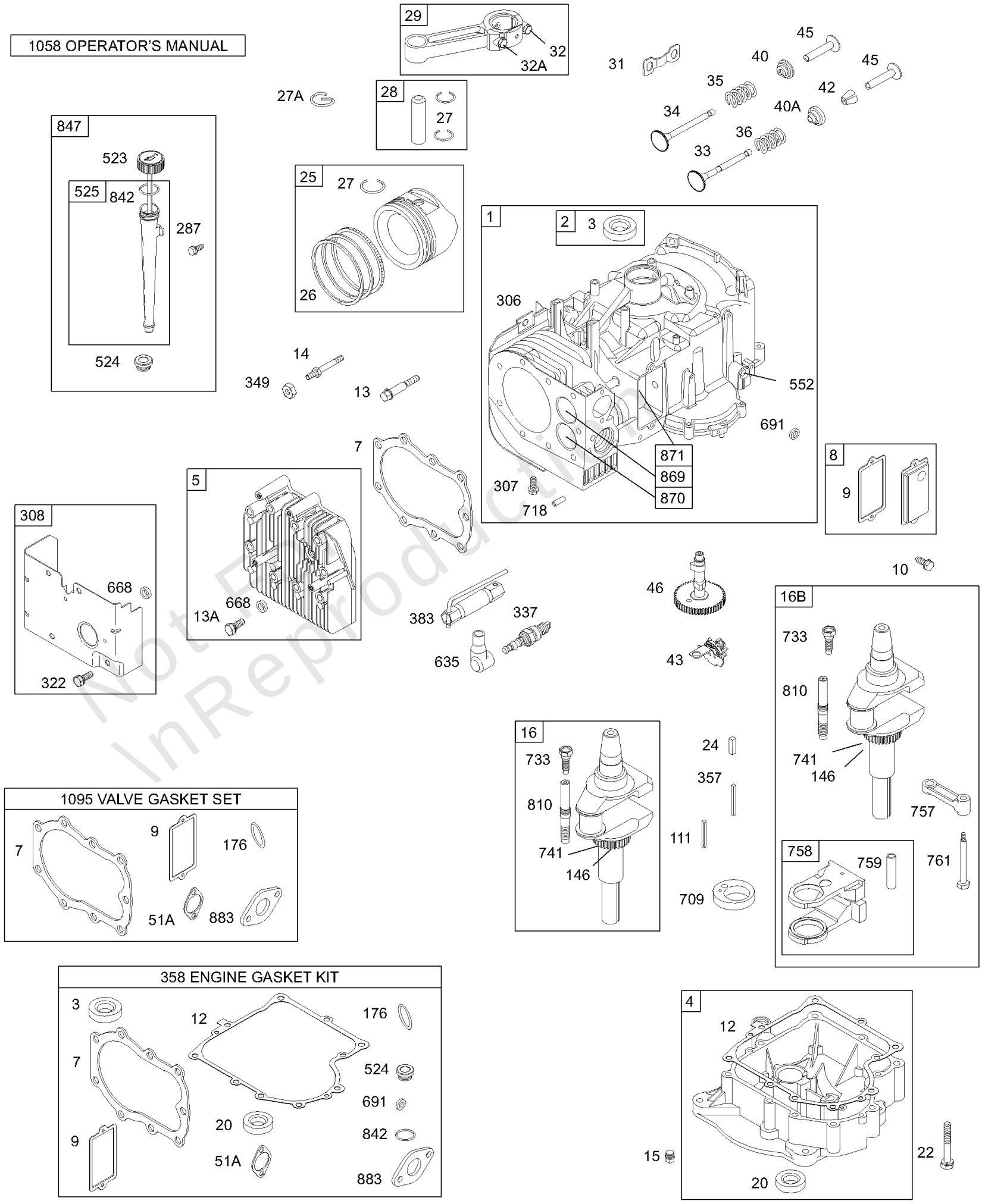

Not For Reproduction

Cylinder, Piston/Ring, Crankshaft, Gasket Kits, Sump

REF NO	PART NO	QTY	DESCRIPTION
308	491490		COVER, Cylinder Head
322	691108		SCREW -(Cylinder Head Cover)
337	802592S		PLUG, Spark -(Resistor)
349	691105		LOCKNUT -(Cylinder Head Cover)
357	691483		KEY, Drive Pulley
358	494241		GASKET SET, Engine
383	89838S		WRENCH, Spark Plug
523	692013		DIPSTICK
524	281370S		SEAL, O-Ring -(Dipstick Tube)
525	690841		TUBE, Dipstick
552	491986		BUSHING, Governor Crank -(1/4 I.D.)
635	66538S		BOOT, Spark Plug
668	690510		SPACER
691	692407		SEAL, Governor Shaft
709	262243		ECCENTRIC
718	690959		PIN, Locating
733	691658		SCREW -(Crankshaft Extension)
741	691284		GEAR, Timing
757	691714		LINK, Counterweight -(-Used After Code Date 78100411)
758	692423		COUNTERWEIGHT
759	691239		PIN, Counterweight
761	691096		SCREW -(Counterweight)
810	691779		EXTENSION, Crankshaft
842	691870		SEAL, O-Ring -(Dipstick Tube)
847	496367		DIPSTICK/TUBE ASSEMBLY
869	691802		SEAT, Valve -(Intake)
870	691844		SEAT, Valve -(Exhaust)
871	231218		BUSHING, Valve Guide -(Intake)(Brass)
871	261961		BUSHING, Valve Guide -(Exhaust)
883	692236		GASKET, Exhaust
1058	274787		MANUAL, Operator's
1095	498539		GASKET SET, Valve

Not For Reproduction

Copyright © Briggs and Stratton. All Rights reserved

Mfg. No: 28B707-1114-E1

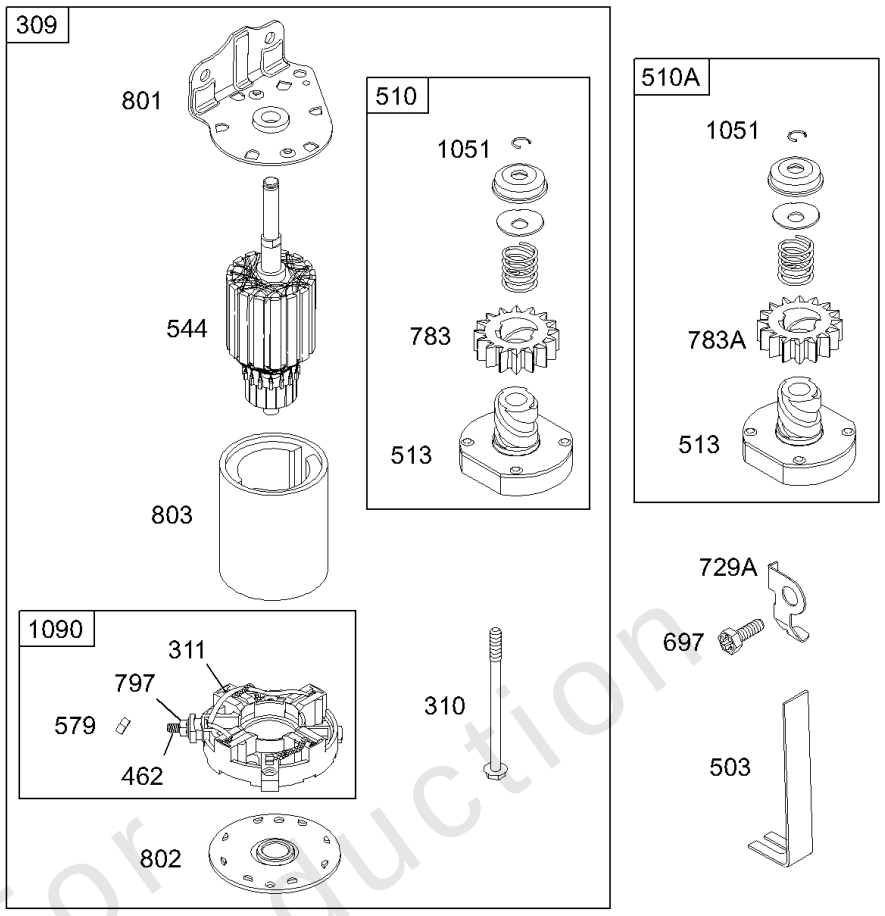

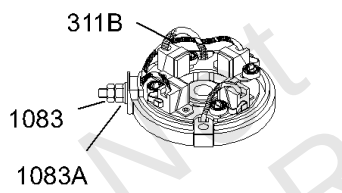

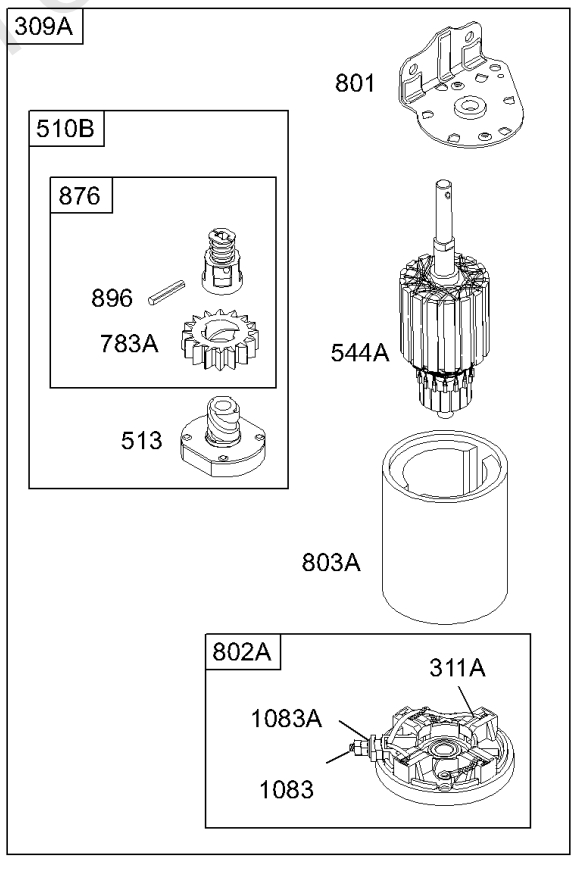

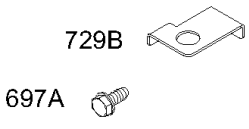

NOTE: *For Replacement Starter Motor, See Reference 309.*

Not For Reproduction

Electric Starters

REF NO	PART NO	QTY	DESCRIPTION
309	693054		MOTOR, Starter -(3 5/8) (Aluminum Ring Gear)
309	693551		MOTOR, Starter -(3 5/8 Housing Length For Steel Ring Gear Only)
309	693552		MOTOR, Starter -(4 3/8 Housing Length For Steel Ring Gear Only)
309	497401		MOTOR, Starter -(4 3/8 Housing Length For Plastic Ring Gear Only)
309	497595		MOTOR, Starter -(3 5/8) (Plastic Ring Gear)
309	499521		MOTOR, Starter -(4 3/8 Housing Length For Aluminum Ring Gear Only)
309A	-----		Motor-Starter -(For Replacement Starter Motor, Order Reference 309)
310	690323		BOLT -(Starter Motor) (3 5/8" Housing Length)
310	691263		BOLT -(Starter Motor) (4 3/8 Housing)
311	497608		SET, Brush
311A	395538		SET, Brush -(3 5/8 Housing)
311B	490311		SET, Brush -(4 9/16 Housing)
462	691261		WASHER -(Starter Cable)
503	691532		STRAP, Starter
510	693699		DRIVE, Starter -(Used With Steel Ring Gear)
510A	696541		DRIVE, Starter -(Used With Aluminum And Plastic Ring Gears)
510B	696540		DRIVE, Starter
513	692024		CLUTCH, Drive
544	692034		ARMATURE, Starter -(3 5/8 Housing)
544A	390837		ARMATURE, Starter -(3 5/8 Housing)
544A	490309		ARMATURE, Starter -(4 3/8 Housing)
579	691029		NUT -(Starter Cable)
697	690372		SCREW -(Drive Cap)
697A	691058		SCREW -(Drive Cap)
729A	691224		CLIP, Wire
729B	224723		CLIP, Wire
783	693713		GEAR, Pinion -(DC)(10-16 AMP)
783A	695708		GEAR, Pinion -(Aluminum And Plastic Ring Gears)
797	693167		NUT -(Brush Retainer)
801	691283		CAP, Drive
802	691286		CAP, End
802A	395537		CAP, End -(3 5/8 Housing)
803	693757		HOUSING, Starter -(3-5/8 Housing)(4 3/8 Housing Length Serviced By ReferenceNumber 309)

Not For Reproduction

Copyright © Briggs and Stratton. All Rights reserved

Mfg. No: 28B707-1114-E1

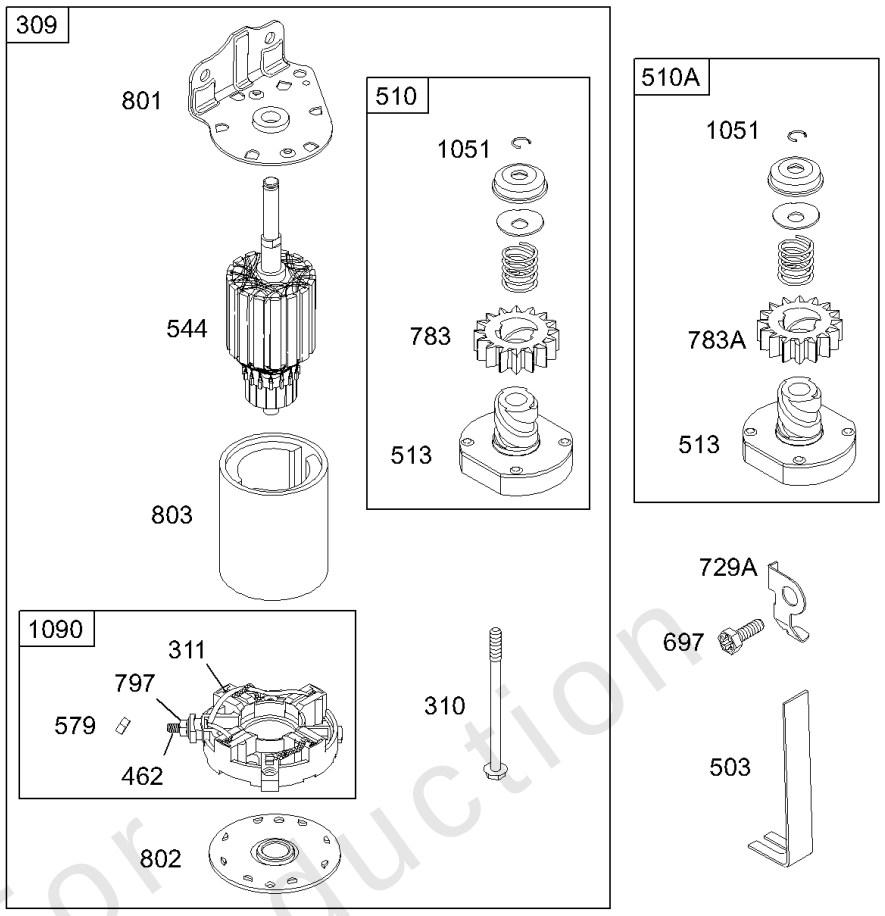

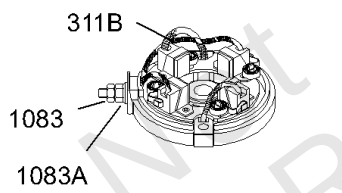

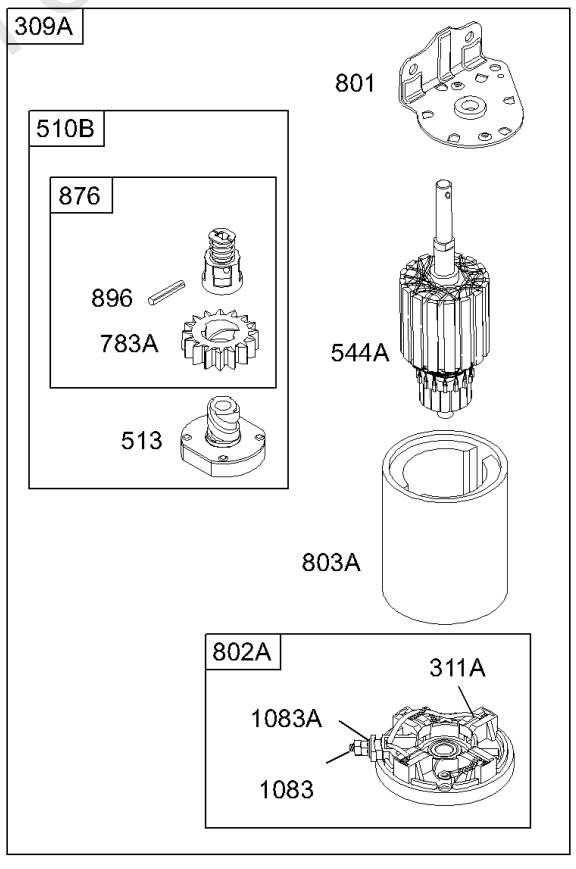

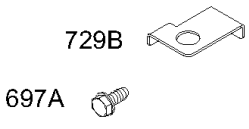

NOTE: *For Replacement Starter Motor, See Reference 309.*

Not For InReproduction

Copyright © Briggs and Stratton. All Rights reserved

Electric Starters

REF NO	PART NO	QTY	DESCRIPTION
803A	494205		HOUSING, Starter -(4 3/8 Housing)
803A	398159		HOUSING, Starter -(3 5/8 Housing)
876	696539		KIT, Pinion Spring
896	691641		PIN, Drive Retainer
1051	691265		RING, Retaining
1083	691626		NUT -(End Cap)
1083A	690958		NUT -(End Cap) (Serrated)
1090	691293		RETAINER, Brush

Not For\nReproduction

Fuel Tank, Hoses, Pump, Controls

Mfg. No: 28B707-1114-E1

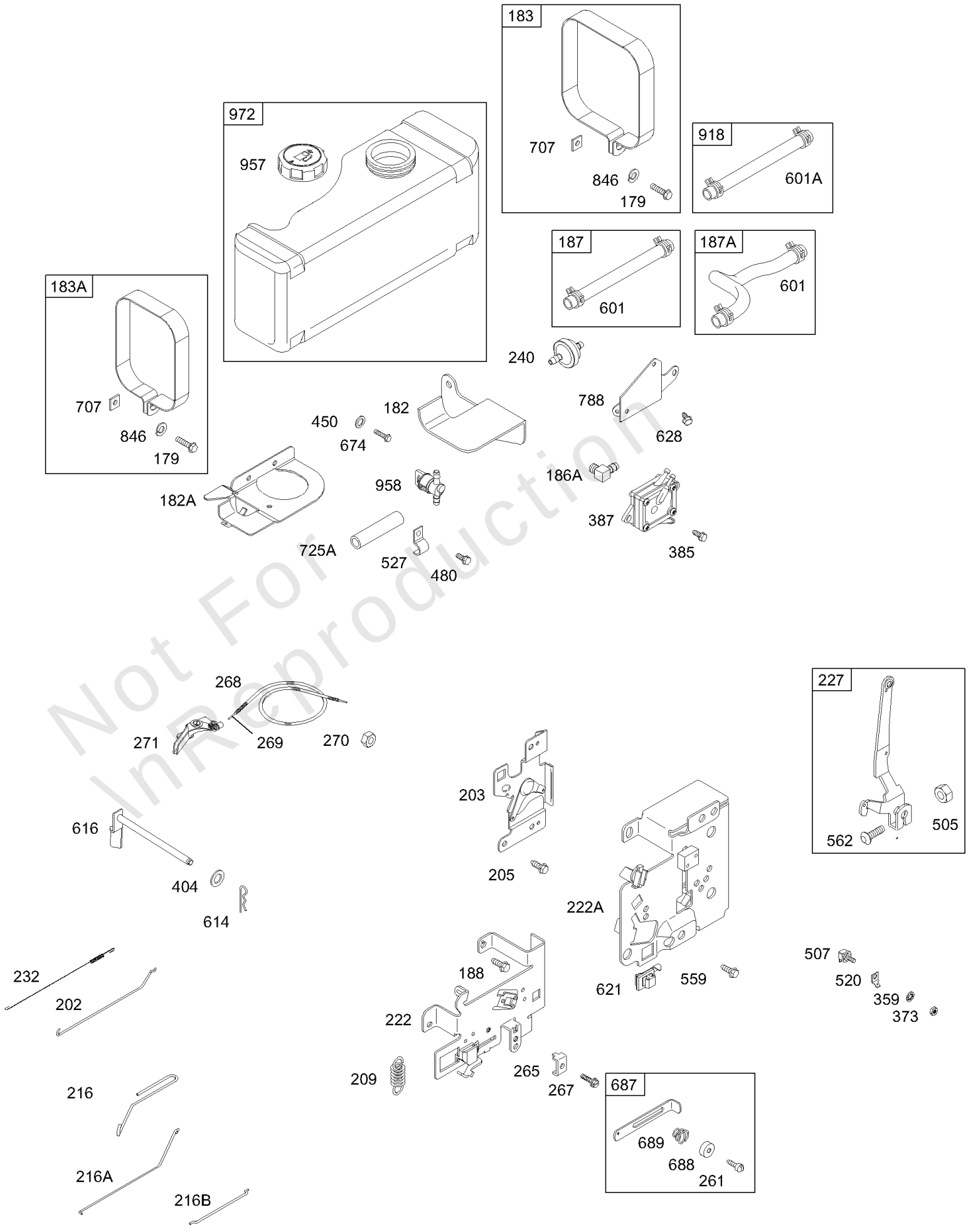

Not For Reproduction

Fuel Tank, Hoses, Pump, Controls

REF NO	PART NO	QTY	DESCRIPTION
179	692331		SCREW -(Fuel Tank Strap)
182	690443		BRACKET, Fuel Tank -(Right Hand)
182A	692535		BRACKET, Fuel Tank -(Left Hand)
183	698459		STRAP, Fuel Tank -(Right Hand)
183A	692030		STRAP, Fuel Tank -(Left Hand)
186A	691609		CONNECTOR, Hose
187	296004		LINE, Fuel -(Cut To Required Length)
187A	691371		LINE, Fuel -(Molded)
188	691693		SCREW -(Control Bracket)
202	691841		LINK, Mechanical Governor
203	691381		CRANK, Bell
205	691693		SCREW -(Bell Crank)
209	690480		SPRING, Governor -(Red)
209	691798		SPRING, Governor -(Brown)
216	691840		LINK, Choke
216A	690574		LINK, Choke
216B	691281		LINK, Choke
222	694042		BRACKET, Control
227	691374		LEVER, Governor Control
232	691842		SPRING, Governor Link
240	298090S		FILTER, Fuel -(Red)
240	394358S		FILTER, Fuel -(White)
261	690278		SCREW -(Control Slide)
265	691024		CLAMP, Casing
267	690804		SCREW -(Casing Clamp)
268	691025		CASING, Control Wire -(72" Long)(Cut To Required Length)
268	691072		CASING, Control Wire -(48)(Cut To Required Length)
269	691026		WIRE, Control -(78" Long)(Cut To Required Length)
269	691589		WIRE, Control -(54)(Cut To Required Length)
270	691027		NUT -(Control Wire Casing)
271	691028		LEVER, Control
359	691077		WASHER -(Ground Terminal)
373	691612		NUT -(Ground Terminal)
385	692198		SCREW -(Fuel Pump)
387	808656		PUMP, Fuel

Not For Reproduction

Copyright © Briggs and Stratton. All Rights reserved

Fuel Tank, Hoses, Pump, Controls

Mfg. No: 28B707-1114-E1

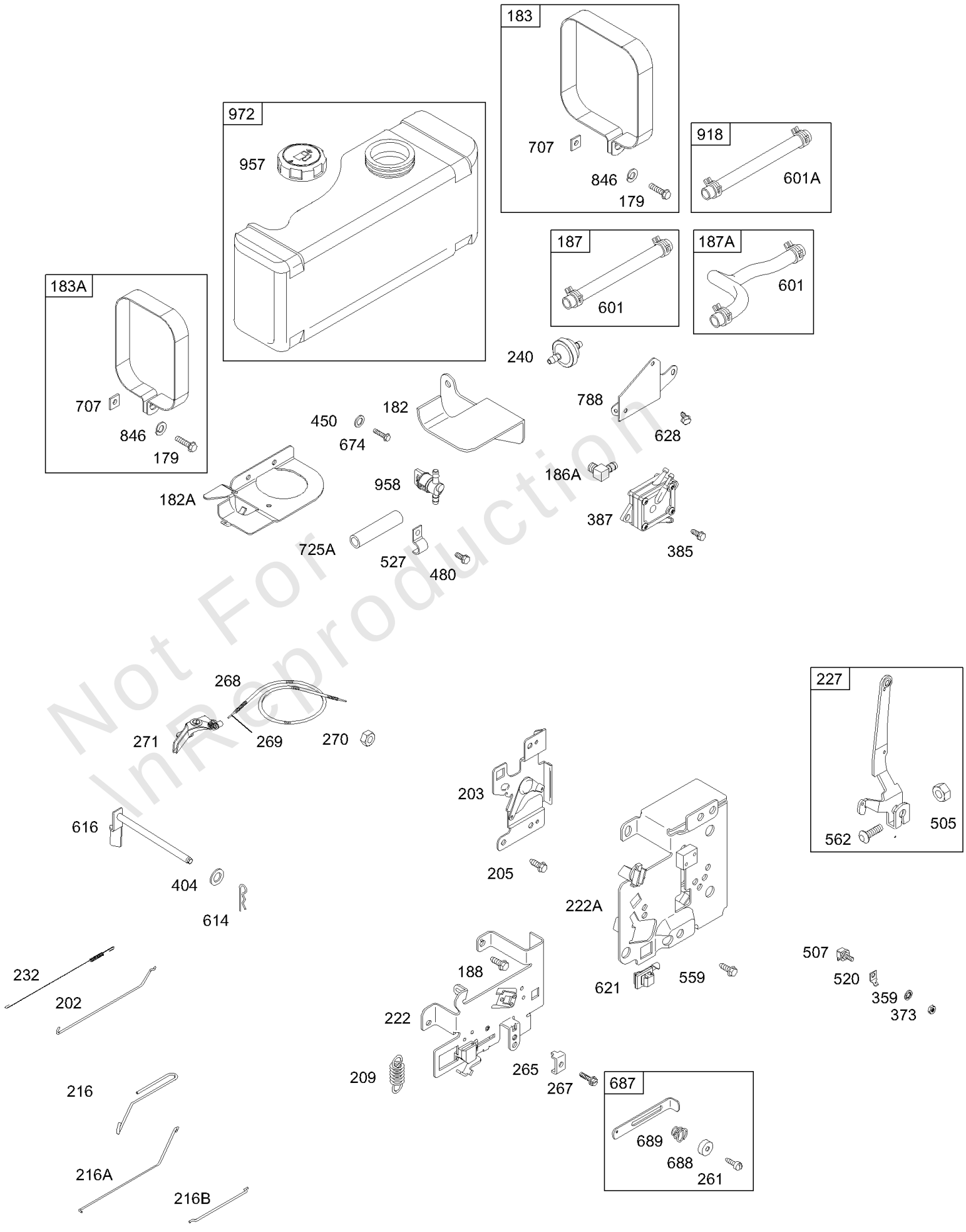

Not For Production

Fuel Tank, Hoses, Pump, Controls

REF NO	PART NO	QTY	DESCRIPTION
404	691691		WASHER -(Governor Crank)
450	691261		WASHER -(Fuel Tank Bracket)
480	690664		SCREW -(Tube Clamp)
505	691251		NUT -(Governor Control Lever)
507	691972		INSULATOR
520	691084		TERMINAL, Ground
527	690394		CLAMP, Hose
559	690661		SCREW -(Remote Choke Stop)
562	691119		BOLT -(Governor Control Lever)
601	95162S		CLAMP, Hose -(Green)
601A	691638		CLAMP, Hose -(Black)
614	691620		PIN, Cotter
616	692012		CRANK, Governor
621	692310		SWITCH, Stop
628	690661		SCREW -(Fuel Pump Bracket)
674	690341		SCREW -(Fuel Tank Bracket) (Rewind Starter)
674	691058		SCREW -(Fuel Tank Bracket)
687	691949		SLIDE, Control
688	690395		CAP, Friction
689	690529		SPRING, Friction
707	690279		NUT -(Fuel Tank Strap)
725A	690403		SHIELD, Heat
788	690458		BRACKET, Fuel Pump
846	690371		WASHER -(Fuel Tank Strap)
918	393815		HOSE, Vacuum -(Cylinder To Impulse Pump)(Cut To Required Length)
957	493988S		CAP, Fuel Tank -(Plastic)
958	698183		VALVE, Fuel Shut Off -(Plastic)
972	390225		TANK, Fuel -(Plastic) (3 Quart Tank)

Not For Reproduction

Replacement Engine

REF NO	PART NO	QTY	DESCRIPTION
	2179073025	1	Replacement Engine
	-----		Top No-Load Speed: 3300 -Trim: ALL
	-----		Service Note: If the original engine is equipped with a Six Pin Wiring Harness transfer to the replacement engine.
	-----		Service Note: If the replacement engine supersedes to or is a Model 210000 series engine, refer to the illustrations located after the conversion data for this model series. The overall dimensions which differ, are shown in the illustrations.
	-----		Service Note: If after making a visual inspection and it is determined the Model 210000 series engine cannot be used because of equipment interference, the original engine should be repaired with a short block and/or individual parts.

Not For\nReproduction

Mfg. No: 28B707-1114-E1

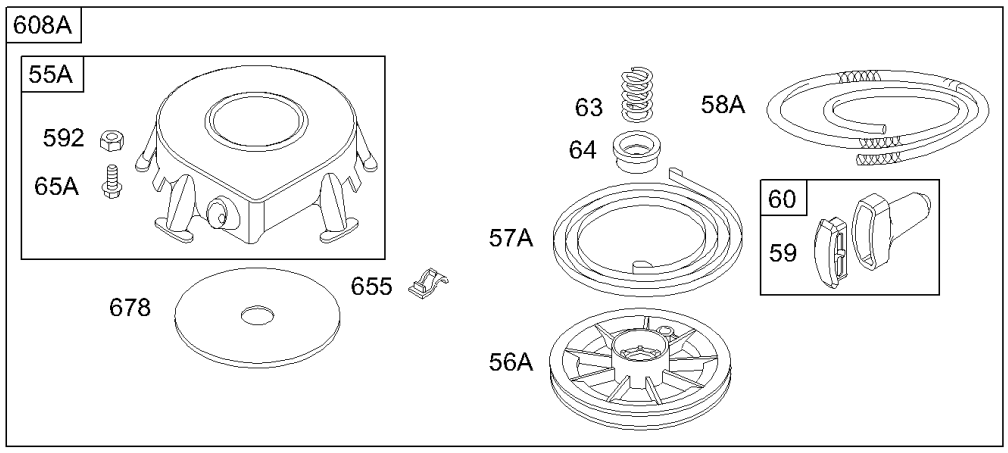

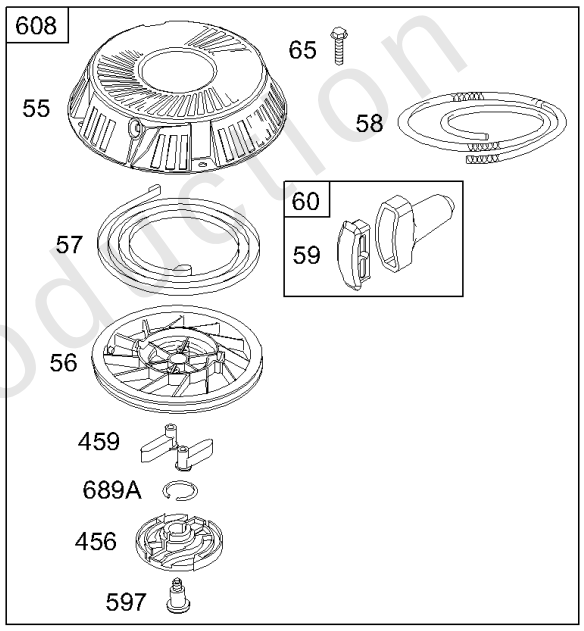

Not For Reproduction

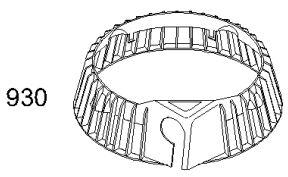

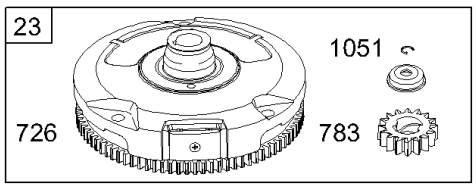

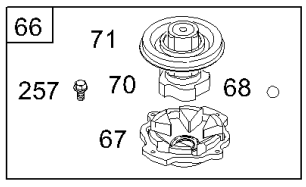

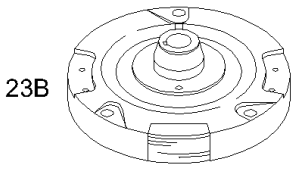

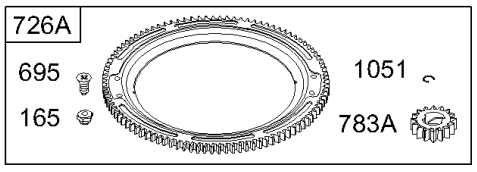

Copyright © Briggs and Stratton. All Rights reserved

Rewind Starter, Flywheel

REF NO	PART NO	QTY	DESCRIPTION
23	693557		FLYWHEEL -(Steel Ring Gear)
23B	693555		FLYWHEEL
55	695130		HOUSING, Rewind Starter -Used After Code Date 99102400
55A	393576		HOUSING, Rewind Starter -Used Before Code Date 99102500
56	695129		PULLEY, Starter -Used After Code Date 99102400
56A	295871		PULLEY, Starter -(63 Rope) -Used Before Code Date 99102500
57	695131		SPRING, Rewind Starter -Used After Code Date 99102400
57A	490179		SPRING, Rewind Starter -Used Before Code Date 99102500
58	695132		ROPE, Starter -(.2" Diameter, 59" Long)(Cut To Required Length) -Used After Code Date 99102400
58A	692188		ROPE, Starter -(63)(Cut to Required Length) -Used Before Code Date 99102500
59	490653		INSERT, Grip
60	490652		HANDLE, Starter Rope
63	690547		SPRING, Ratchet -Used Before Code Date 99102500
64	691920		ADAPTER, Ratchet Spring -Used Before Code Date 99102500
65	695453		SCREW -(Rewind Starter) -Used After Code Date 99102400
65A	690837		SCREW -(Rewind Starter) -Used Before Code Date 99102500
66	399671		CLUTCH, Starter -Used Before Code Date 99102500
67	394897		HOUSING, Clutch -Used Before Code Date 99102500
68	691604		BALL, Clutch -Used Before Code Date 99102500
70	691945		RATCHET, Clutch -Used Before Code Date 99102500
71	691359		COVER, Ratchet -Used Before Code Date 99102500
165	693148		NUT -(Ring Gear)
257	691660		SCREW -(Starter Clutch)
363	19203		PULLER, Flywheel
456	695128		PLATE, Pawl Friction -Used After Code Date 99102400
459	281505S		PAWL, Ratchet -Used After Code Date 99102400
592	690800		NUT -(Rewind Starter) -Used Before Code Date 99102500
597	691696		SCREW -(Pawl Friction Plate) -Used After Code Date 99102400
608	695058		STARTER, Rewind -Used After Code Date 99102400

Not For Reproduction

Copyright © Briggs and Stratton. All Rights reserved

Mfg. No: 28B707-1114-E1

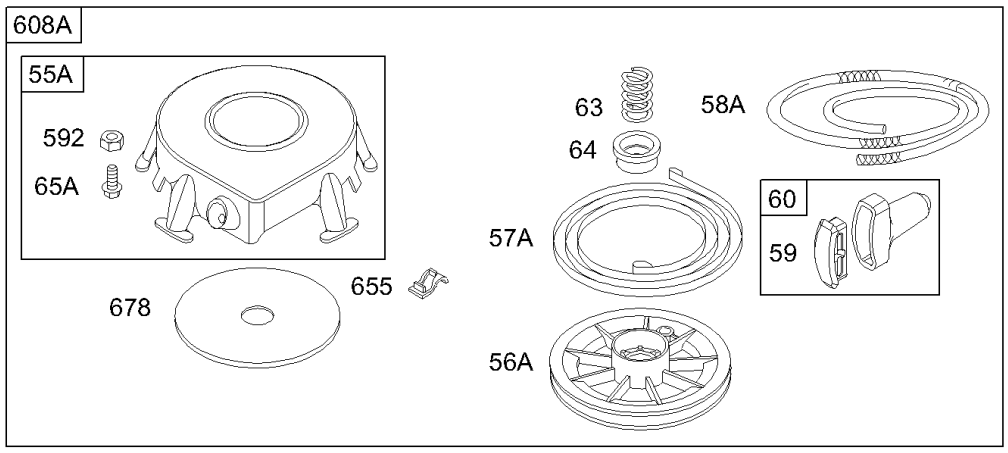

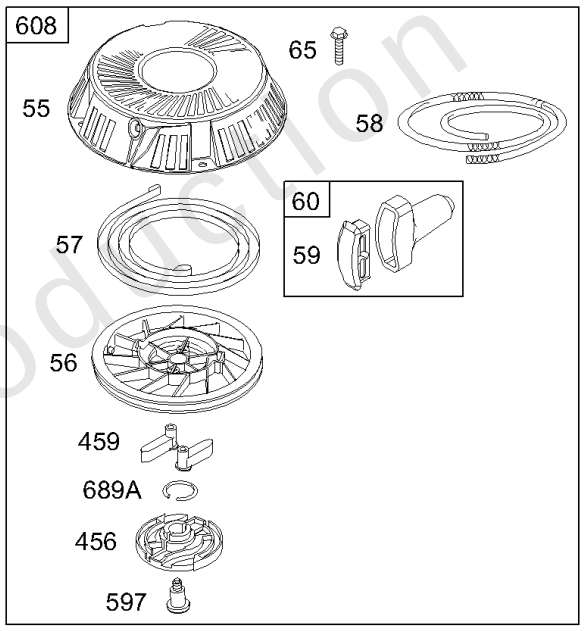

Not For Reproduction

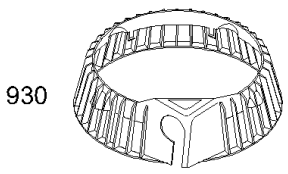

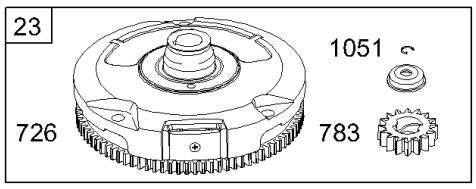

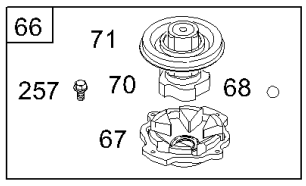

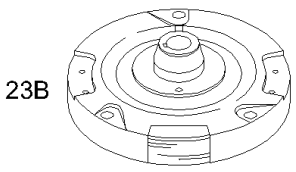

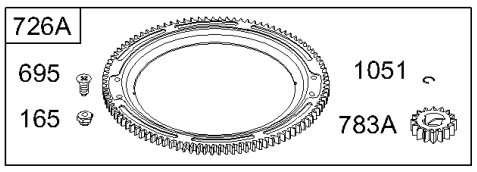

Copyright © Briggs and Stratton. All Rights reserved

Rewind Starter, Flywheel

REF NO	PART NO	QTY	DESCRIPTION
608A	390391		STARTER, Rewind -Used Before Code Date 99102500
655	691734		ANCHOR, Rewind Spring -Used Before Code Date 99102500
678	490817		SPACER -(Rewind) -Used Before Code Date 99102500
689A	691855		SPRING, Friction -Used After Code Date 99102400
695	693109		SCREW -(Ring Gear)
726	-----		Gear-Ring -(Steel)(See Reference 23 for Service)
726A	696537		GEAR, Ring -(Aluminum)(Services Plastic Ring Gear Only)
783	693713		GEAR, Pinion -(DC)(10-16 AMP)
783A	695708		GEAR, Pinion -(Aluminum And Plastic Ring Gears)
930	691904		GUARD, Rewind -Used Before Code Date 99102500
1051	691265		RING, Retaining

Not For Reproduction

Copyright © Briggs and Stratton. All Rights reserved