Parts Manual

Mfg. No: 21A907-0113-E1

Copyright © Briggs and Stratton. All Rights reserved

08-Jul-2019

Model Components

	Page
Air Cleaner, Blower Housing, Exhaust System	4
Alternator	6
Camshaft, Crankshaft, Lubrication, Piston, Rings, Connecting Rod	8
Carburetor, Kit - Carburetor Overhaul	12
Controls, Electric Starter, Flywheel, Rewind Starter	16
Cylinder Head, Gasket Set - Engine, Gasket Set - Valve, Intake Manifold	20
Cylinder, Engine Sump, Operator's Manual, Warning Label	24
Fuel Supply, Governor Spring, Ignition	26
Replacement Engine	30

Not For Reproduction

Copyright © Briggs and Stratton. All Rights reserved

Air Cleaner, Blower Housing, Exhaust System

Mfg. No: 21A907-0113-E1

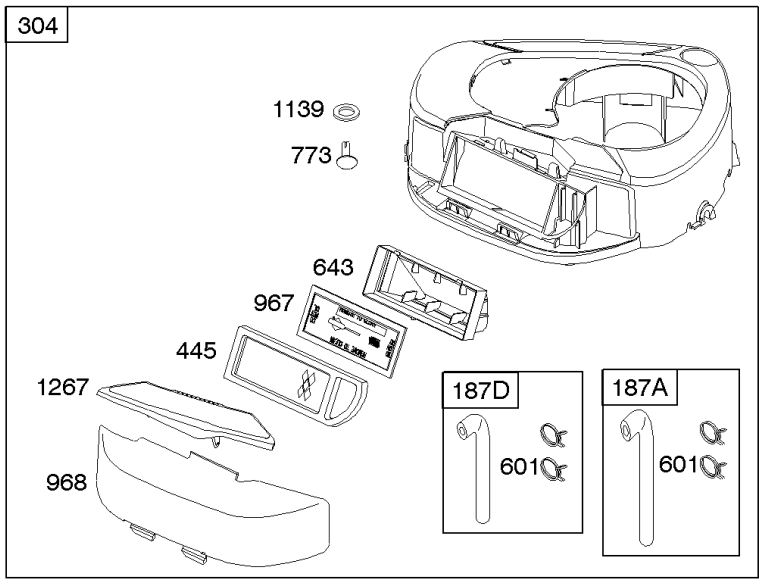

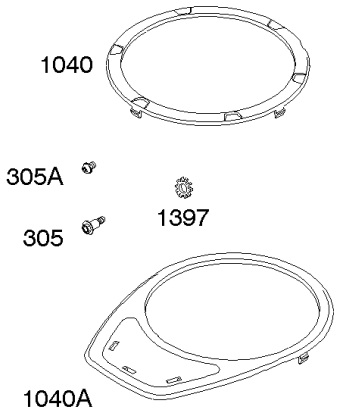

1036 EMISSIONS LABEL

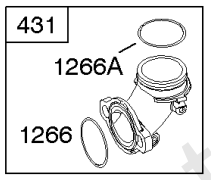

Not For Reproduction

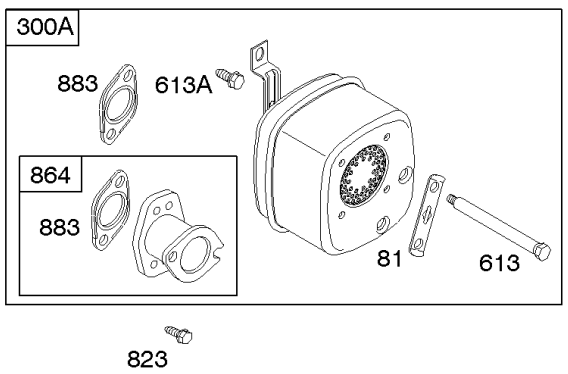

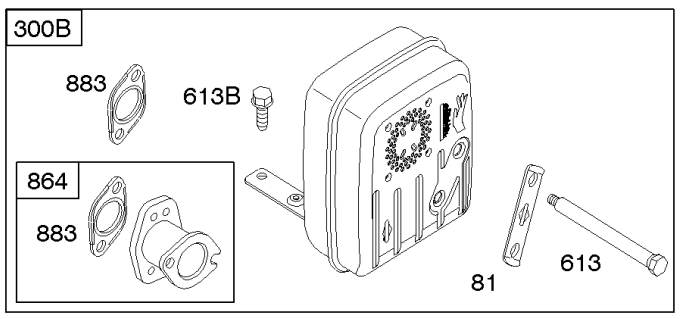

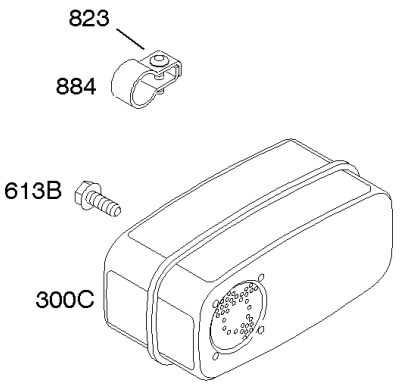

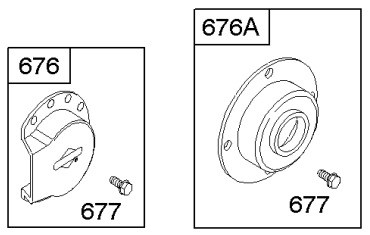

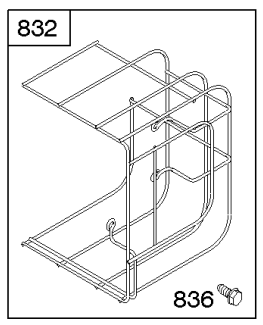

Copyright © Briggs and Stratton. All Rights reserved

Air Cleaner, Blower Housing, Exhaust System

REF NO	PART NO	QTY	DESCRIPTION
81	691178		LOCK, Muffler Screw
187A	791806		LINE, Fuel -(Formed)(21)(Cut to Required Length)
187D	791744		LINE, Fuel -(Formed)(14 Inches Long)(Cut To Required Length)
304	796414		HOUSING, Blower -(Black)
305	697102		SCREW -(Blower Housing)
305A	793376		SCREW -(Blower Housing)
431	697122		MANIFOLD, Intake
445	698413		FILTER, A/C Cartridge -(Non Washable)
601	791850		CLAMP, Hose -(Zinc Plate)(Spring Wire)
613	691416		SCREW -(Muffler)
613A	691678		SCREW -(Muffler)
613B	690297		SCREW -(Muffler)
643	697155		RETAINER, Air Filter
677	690661		SCREW -(Muffler Deflector)
773	796448		RETAINER
823	698941		SCREW -(Muffler Adapter)
836	690367		SCREW -(Muffler Guard)
864	796002		ADAPTER, Muffler -(2 1/4" Long)
864	794661		ADAPTER, Muffler -(1 3/4)
883	692236		GASKET, Exhaust
967	697292		FILTER, Pre Cleaner
968	697420		COVER, Air Cleaner -(Black)
968	697422		COVER, Air Cleaner -(Red)
1036	-----		Label-Emissions -(Available From A Briggs & Stratton Authorized Dealer)
1040	698368		PLATE, Trim
1139	796449		WASHER -(Fuel Pump Bracket)
1266	691917		SEAL, O-Ring -(Intake Elbow)
1266A	697123		SEAL, O-Ring -(Intake Elbow)
1267	697424		LATCH, Blower Housing -(Red)
1267	697419		LATCH, Blower Housing -(Black)
1397	791219		WASHER -(Blower Housing)

Not For Reproduction

Copyright © Briggs and Stratton. All Rights reserved

Mfg. No: 21A907-0113-E1

DC ONLY	DUAL CIRCUIT	5 - 9 AMP	10 - 16 AMP
474A 1059 877A	474B 1059 877	474C 1059 877B	474D 1059 877C
578	878	578	578
	526A 501C	526A 501A	526B 501D
		526B 501B	

NOTE: *All stators use a No. 1119mounting screw.*

NOTE: *The proper flywheel part number and/or the alternator magnet size will determine the alternator type or output. See repair instruction manual for additional information.*

Not For Reproduction

Copyright © Briggs and Stratton. All Rights reserved

Alternator

REF NO	PART NO	QTY	DESCRIPTION
5	796183		HEAD, Cylinder
10	697157		SCREW -(Breather Assembly)
474C	696457		ALTERNATOR -(5 and 9 Amp Regulated)
501A	794360		REGULATOR -(5 To 9 Amp Regulated)
526A	697088		SCREW -(Regulator) (5 To 9 Amp Regulated)
526B	697348		SCREW -(Regulator)
578	692306		WIRE ASSEMBLY
877	393456		WIRE/CONNECTOR, Alternator -(Dual Circuit)
877A	393814		WIRE/CONNECTOR, Alternator -(DC Only)
877B	393537		WIRE/CONNECTOR, Alternator -(5 and 9 Amp Regulated)
877C	399916		WIRE/CONNECTOR, Alternator -(10 and 16 Amp Regulated)
878	398661		HARNESS, Wiring
1059	698516		KIT, Screw/Washer
1119	691183		SCREW -(Alternator)

Not For Reproduction

Copyright © Briggs and Stratton. All Rights reserved

Mfg. No: 21A907-0113-E1

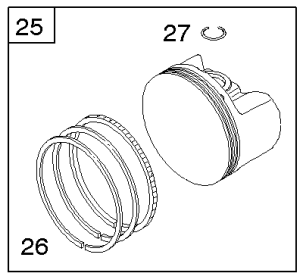

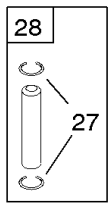

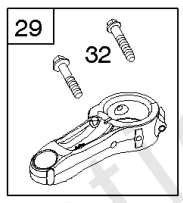

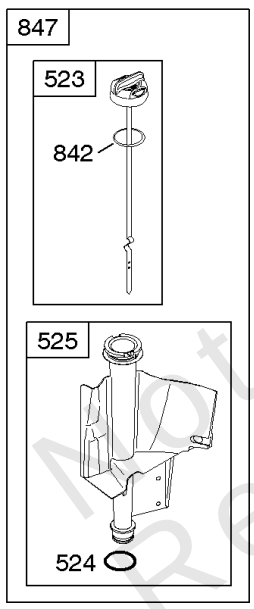

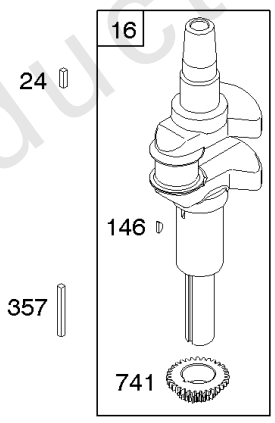

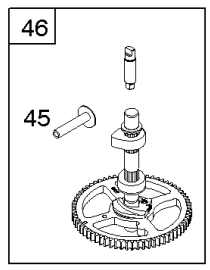

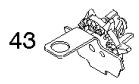

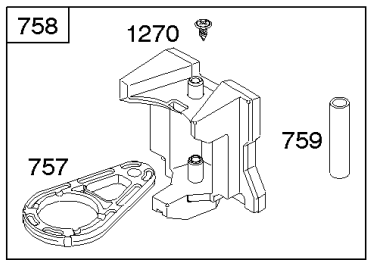

Not For Reproduction

Copyright © Briggs and Stratton. All Rights reserved

Camshaft, Crankshaft, Lubrication, Piston, Rings, Connecting Rod

REF NO	PART NO	QTY	DESCRIPTION
16	697390		CRANKSHAFT
24	222698S		KEY, Flywheel
25	792307		PISTON ASSEMBLY -(Standard)
25	792728		PISTON ASSEMBLY -(.020 Oversize)
26	792306		SET, Ring -(Standard)
26	792643		SET, Ring -(.020 Oversize)
27	698138		LOCK, Piston Pin -Used Before Code Date 04100400
27	698469		LOCK, Piston Pin -Used After Code Date 04100300
28	697099		PIN, Piston
29	697262		ROD, Connecting -(.020 Undersize) -Used Before Code Date 05040400
29	791633		ROD, Connecting -(Standard)
32	791118		SCREW -(Connecting Rod)
43	691968		SLINGER, Governor/Oil
45	690564		TAPPET, Valve
46	793880		CAMSHAFT
146	691639		KEY, Woodruff
523	699908		DIPSTICK
524	691032		SEAL, O-Ring
525	697184		TUBE, Dipstick
741	697128		GEAR, Timing
757	793242		LINK, Counterweight
758	-----		Counterweight -(Must Use Kit 795940, Includes Sump And Counterweight) -Used Before Code Date 05100300
758	697391		COUNTERWEIGHT -Used After Code Date 05100200
759	697392		PIN, Counterweight
842	691031		SEAL, O-Ring -(Dipstick Tube)
847	790442		DIPSTICK/TUBE ASSEMBLY
1270	697156		PLUG, AVS Counterweight

Not For Reproduction

Copyright © Briggs and Stratton. All Rights reserved

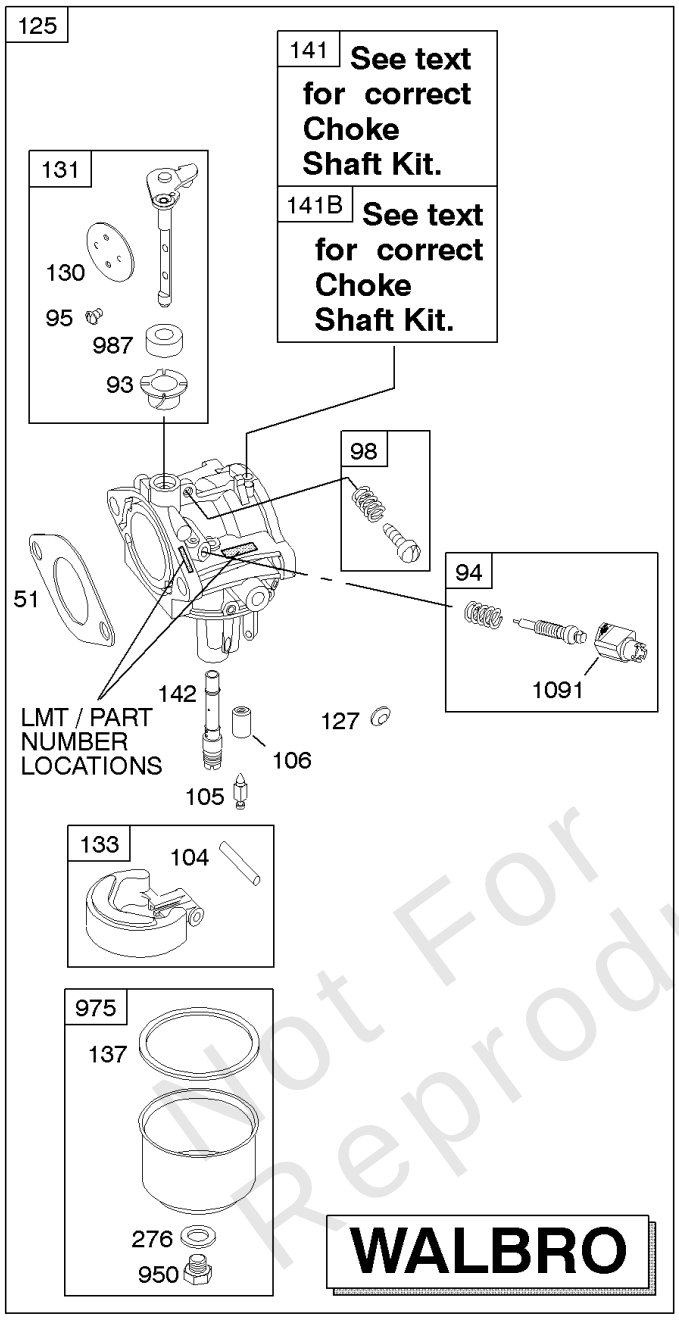

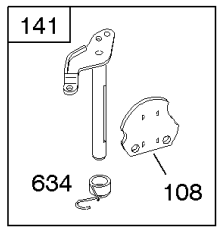

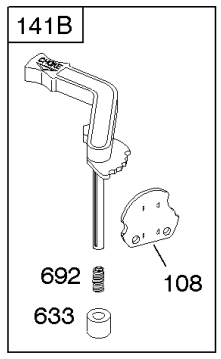

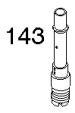

Not For Reproduction

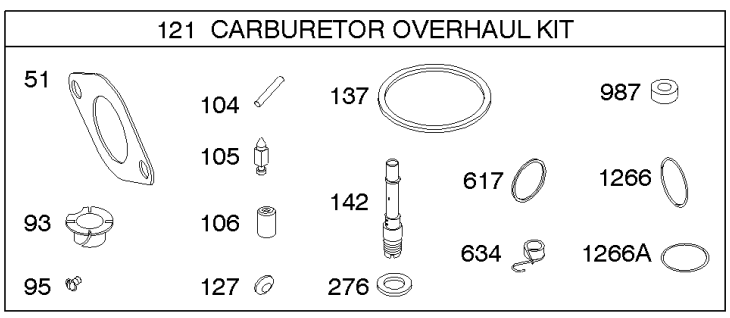

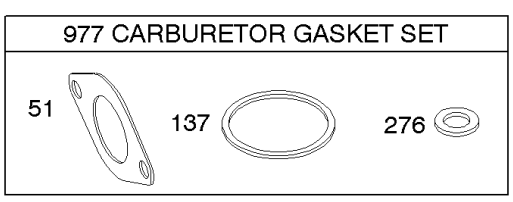

Copyright © Briggs and Stratton. All Rights reserved

Carburetor, Kit - Carburetor Overhaul

REF NO	PART NO	QTY	DESCRIPTION
51	692137		GASKET, Intake
93	690602		BUSHING, Throttle Shaft
94	794176		KIT, Idle Mixture -(Walbro)
95	691636		SCREW -(Throttle Valve) (Walbro)
98	495800		KIT, Idle Speed -(Walbro)
104	690525		PIN, Float Hinge -(Walbro)
105	231855S		VALVE, Float Needle -(Walbro)
106	690577		SEAT, Inlet -(Walbro)(Gravity Feed)
106	691780		SEAT, Inlet -(Walbro)(Pump Feed)
108	691227		VALVE, Choke -(Walbro)
121	790031		KIT, Carburetor Overhaul -(Walbro)
127	694524		PLUG, Welch
130	790024		VALVE, Throttle -(Walbro)
131	790901		KIT, Throttle Shaft -(Walbro)
133	494381		FLOAT, Carburetor -(Walbro)
137	281165S		GASKET, Float Bowl -(Walbro)
141	790902		KIT, Choke Shaft -(Walbro)
142	790025		NOZZLE, Carburetor -(Standard) (Walbro)
143	790028		NOZZLE, Carburetor -(High Altitude) (Walbro)
276	692255		WASHER, Sealing
617	692138		SEAL, O-Ring -(Intake Manifold)
634	690802		SPRING/SEAL ASSEMBLY -(Walbro)
692	691301		SPRING, Detent
950	691657		SCREW -(Float Bowl) (Bottom Of Bowl)
975	495933		BOWL, Float -(Walbro)
977	690192		SET, Carburetor Gasket
987	691326		SEAL, Choke/Throttle Shaft
1091	691333		CAP, Limiter
1266	691917		SEAL, O-Ring -(Intake Elbow)
1266A	697123		SEAL, O-Ring -(Intake Elbow)

Not For Reproduction

Copyright © Briggs and Stratton. All Rights reserved

Carburetor, Kit - Carburetor Overhaul

Mfg. No: 21A907-0113-E1

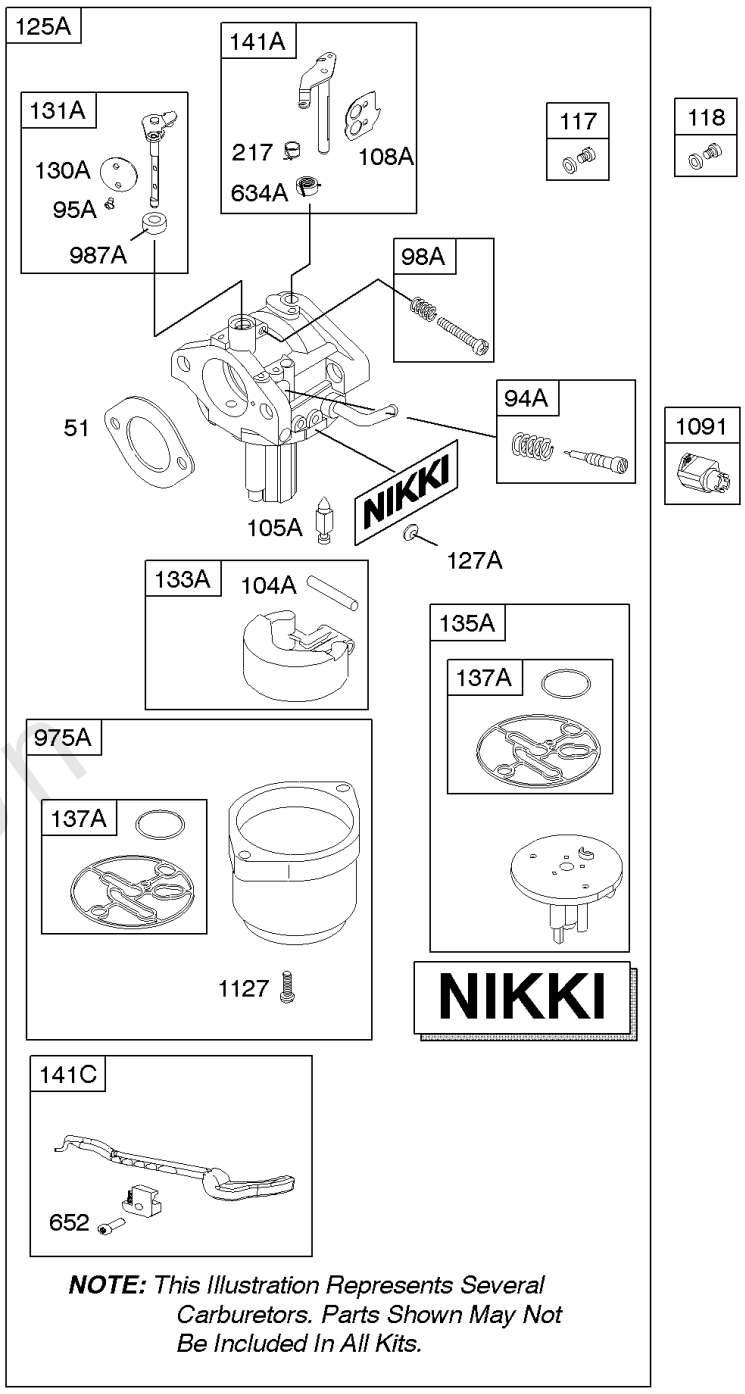

NOTE: *This Illustration Represents Several Carburetors. Parts Shown May Not Be Included In All Kits.*

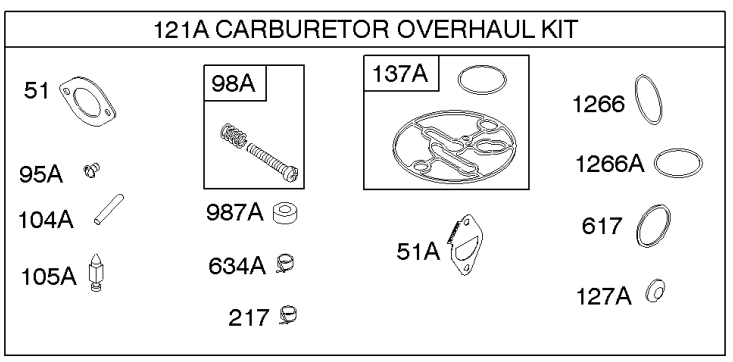

Not For Reproduction

Carburetor, Kit - Carburetor Overhaul

REF NO	PART NO	QTY	DESCRIPTION
51	692137		GASKET, Intake
51A	796081		GASKET, Intake
94A	793610		KIT, Idle Mixture -(Nikki)
95A	690718		SCREW -(Throttle Valve) (Nikki)
98A	695408		KIT, Idle Speed -(Nikki)
104A	694918		PIN, Float Hinge -(Nikki)
105A	696136		VALVE, Float Needle -(Nikki)
108A	698773		VALVE, Choke -(Nikki)
117	699897		JET, Main -(Standard) -Used Before Code Date 07122600
117	794352		JET, Main -(Standard) -Used After Code Date 07122500 -Used Before Code Date 08110600
117	794352		JET, Main -(Standard) -Used After Code Date 08110500
118	699898		JET, Main -(High Altitude) -Used Before Code Date 07122600
118	791405		JET, Main -(High Altitude) -Used After Code Date 07122500 -Used Before Code Date 08110600
118	791405		JET, Main -(High Altitude) -Used After Code Date 08110500
121A	698787		KIT, Carburetor Overhaul -(Nikki)
125A	794308		CARBURETOR -(Nikki)(Gravity Feed) -Used After Code Date 07122500 -Used Before Code Date 08110600
125A	791266		CARBURETOR -(Nikki)(Pump Feed) -Used Before Code Date 07122600
125A	796077		CARBURETOR -(Nikki)(Gravity Feed) -Used After Code Date 08110500
127A	690727		PLUG, Welch -(Nikki)
130A	698774		VALVE, Throttle -(Nikki)
131A	698776		KIT, Throttle Shaft -(Nikki)
133A	694914		FLOAT, Carburetor -(Nikki)
135A	792022		TUBE, Fuel Transfer -(Nikki)(Pump Feed) -Used Before Code Date 07122600
135A	698780		TUBE, Fuel Transfer -(Nikki)(Gravity Feed) -Used After Code Date 07122500
137A	698781		GASKET, Float Bowl -(Nikki)

Not For Reproduction

Copyright © Briggs and Stratton. All Rights reserved

Carburetor, Kit - Carburetor Overhaul

Mfg. No: 21A907-0113-E1

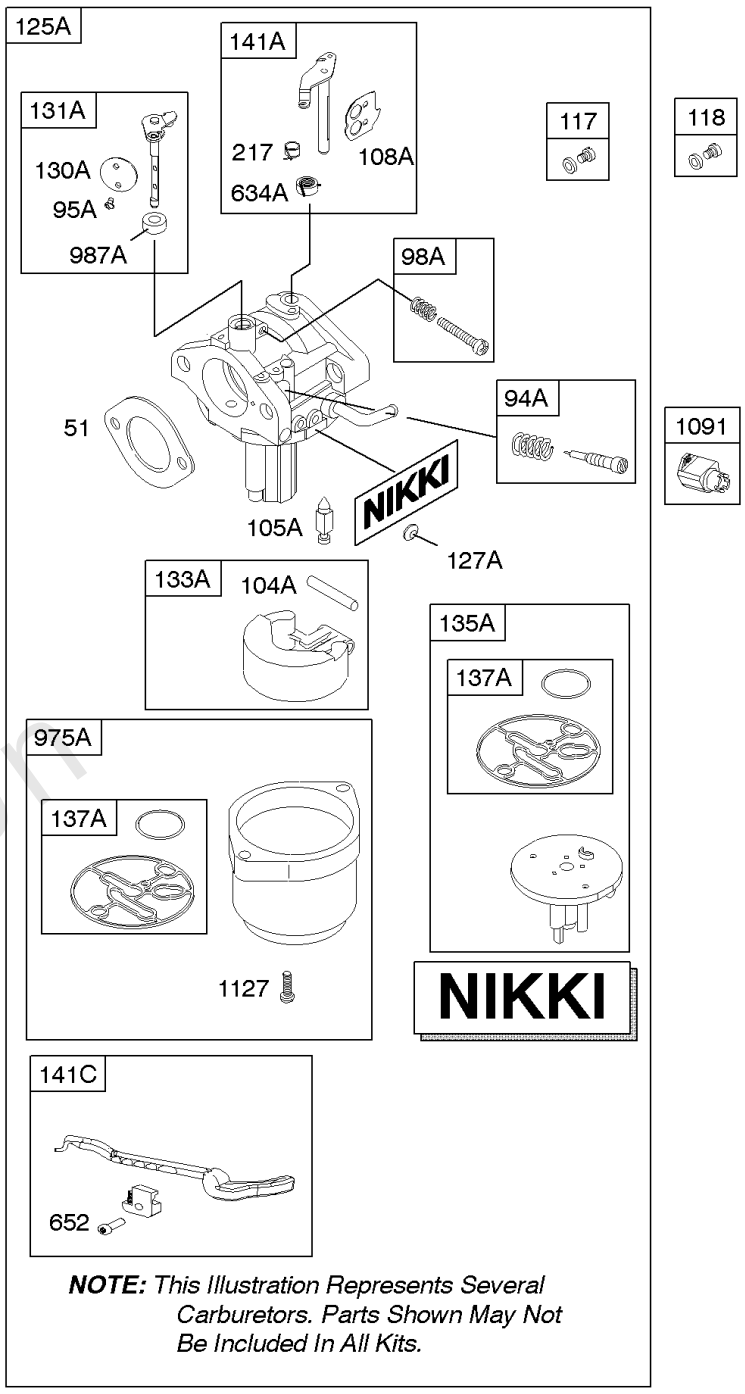

NOTE: *This Illustration Represents Several Carburetors. Parts Shown May Not Be Included In All Kits.*

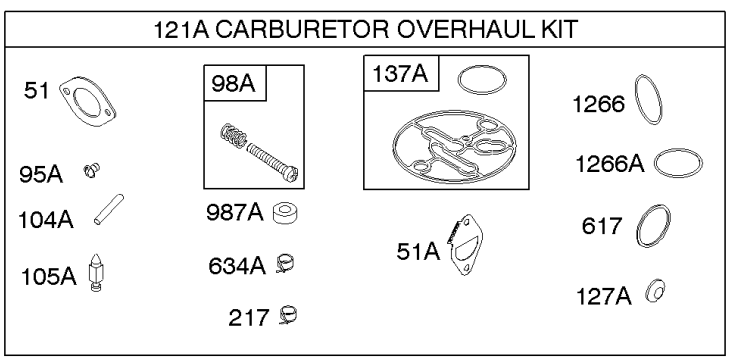

Not For Reproduction

Carburetor, Kit - Carburetor Overhaul

REF NO	PART NO	QTY	DESCRIPTION
141A	698778		KIT, Choke Shaft -(Nikki)
217	695409		SPRING, Choke Return
617	692138		SEAL, O-Ring -(Intake Manifold)
634A	698779		SPRING/SEAL ASSEMBLY -(Nikki)
652	793380		SCREW -(Support Bracket)
975A	698783		BOWL, Float -(Nikki)
987A	698777		SEAL, Choke/Throttle Shaft -(Nikki)
1091	691333		CAP, Limiter
1127	695407		SCREW -(Float Bowl) (Float Bowl to Carburetor Body)
1266	691917		SEAL, O-Ring -(Intake Elbow)
1266A	697123		SEAL, O-Ring -(Intake Elbow)

Not For Reproduction

Copyright © Briggs and Stratton. All Rights reserved

Controls, Electric Starter, Flywheel, Rewind Starter

Mfg. No: 21A907-0113-E1

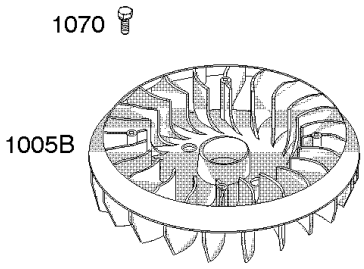

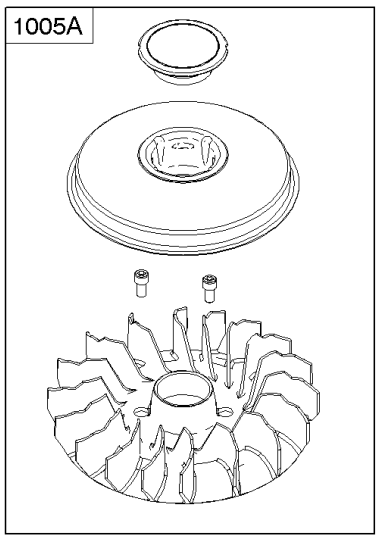

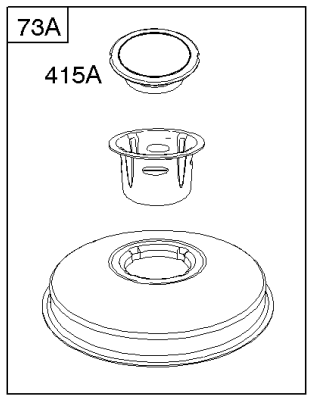

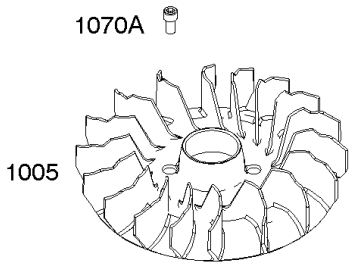

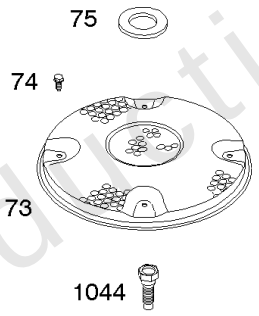

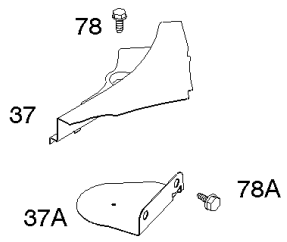

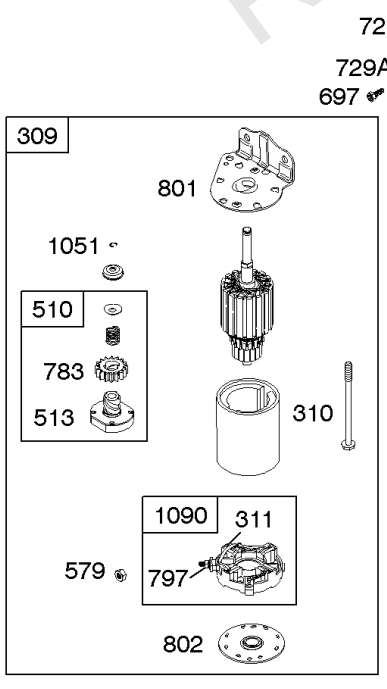

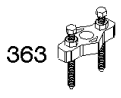

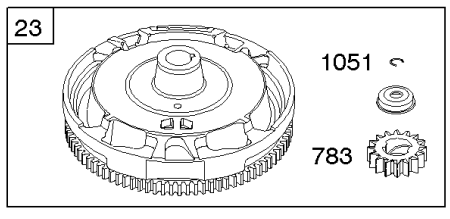

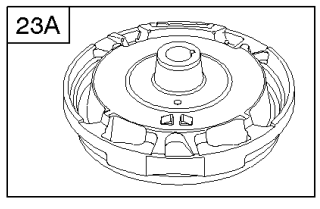

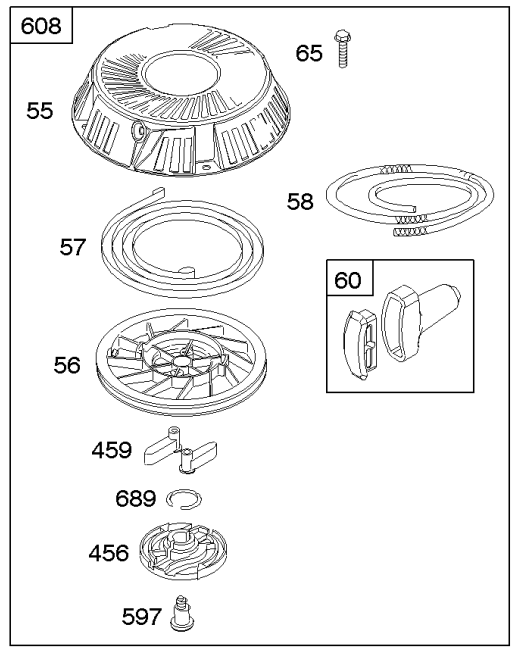

Not For Reproduction

Controls, Electric Starter, Flywheel, Rewind Starter

REF NO	PART NO	QTY	DESCRIPTION
23	698282		FLYWHEEL
37	697352		GUARD, Flywheel
55	695130		HOUSING, Rewind Starter
56	695129		PULLEY, Starter
57	695131		SPRING, Rewind Starter
58	695132		ROPE, Starter
60	493926		GRIP, Starter Rope
65	697725		SCREW -(Rewind Starter) -Used Before Code Date 07040900
65	690759		SCREW -(Rewind Starter) -Used After Code Date 07040800
73	-----		Screen-Rotating -(Service With Flywheel Fan 794440) -Used Before Code Date 07040900
73A	796308		SCREEN/CUP ASSEMBLY -Used After Code Date 07040800
74	697897		SCREW -(Rotating Screen) -Used Before Code Date 07040900
75	690582		WASHER -(Flywheel)
78	691003		SCREW -(Flywheel Guard)
78A	690364		SCREW -(Flywheel Guard) (Electric Start)
309	693551		MOTOR, Starter
310	690323		BOLT -(Starter Motor)
311	497608		SET, Brush
363	19203		PULLER, Flywheel
415A	794129		PLUG -(Cover/Retainer)
456	695128		PLATE, Pawl Friction
459	281505S		PAWL, Ratchet
510	693699		DRIVE, Starter
513	692024		CLUTCH, Drive
579	691029		NUT -(Starter Cable)
597	691696		SCREW -(Pawl Friction Plate)
608	695058		STARTER, Rewind
689	691855		SPRING, Friction
697	690372		SCREW -(Drive Cap)
729A	691224		CLIP, Wire -(Starter Motor)
729B	694123		CLIP, Wire -(Wire Retainer)
783	693713		GEAR, Pinion
797	693167		NUT -(Brush Retainer)
801	691283		CAP, Drive
802	691286		CAP, End
1005	796082		FAN, Flywheel -Used After Code Date 07040800

Not For Reproduction

Copyright © Briggs and Stratton. All Rights reserved

Controls, Electric Starter, Flywheel, Rewind Starter

Mfg. No: 21A907-0113-E1

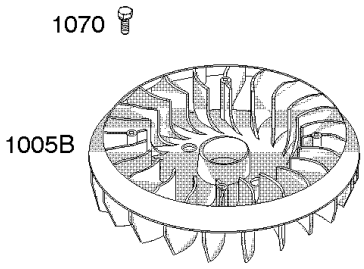

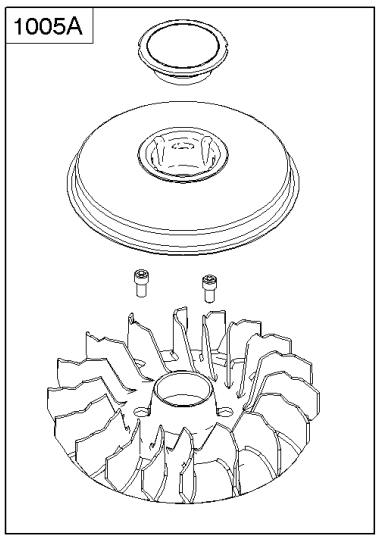

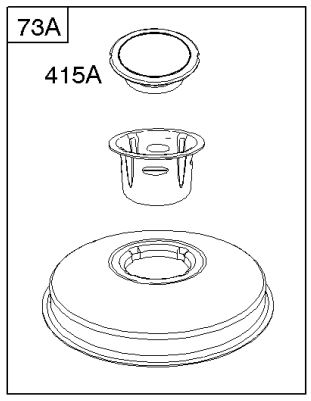

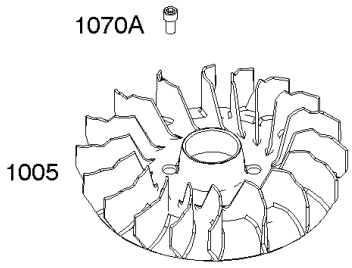

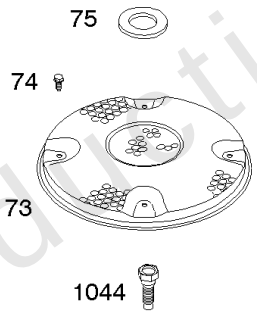

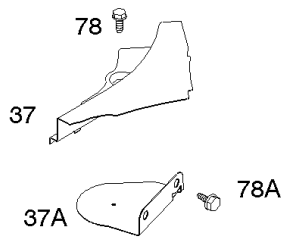

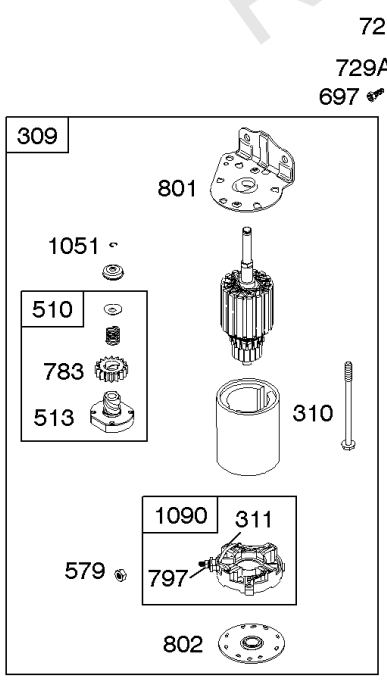

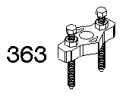

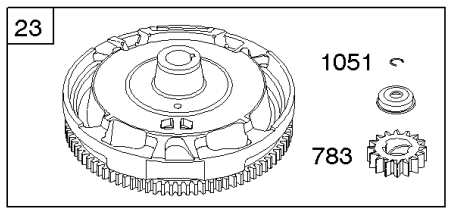

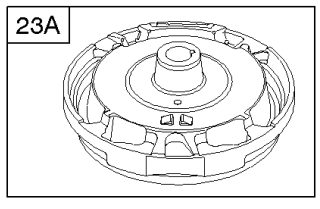

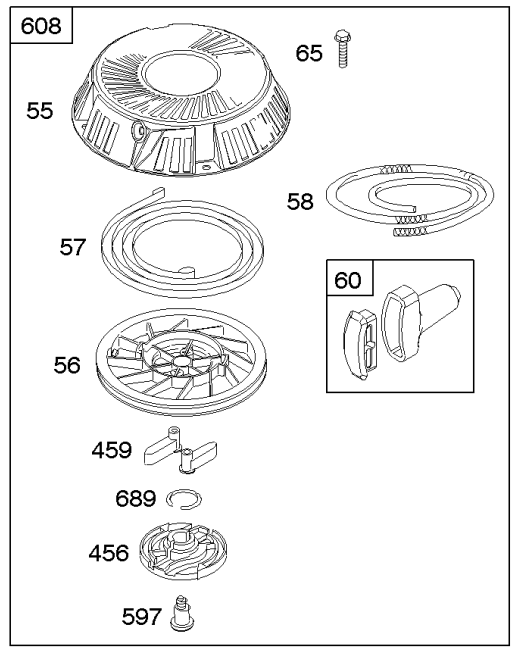

Not For Reproduction

Controls, Electric Starter, Flywheel, Rewind Starter

REF NO	PART NO	QTY	DESCRIPTION
1005A	796200		FAN, Flywheel -Used Before Code Date 07040900
1005B	-----		Fan-Flywheel -(No Longer Available)(See Reference 1005A for Service Flywheel Fan)
1044	698139		SCREW -(Flywheel)
1051	691265		RING, Retaining
1070	690372		SCREW -(Flywheel Fan) -Used Before Code Date 07040900
1070A	690363		SCREW -(Flywheel Fan) -Used After Code Date 07040800 -Used Before Code Date 08061900
1090	691293		RETAINER, Brush

Not For Reproduction

Copyright © Briggs and Stratton. All Rights reserved

Cylinder Head, Gasket Set - Engine, Gasket Set - Valve, Intake Manifold

Mfg. No: 21A907-0113-E1

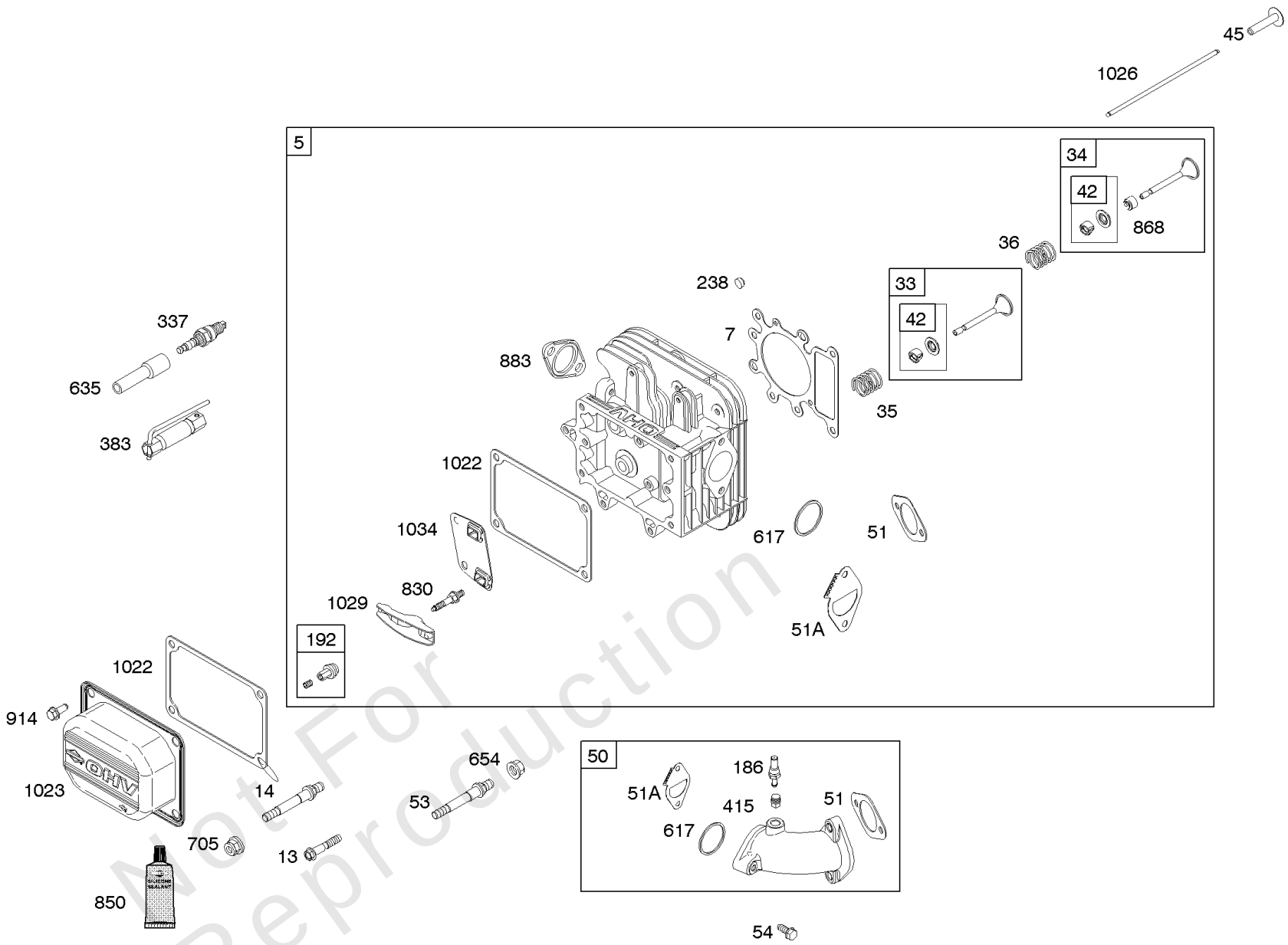

Not For Reproduction

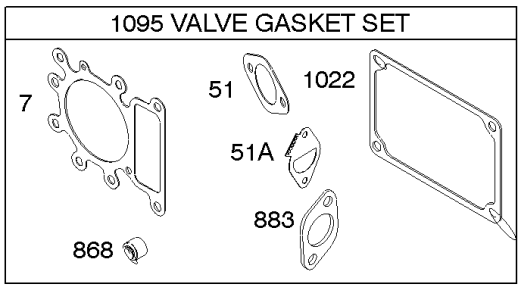

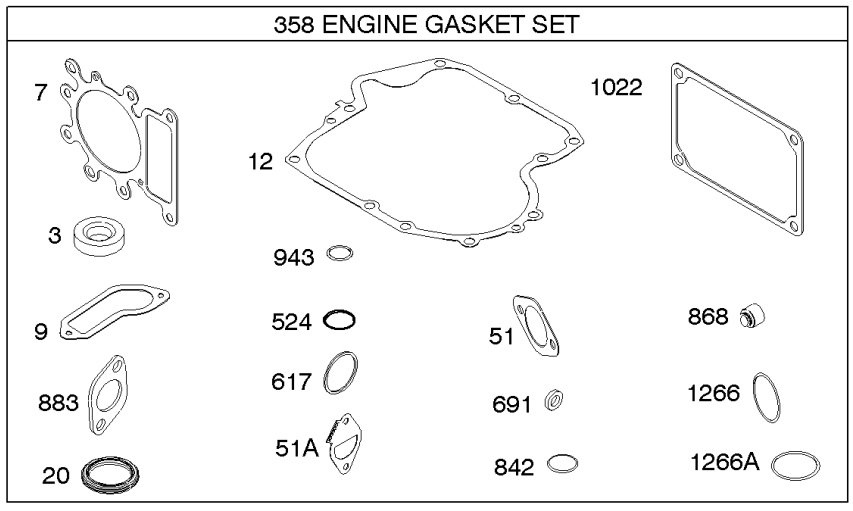

Cylinder Head, Gasket Set - Engine, Gasket Set - Valve, Intake Manifold

REF NO	PART NO	QTY	DESCRIPTION
3	391086S		SEAL, Oil -(Magneto Side)
5	796183		HEAD, Cylinder
7	273280S		GASKET, Cylinder Head
9	697109		GASKET, Breather -(After Date Code Use Liquid Sealant Reference 850) -Used Before Code Date 07071900
12	697110		GASKET, Crankcase -(.015" Thick)(Standard)
13	690360		SCREW -(Cylinder Head)
14	790560		STUD -(Cylinder Head)
20	795387		SEAL, Oil -(PTO Side)
33	791934		VALVE, Exhaust
34	791935		VALVE, Intake
35	691279		SPRING, Valve -(Intake)
36	691279		SPRING, Valve -(Exhaust)
42	499586		KEEPER, Valve
45	690564		TAPPET, Valve
50	796188		MANIFOLD, Intake
51	692137		GASKET, Intake
51A	796081		GASKET, Intake
53	690227		STUD -(Carburetor)
54	691148		SCREW -(Intake Manifold)
186	794873		CONNECTOR, Hose
192	691986		ADJUSTER, Rocker Arm
238	691843		CAP, Valve
337	691043		PLUG, Spark
358	697151		GASKET SET, Engine
383	89838S		WRENCH, Spark Plug
415	794903		PLUG -(Sump)
524	691032		SEAL, O-Ring
617	692138		SEAL, O-Ring -(Intake Manifold)
635	691909		BOOT, Spark Plug
654	690958		NUT -(Carburetor)
691	692407		SEAL, Governor Shaft
705	790561		NUT -(Fuel Tank)
830	691095		STUD, Rocker Arm
842	691031		SEAL, O-Ring -(Dipstick Tube)
850	100100		SEALANT, Liquid -(Rocker Cover Gasket and Breather Gasket) -Used After Code Date 07071800
868	794086		SEAL, Valve
883	692236		GASKET, Exhaust
914	691108		SCREW -(Rocker Cover)

Not For Reproduction

Copyright © Briggs and Stratton. All Rights reserved

Cylinder Head, Gasket Set - Engine, Gasket Set - Valve, Intake Manifold

Mfg. No: 21A907-0113-E1

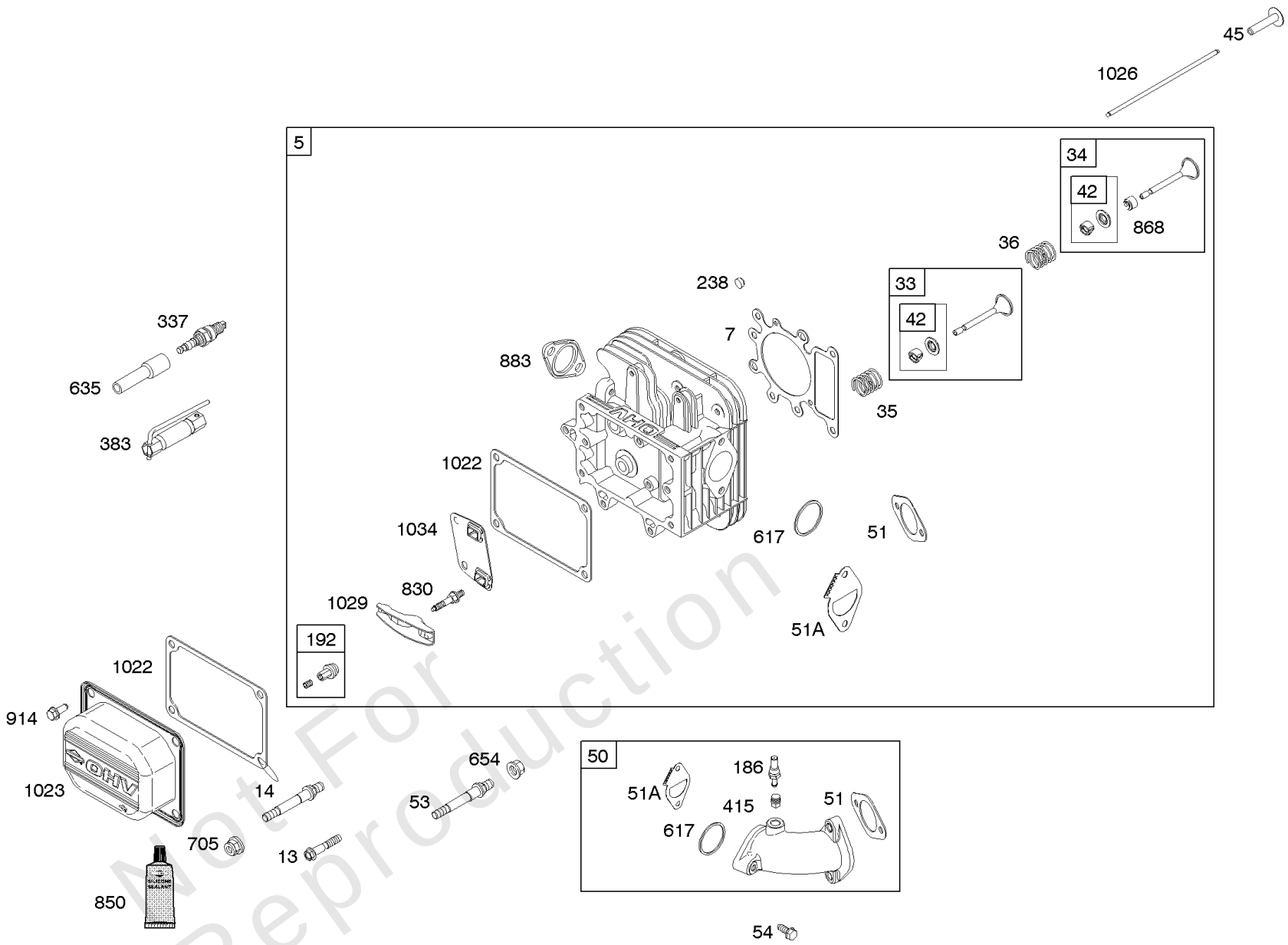

Not For Reproduction

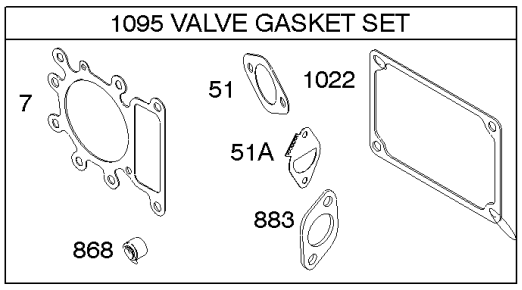

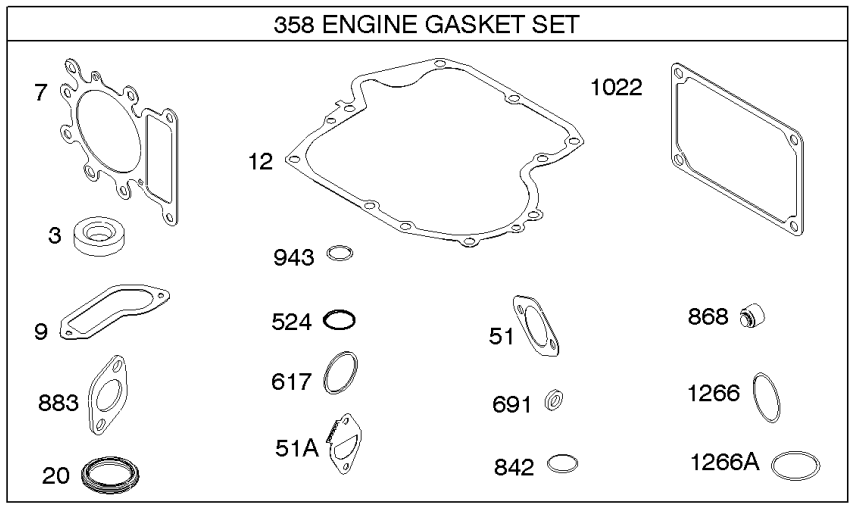

Copyright © Briggs and Stratton. All Rights reserved

Cylinder Head, Gasket Set - Engine, Gasket Set - Valve, Intake Manifold

REF NO	PART NO	QTY	DESCRIPTION
943	690589		SEAL, O-Ring -(Oil Pump Cover)
1022	272475S		GASKET, Rocker Cover -(After Date Code Use Liquid Sealant Reference 850) -Used Before Code Date 07091000
1023	794659		COVER, Rocker
1026	697394		ROD, Push -(Intake)
1026	794573		ROD, Push -(Exhaust)
1029	691751		ARM, Rocker
1034	690822		GUIDE, Push Rod
1095	691581		GASKET SET, Valve
1266	691917		SEAL, O-Ring -(Intake Elbow)
1266A	697123		SEAL, O-Ring -(Intake Elbow)

Not For Reproduction

Copyright © Briggs and Stratton. All Rights reserved

Cylinder, Engine Sump, Operator's Manual, Warning Label

Mfg. No: 21A907-0113-E1

1058 OPERATOR'S MANUAL

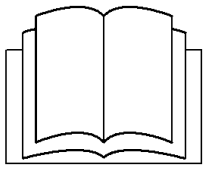

1319 WARNING LABEL

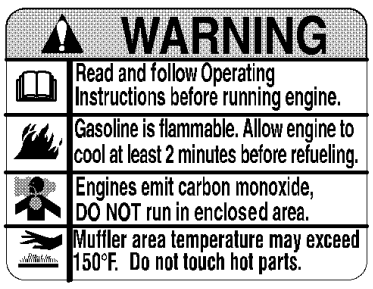

***REQUIRED** when replacing parts with warning labels affixed.*

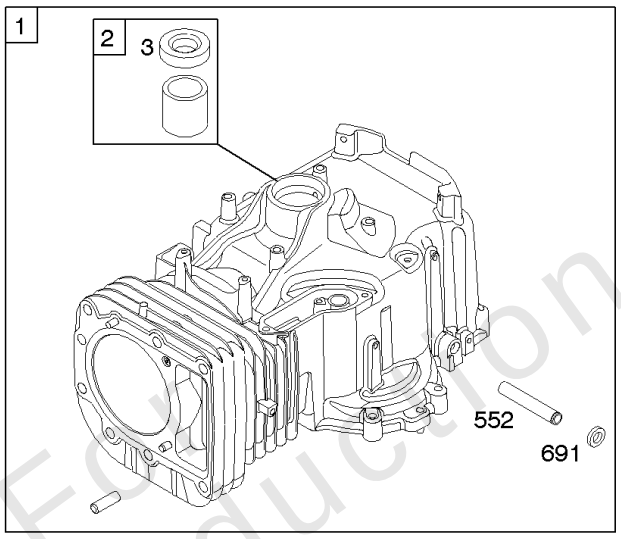

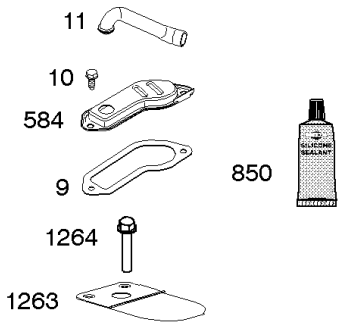

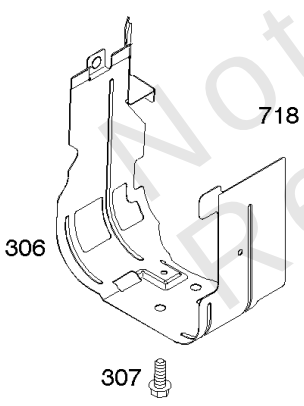

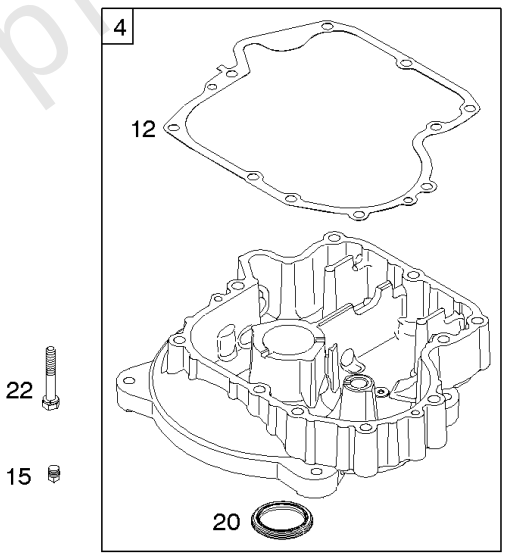

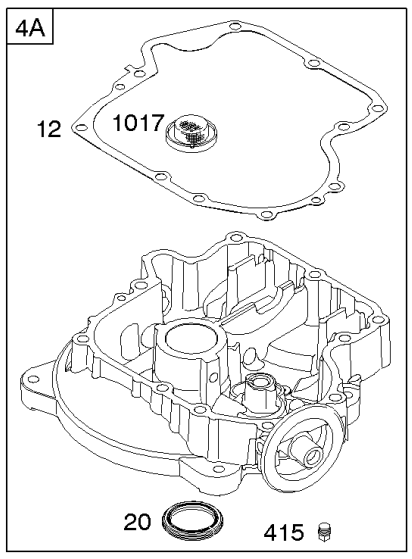

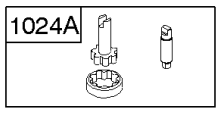

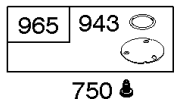

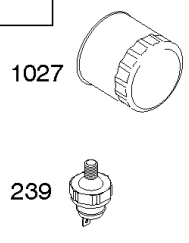

Not for Reproduction

Cylinder, Engine Sump, Operator's Manual, Warning Label

REF NO	PART NO	QTY	DESCRIPTION
1	697377		CYLINDER ASSEMBLY
2	399265		KIT, Bushing/Seal -(Magneto Side)
3	391086S		SEAL, Oil -(Magneto Side)
4	-----		Sump-Engine -(Must Use Kit 795940, Includes Sump And Counterweight) -Used Before Code Date 05100300
4	697106		SUMP, Engine -Used After Code Date 05100200
9	697109		GASKET, Breather -(After Date Code Use Liquid Sealant Reference 850) -Used Before Code Date 07071900
10	697157		SCREW -(Breather Assembly)
11	794683		TUBE, Breather
12	697110		GASKET, Crankcase -(.015" Thick)(Standard)
15	690946		PLUG, Oil Drain -(3/8" Standard)
20	795387		SEAL, Oil -(PTO Side)
22	692125		SCREW -(Crankcase Cover/Sump)
306	697359		SHIELD, Cylinder
307	691003		SCREW -(Cylinder Shield)
415	794903		PLUG -(Sump)
552	697144		BUSHING, Governor Crank
584	794682		COVER, Breather Passage -(Use with Liquid Sealant Reference 850)
691	692407		SEAL, Governor Shaft
718	690959		PIN, Locating
750	790832		SCREW -(Oil Pump Cover)
850	100100		SEALANT, Liquid -(Rocker Cover Gasket and Breather Gasket) -Used After Code Date 07071800
943	690589		SEAL, O-Ring -(Oil Pump Cover)
965	499613		COVER, Oil Pump
1017	796981		SCREEN, Oil Pump
1024A	794644		SHAFT, Pump
1027	492932S		FILTER, Oil
1058	276344		MANUAL, Operator's
1263	697124		REED, Breather
1264	697104		SCREW -(Breather Reed)
1319	794467		LABEL, Warning

Not For Reproduction

Copyright © Briggs and Stratton. All Rights reserved

Fuel Supply, Governor Spring, Ignition

Mfg. No: 21A907-0113-E1

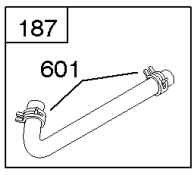

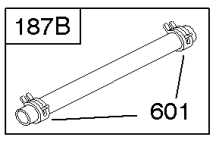

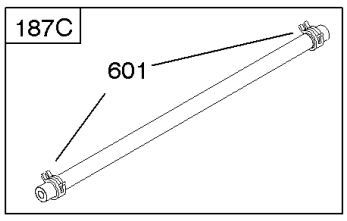

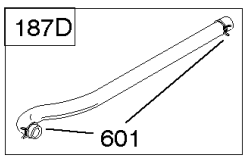

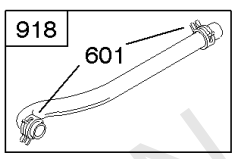

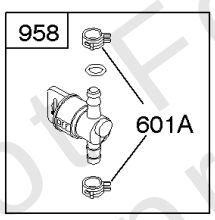

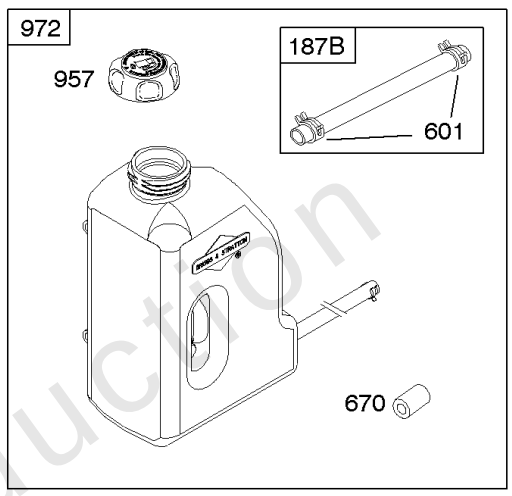

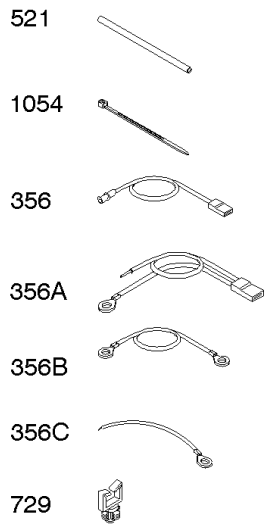

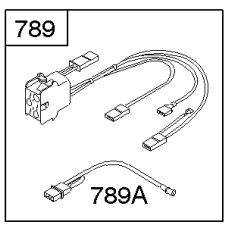

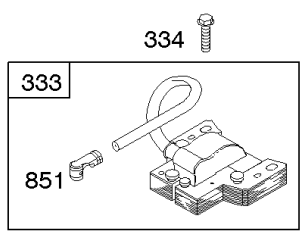

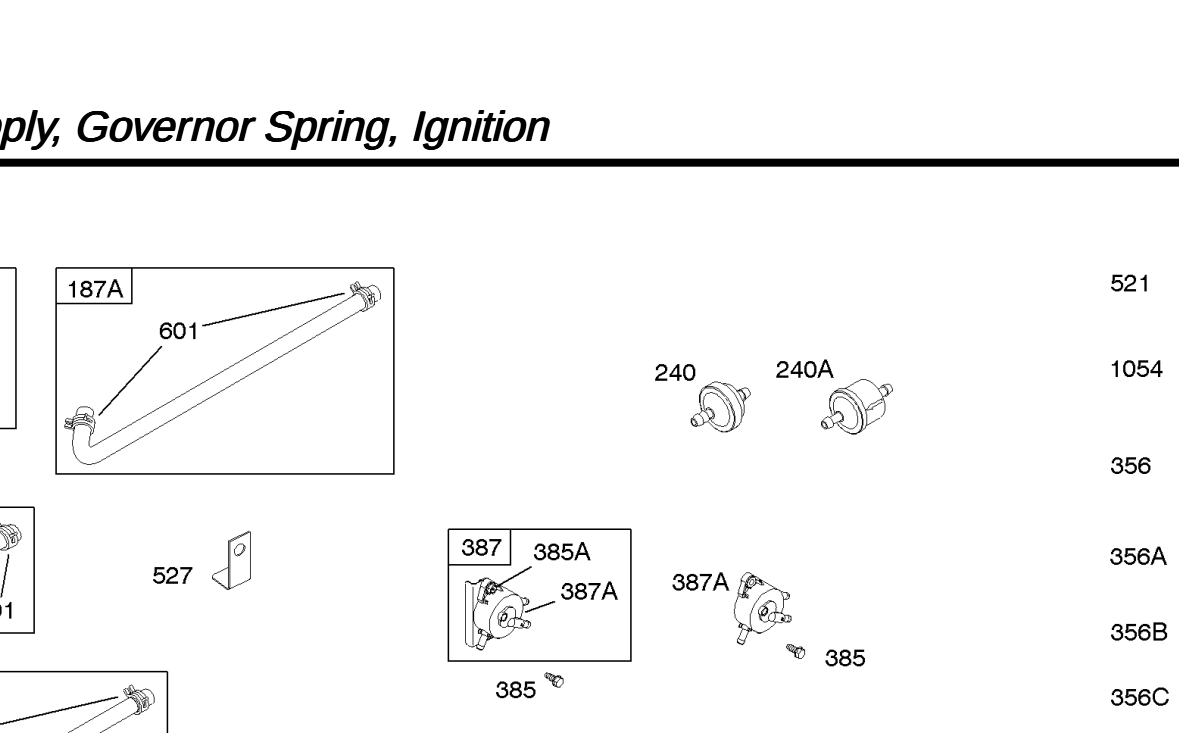

Not For Reproduction

Copyright © Briggs and Stratton. All Rights reserved

Fuel Supply, Governor Spring, Ignition

REF NO	PART NO	QTY	DESCRIPTION
187	791805		LINE, Fuel -(Formed)(10-1/4" Long)(Cut to Required Length)
187A	791806		LINE, Fuel -(Formed)(21)(Cut to Required Length)
187B	791766		LINE, Fuel -(15" Long)(Cut to Required Length)
187C	791745		LINE, Fuel -(23 Inches)(Cut To Required Length)
187D	791744		LINE, Fuel -(Formed)(14 Inches Long)(Cut To Required Length)
188	691693		SCREW -(Control Bracket)
202	691841		LINK, Mechanical Governor
209	792602		SPRING, Governor -(Red)
216	691840		LINK, Choke
222	694042		BRACKET, Control
227	691374		LEVER, Governor Control
232	691842		SPRING, Governor Link
240	394358S		FILTER, Fuel -(White, 75 Microns)
265	691024		CLAMP, Casing
267	794904		SCREW -(Casing Clamp)
268	691025		CASING, Control Wire -(Cut To Required Length)
269	691026		WIRE, Control -(Cut To Required Length)
270	691027		NUT -(Control Wire Casing)
271	691028		LEVER, Control
333	795315		ARMATURE, Magneto
334	691061		SCREW -(Magneto Armature)
356	697397		WIRE, Stop
356A	398808		WIRE, Stop -(Cut To Required Length)
356C	399222		WIRE, Stop
356B	697089		WIRE, Stop
359	691077		WASHER -(Ground Terminal)
373	691612		NUT -(Ground Terminal)
385	694476		SCREW -(Fuel Pump)
385A	690297		SCREW -(Fuel Pump)
387	697090		PUMP, Fuel -(Includes Mounting Bracket) -Used Before Code Date 08073000
387A	808656		PUMP, Fuel
404	691691		WASHER -(Governor Crank)
505	691251		NUT -(Governor Control Lever)
507	691972		INSULATOR
520	691084		TERMINAL, Ground
527	792167		CLAMP, Hose

Not For Reproduction

Copyright © Briggs and Stratton. All Rights reserved

Fuel Supply, Governor Spring, Ignition

Mfg. No: 21A907-0113-E1

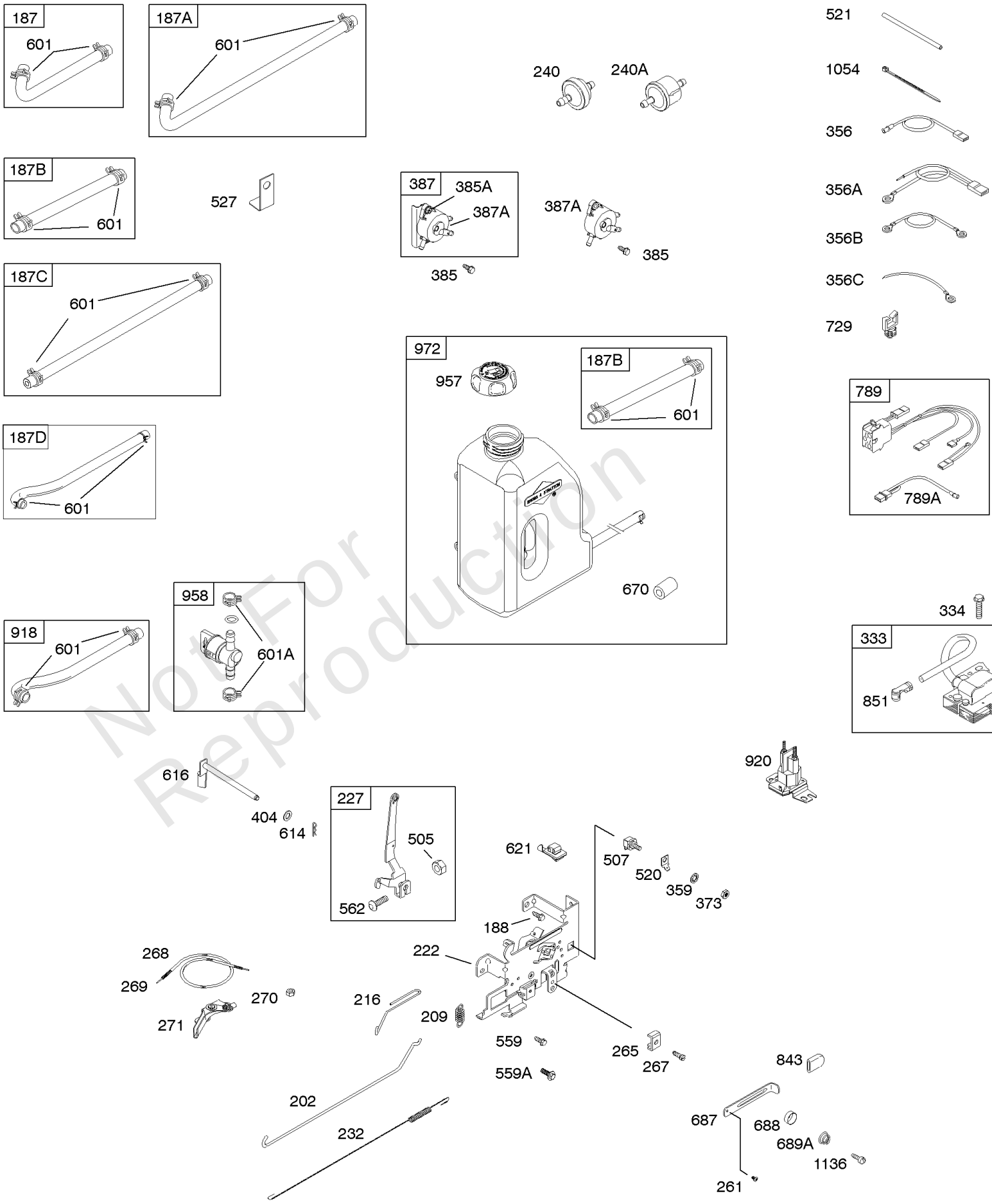

Not For Reproduction

Copyright © Briggs and Stratton. All Rights reserved

Fuel Supply, Governor Spring, Ignition

REF NO	PART NO	QTY	DESCRIPTION
562	691119		BOLT -(Governor Control Lever)
601	791850		CLAMP, Hose -(Zinc Plate)(Spring Wire)
601A	691038		CLAMP, Hose
614	691620		PIN, Cotter
616	692012		CRANK, Governor
670	796175		SPACER, Fuel Tank
729	691335		CLIP, Wire -(Wire Retainer)
789	698329		HARNESS, Wiring
789A	790544		WIRE/CONNECTOR, Alternator
851	692424		TERMINAL, Spark Plug
918	791851		HOSE, Vacuum -(Molded)
957	792647		CAP, Fuel Tank -(Plastic)
972	792168		TANK, Fuel -(Plastic)
1054	280275		TIE, Cable

Not For Reproduction

Copyright © Briggs and Stratton. All Rights reserved

Replacement Engine

REF NO	PART NO	QTY	DESCRIPTION
	2199073026	1	Replacement Engine
	592055	1	Replacement Short Block
	-----		Top No-Load Speed: 3200 -Trim: ALL
	-----		Service Note: Transfer Flywheel and Alternator Assembly from original to replacement engine.
	-----		Service Note: If the original engine is equipped with a Six Pin Wiring Harness transfer to the replacement engine.
	-----		Service Note: Transfer Muffler and/or Spark Arrester Assembly from the original engine if suitable for additional service or add new parts as required
	-----		Short Block Note: Engines Built Prior to 07/12/2012 should use short block 697740. Engines built on or after 07/12/2012 should use short block 592055.

Not For Reproduction

Copyright © Briggs and Stratton. All Rights reserved

Copyright © Briggs and Stratton. All Rights reserved