FORM MS5497 REV R 12/19/2014
REPLACES FORM MS5497 REV P 10/30/2012
FILE IN SECT. 2 OF SERVICE MANUAL

215800

Illustrated Parts List

Model Series

215800

TYPE NUMBERS
0001 through 4529.

TABLE OF CONTENTS

Air Cleaner 7
Alternator 9
Blower Housing 7
Camshaft 3
Carburetor 5, 6
Controls 9
Crankshaft 3
Cylinder 2
Cylinder Head 4
Electric Starter 9
Engine Sump 2
Exhaust System 8
Flywheel 8
Fuel Supply 6
Gasket Set - Engine 4
Gasket Set - Valve 4
Governor Spring 9
Ignition 9
Intake Manifold 4
Kit - Carburetor Overhaul 5
Lubrication 2
Operator's Manual 2
Piston, Rings, Connecting Rod 3
Rewind Starter 8
Valves 4
Warning Label 2

Not for Reproduction

PRINTED IN U.S.A.

COPYRIGHT by BRIGGS & STRATTON CORPORATION
All rights reserved. No part of this material may be reproduced or transmitted, in any form or by any means, electronic or mechanical, including photocopying, recording or by any information storage and retrieval system, without permission in writing from Briggs & Stratton Corporation.

215800

1319 WARNING LABEL	1319A WARNING LABEL	1058 OPERATOR'S MANUAL
REQUIRED *when replacing parts with warning labels affixed.*	***REQUIRED*** *when replacing parts with warning labels affixed.*	

1036 EMISSIONS LABEL

1036A 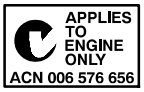

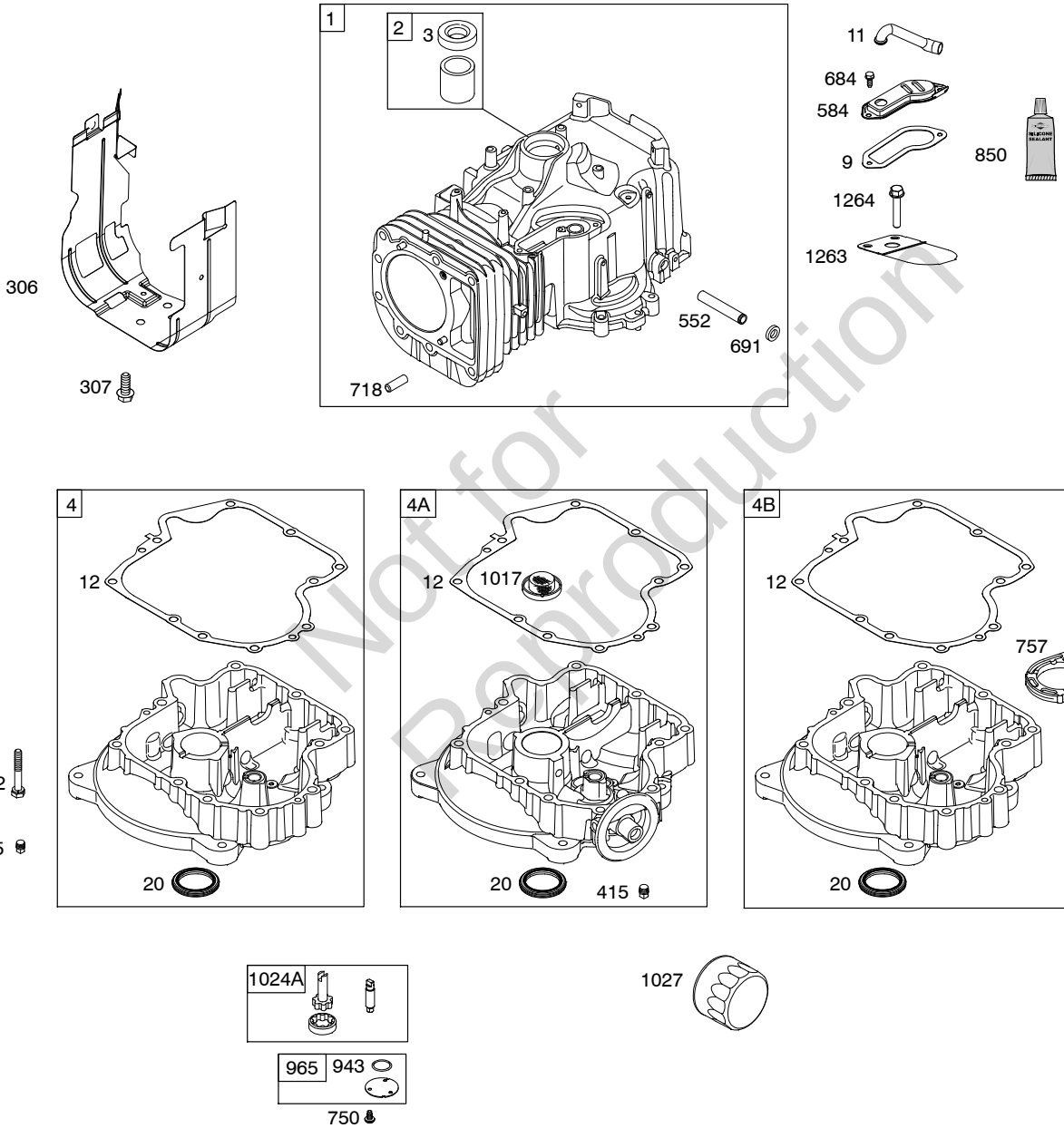

Not for Reproduction

Illustrations cover a range of engines. Parts shown without corresponding text may not be used on your specific engine.

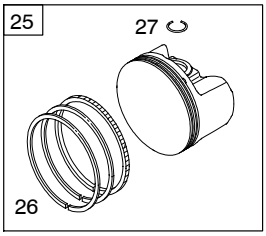

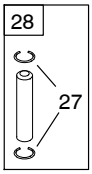

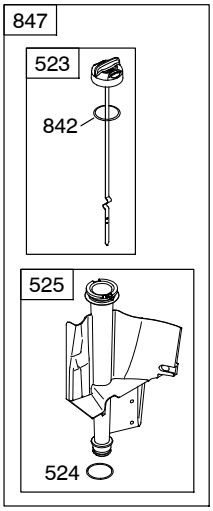

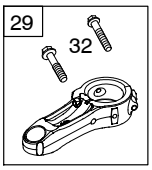

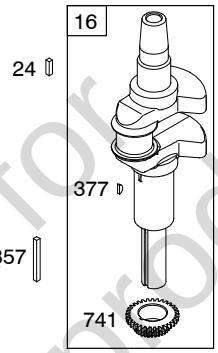

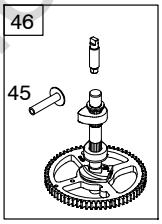

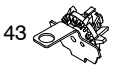

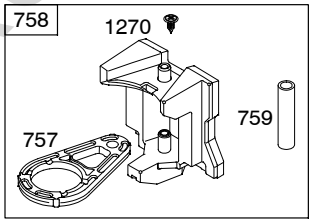

Not for Reproduction

215800

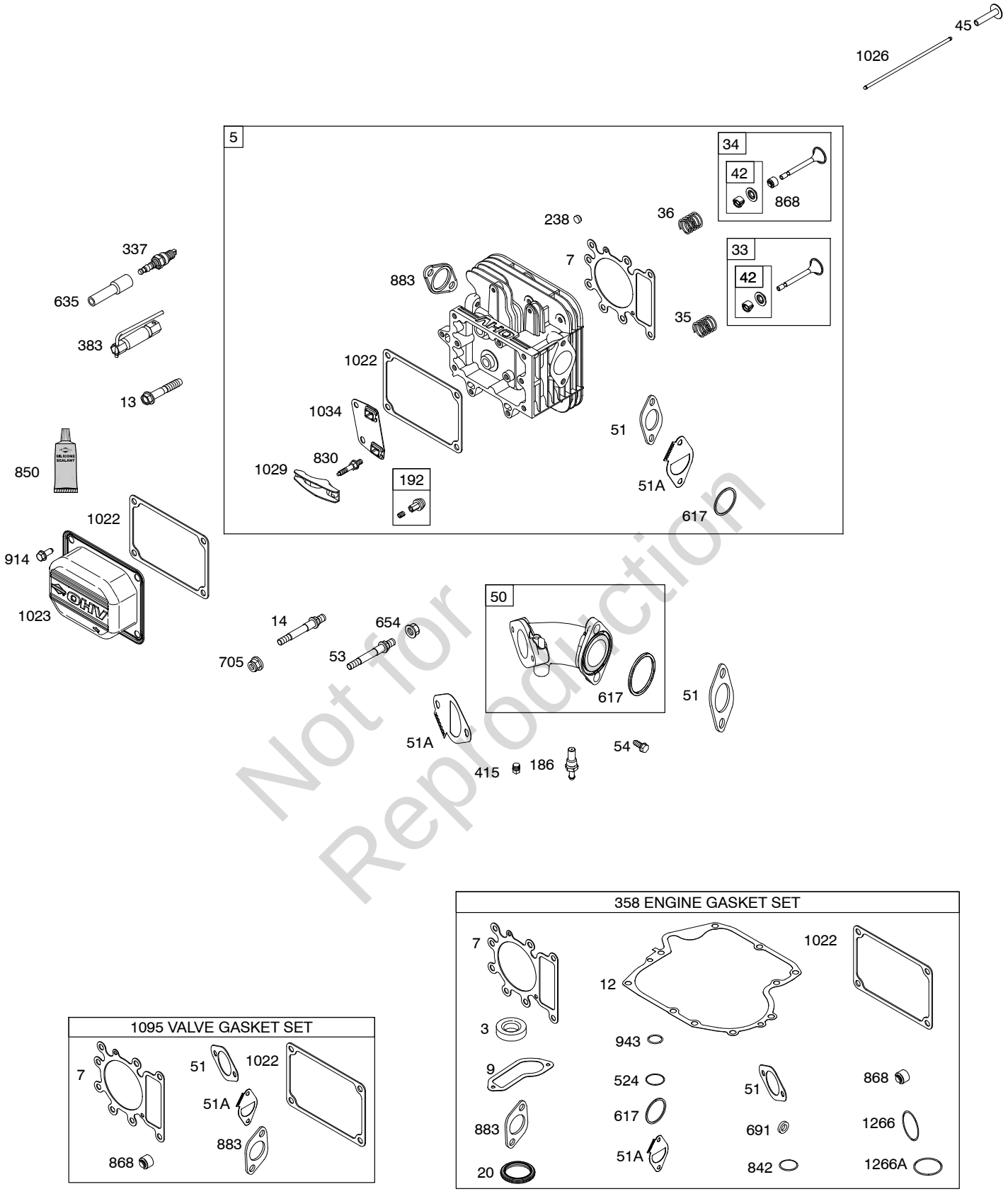

Not for Reproduction

1095 VALVE GASKET SET

358 ENGINE GASKET SET

Illustrations cover a range of engines. Parts shown without corresponding text may not be used on your specific engine.

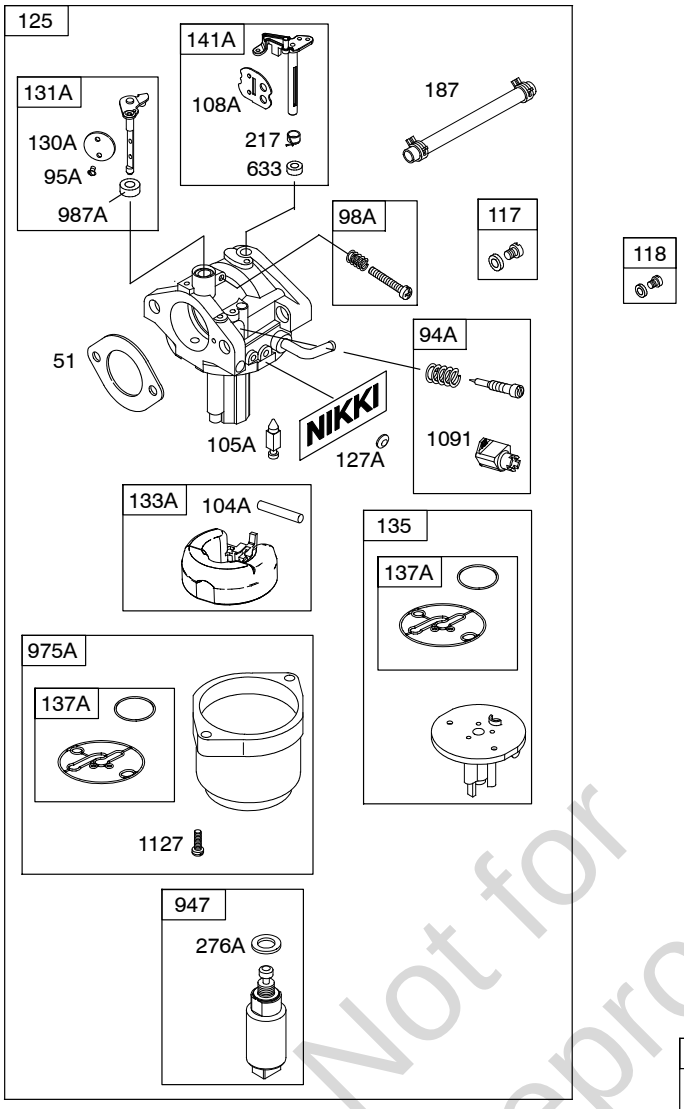

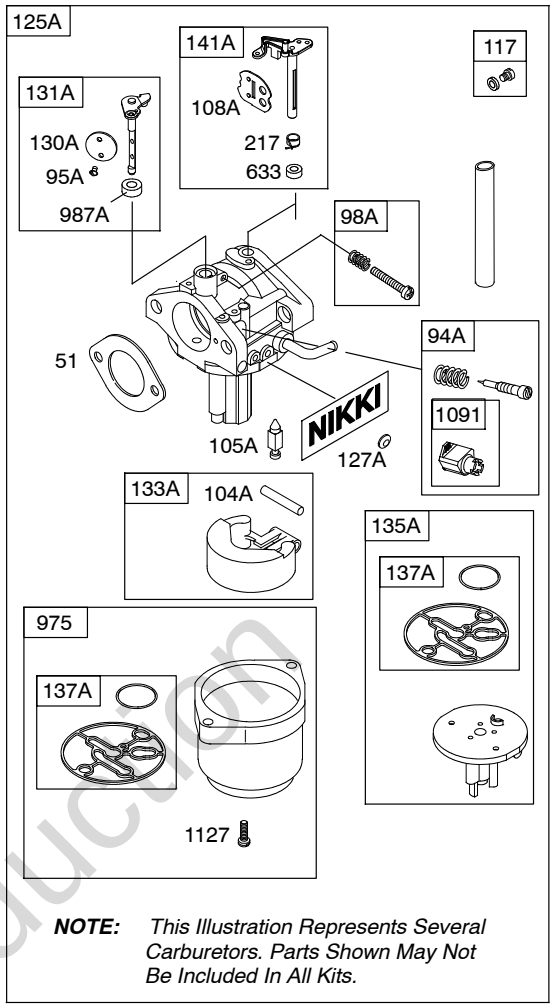

NOTE: *This Illustration Represents Several Carburetors. Parts Shown May Not Be Included In All Kits.*

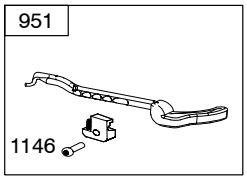

Not for Reproduction

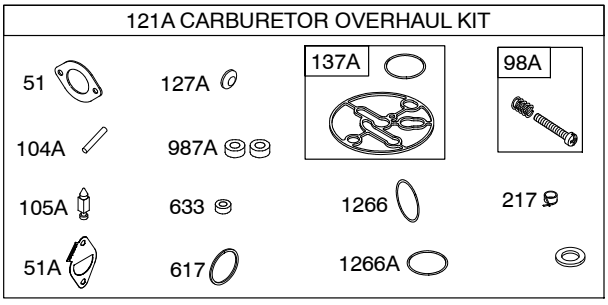

Illustrations cover a range of engines. Parts shown without corresponding text may not be used on your specific engine.

215800

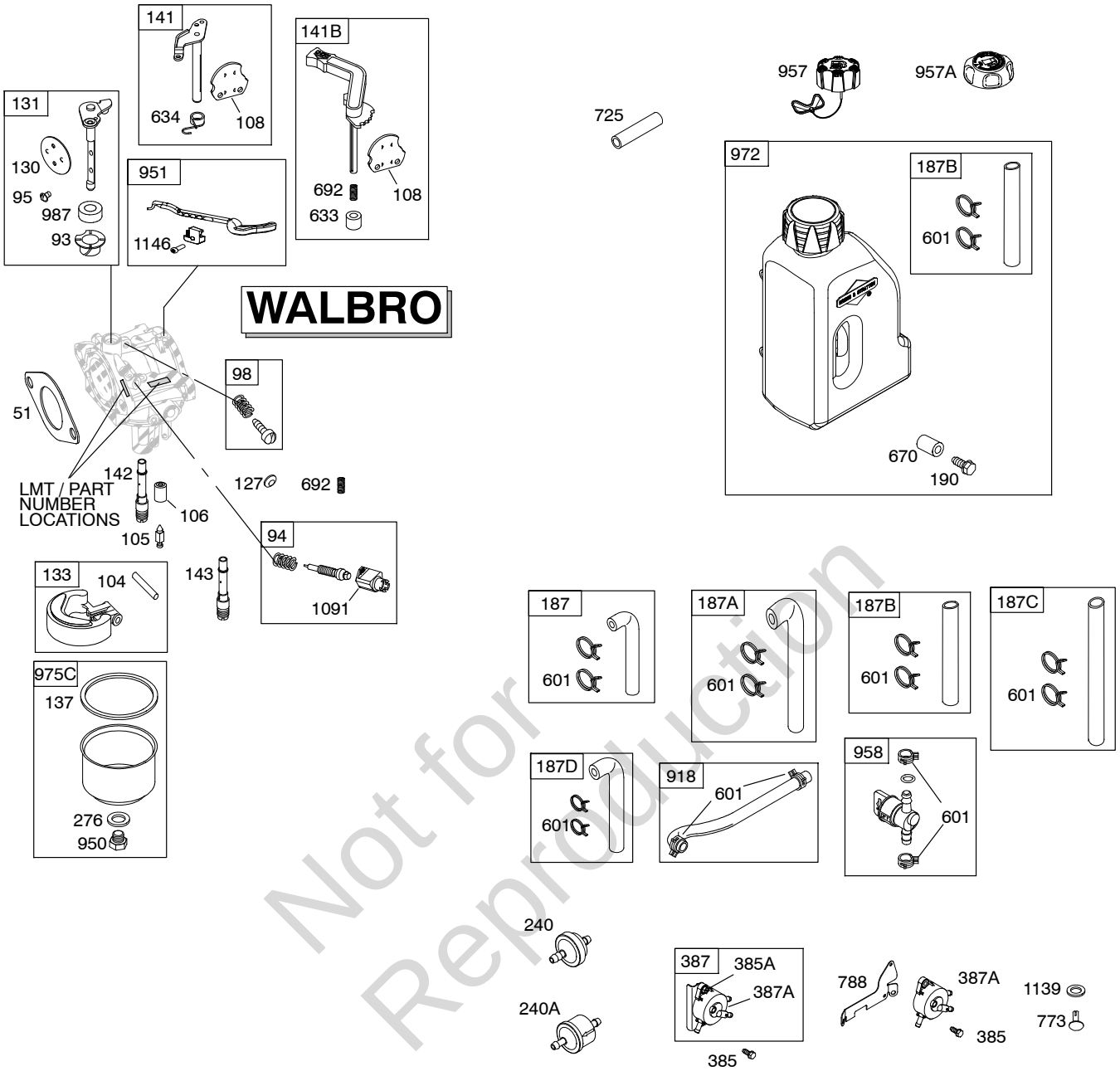

Not for Reproduction

Illustrations cover a range of engines. Parts shown without corresponding text may not be used on your specific engine.

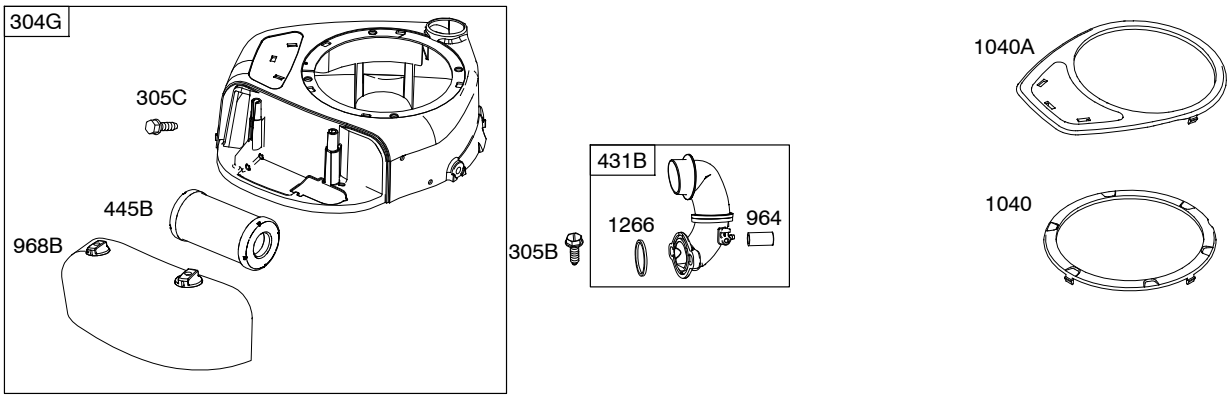

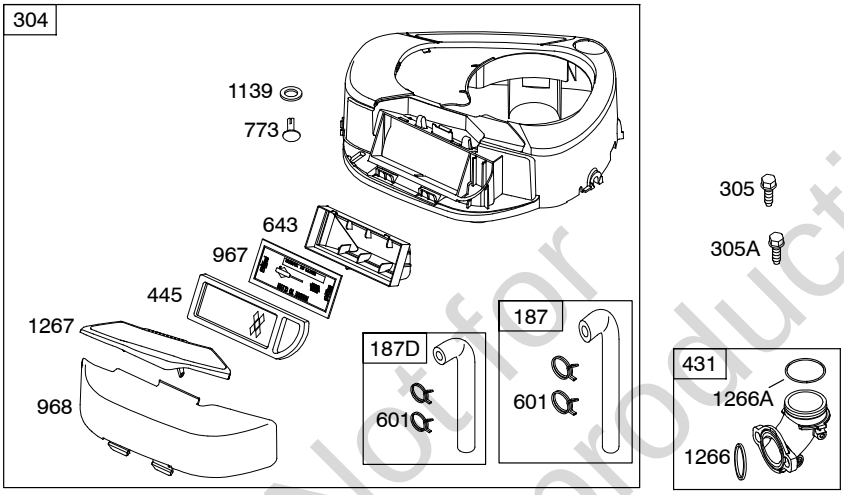

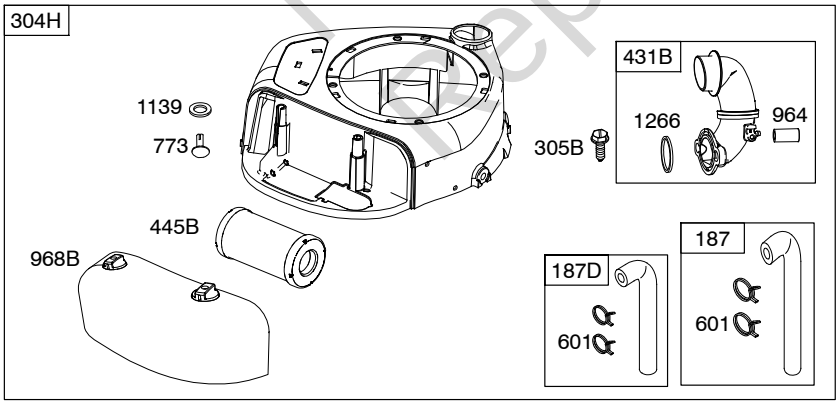

Not for reproduction

215800

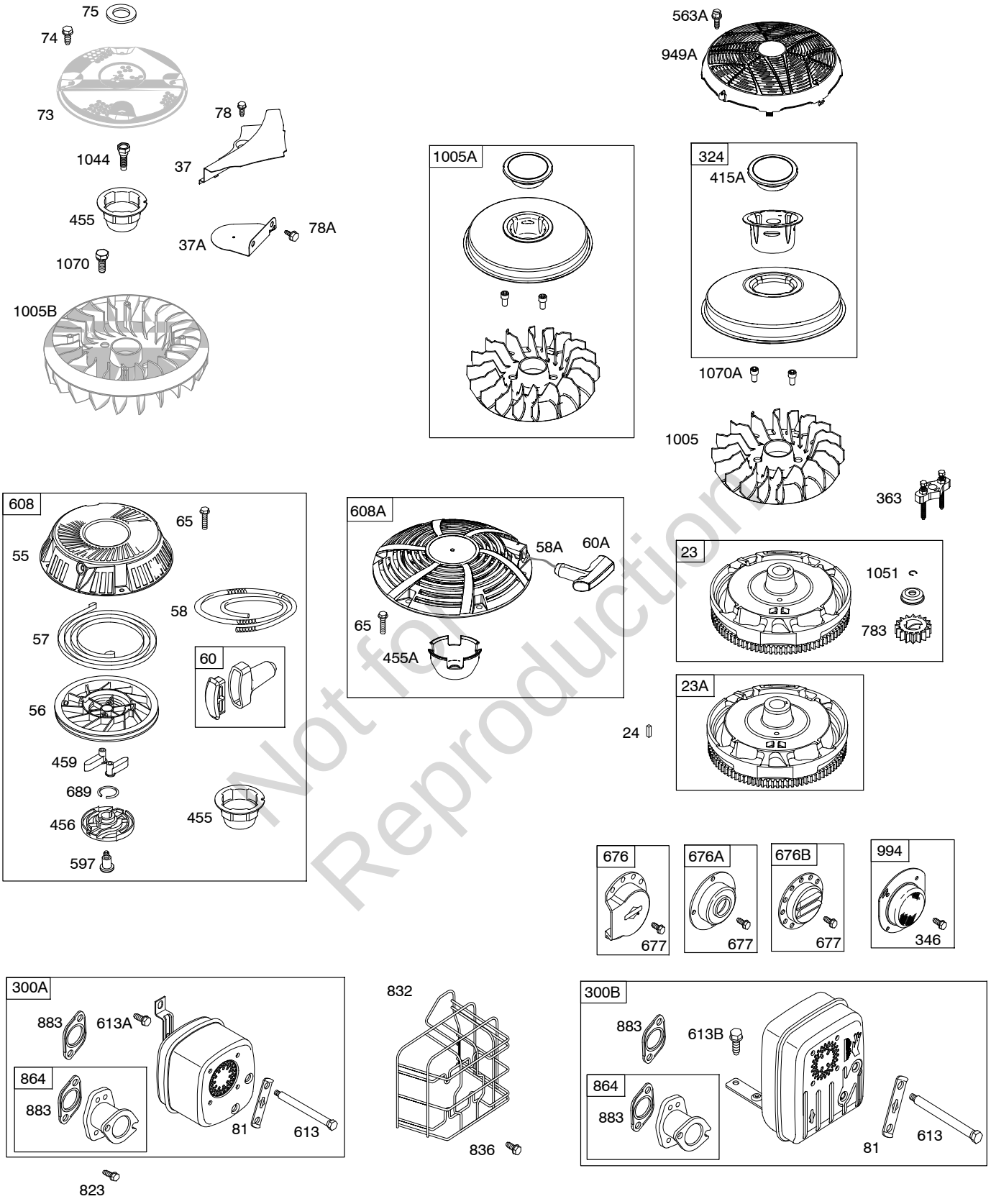

Not for Reproduction

Illustrations cover a range of engines. Parts shown without corresponding text may not be used on your specific engine.

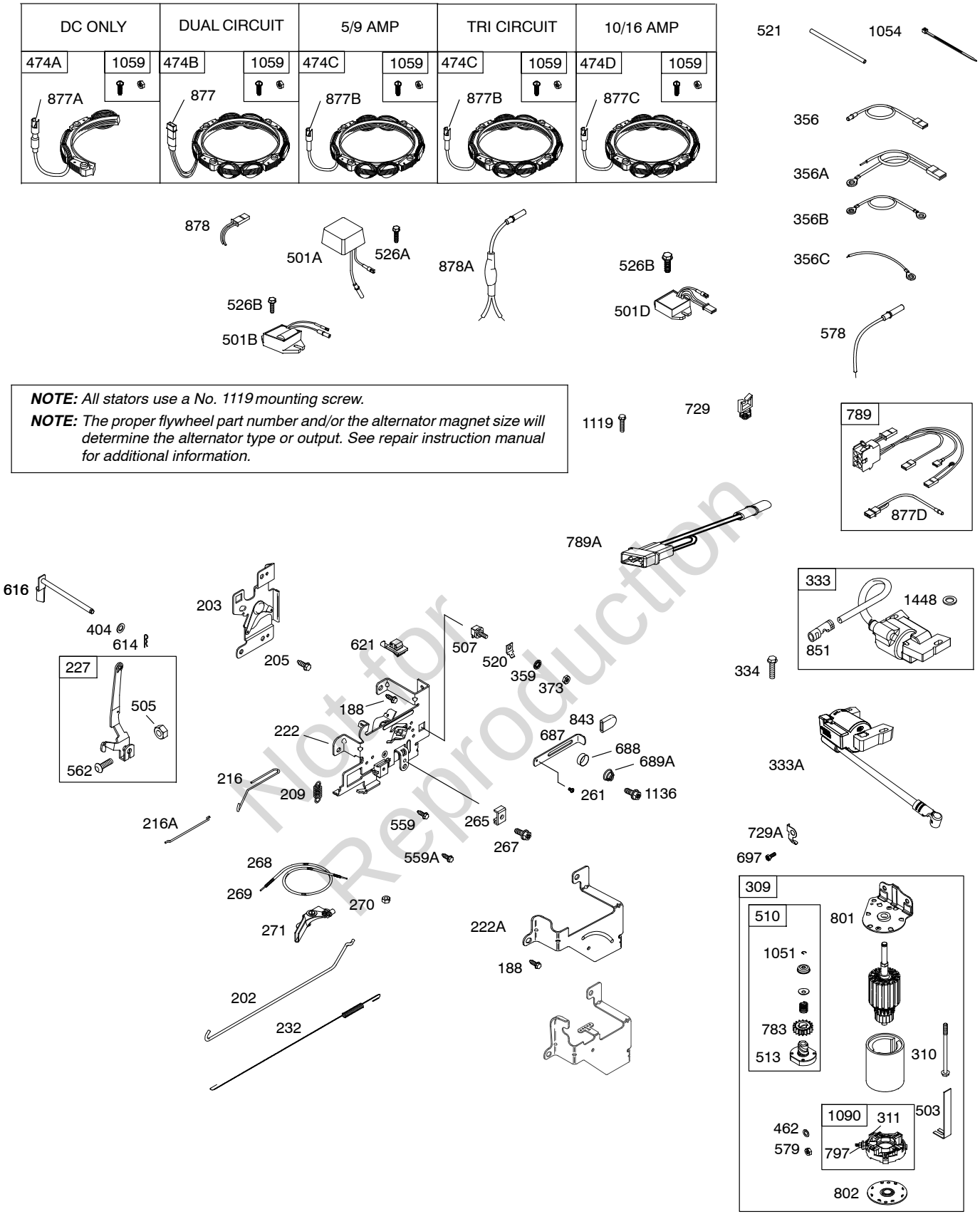

NOTE: *All stators use a No. 1119 mounting screw.*

NOTE: *The proper flywheel part number and/or the alternator magnet size will determine the alternator type or output. See repair instruction manual for additional information.*

Illustrations cover a range of engines. Parts shown without corresponding text may not be used on your specific engine.

215800

REF. NO.	PART NO.	DESCRIPTION
1	**697377**	Cylinder Assembly
2	**797673**	Kit-Bushing/Seal (Magneto Side)
3	**391086s**	Seal-Oil (Magneto Side)
4	**697106**	Sump-Engine
4A	**592849**	Sump-Engine (Used After Code Date 05100200). Used on Type No(s). 0116, 0121, 0125, 0131, 0160. **------ Note ------** **795957** Sump-Engine (Used Before Code Date 05100200). Used on Type No(s). 0116, 0121, 0131. Must Use Kit 795957, Includes Sump And Counterweight.
4B	**795940**	Sump-Engine
5	**796183**	Head-Cylinder
7	**273280S**	Gasket-Cylinder Head
9	**697109**	Gasket-Breather (Used Before Code Date 07071900). (After Date Code Use Liquid Sealant Reference 850)
11	**794683**	Tube-Breather
12	**697110**	Gasket-Crankcase (.015" Thick) (Standard)
13	**690360**	Screw (Cylinder Head)
14	**790560**	Stud (Cylinder Head)
15	**690946**	Plug-Oil Drain (3/8" Standard)
16	**591949**	Crankshaft (Used After Code Date 12071600). Used on Type No(s). 0015, 0025, 0026, 0101, 0105, 0108, 0113, 0118, 0130, 0161, 0162, 0163, 0191, 0193, 0223, 0274, 0313, 0314, 0334, 0335, 0948, 1180, 1529, 1536, 2110, 2113, 2114, 2115, 2116, 2117, 2118, 2120, 2466, 2467, 2507, 2551, 2553, 2578, 2604, 3015, 3025, 3026, 3120, 3332, 3551, 3553, 3578, 3604, 4116, 4117, 4119, 4332, 4529. **------ Note ------** **796146** Crankshaft (Used Before Code Date 12071700). Used on Type No(s). 0015, 0025, 0026, 0101, 0105, 0108, 0113, 0118, 0130, 0161, 0162, 0163, 0191, 0223, 0274, 0313, 0314, 0334, 0335, 0948, 1180, 1529, 1536, 2110, 2113, 2114, 2115, 2116, 2117, 2118, 2120, 2466, 2467, 2507, 2551, 2553, 2578, 2604, 3015, 3025, 3026, 3120, 3332, 3551, 3553, 3578, 3604, 4116, 4117, 4119, 4332, 4529. **591951** Crankshaft (Used After Code Date 12071600). Used on Type No(s). 2119.
		591953 Crankshaft Used on Type No(s). 0001, 0003, 0005, 0175, 0189. **591953** Crankshaft (Used After Code Date 12071600). Used on Type No(s). 0114, 0115, 0116, 0117, 0119, 0120, 0121, 0122, 0123, 0124, 0125, 0126, 0129, 0131, 0132, 0133, 0134, 0135, 0137, 0138, 0139, 0140, 0141, 0142, 0143, 0144, 0145, 0146, 0147, 0148, 0149, 0150, 0152, 0153, 0154, 0156, 0157, 0158, 0159, 0160, 0164, 0165, 0167, 0169, 0170, 0171, 0172, 0173, 0174, 0175, 0177, 0178, 0179, 0180, 0182, 0185, 0186, 0188, 0190, 0192, 0194, 0324, 0331, 0333, 0578, 0604, 1194, 3124, 3133, 3134, 3135, 3139, 3194, 4120, 4123, 4140, 4141, 4146, 4147, 4149, 4156, 4158, 4160, 4164, 4170.

Not for Reproduction

REF. NO.	PART NO.	DESCRIPTION
		697390 Crankshaft (Used Before Code Date 12071700). Used on Type No(s). 0114, 0115, 0116, 0117, 0119, 0120, 0121, 0122, 0123, 0124, 0125, 0126, 0129, 0131, 0132, 0133, 0134, 0135, 0137, 0138, 0139, 0140, 0141, 0142, 0143, 0144, 0145, 0146, 0147, 0148, 0149, 0150, 0152, 0153, 0154, 0156, 0157, 0158, 0159, 0160, 0164, 0165, 0167, 0169, 0170, 0171, 0172, 0173, 0174, 0175, 0177, 0178, 0179, 0180, 0182, 0185, 0186, 0188, 0190, 0192, 0194, 0324, 0331, 0333, 0578, 0604, 1194, 3124, 3133, 3134, 3135, 3139, 3194, 4120, 4123, 4140, 4141, 4146, 4147, 4149, 4156, 4158, 4160, 4164, 4170.
		591952 Crankshaft (Used After Code Date 12071600). Used on Type No(s). 0155, 3155, 4155.
		797508 Crankshaft (Used Before Code Date 12071700). Used on Type No(s). 0155, 3155, 4155.
20	**795387**	Seal-Oil (PTO Side)
22	**692125**	Screw (Crankcase Cover/Sump)
23	**591759**	Flywheel (Used After Code Date 12071600). Used on Type No(s). 0026, 0101, 0105, 0108, 0133, 0134, 0135, 0137, 0146, 0155, 0161, 0163, 0191, 0324, 0331, 0332, 0335, 0604, 0948, 1180, 1194, 1529, 1536, 2110, 2117, 2120, 2507, 2551, 2604, 3026, 3120, 3133, 3134, 3135, 3155, 3194, 3332, 3551, 3604, 4119, 4155, 4332, 4529.
		------ Note ------
		698281 Flywheel (Used Before Code Date 12071700). Used on Type No(s). 0026, 0101, 0105, 0108, 0133, 0134, 0135, 0137, 0146, 0155, 0161, 0163, 0191, 0324, 0331, 0332, 0335, 0604, 0948, 1180, 1194, 1529, 1536, 2110, 2117, 2120, 2507, 2551, 2604, 3026, 3120, 3133, 3134, 3135, 3155, 3194, 3332, 3551, 3604, 4119, 4155, 4332, 4529.
		591758 Flywheel (Used After Code Date 12071600). Used on Type No(s). 0193, 0194, 2118.
		698282 Flywheel (Used Before Code Date 12071700). Used on Type No(s). 0194, 2118.
		591761 Flywheel Used on Type No(s). 0001, 0175, 0189.
		591761 Flywheel (Used After Code Date 12071600). Used on Type No(s). 0003, 0025, 0125, 0129, 0132, 0140, 0142, 0143, 0144, 0145, 0149, 0150, 0152, 0153, 0156, 0159, 0169, 0170, 0173, 0174, 0175, 0178, 0179, 0182, 0186, 0188, 0274, 0314, 2114, 2119, 2467, 3025, 4117, 4140, 4146, 4149, 4156, 4170.
		693557 Flywheel (Used Before Code Date 12071700). Used on Type No(s). 0025, 0125, 0129, 0132, 0140, 0142, 0143, 0144, 0145, 0149, 0150, 0152, 0153, 0156, 0159, 0169, 0170, 0173, 0174, 0175, 0178, 0179, 0182, 0186, 0188, 0274, 0314, 2114, 2119, 2467, 3025, 4117, 4140, 4146, 4149, 4156, 4170.

Not for Reproduction

215800

REF. NO.	PART NO.	DESCRIPTION
		591760 Flywheel (Used After Code Date 12071600). Used on Type No(s). 0117, 0131, 0147, 0172, 4147.
		693556 Flywheel (Used Before Code Date 12071700). Used on Type No(s). 0117, 0131, 0147, 0172, 4147.
23A	**591950**	Flywheel (Used After Code Date 12071600). Used on Type No(s). 0005, 0015, 0113, 0114, 0115, 0116, 0118, 0119, 0120, 0121, 0122, 0123, 0124, 0126, 0130, 0138, 0139, 0141, 0148, 0154, 0157, 0158, 0160, 0162, 0164, 0165, 0167, 0171, 0177, 0180, 0185, 0190, 0192, 0223, 0313, 0333, 0334, 0578, 1194, 2113, 2115, 2116, 2466, 2553, 2578, 3015, 3124, 3139, 3553, 3578, 4116, 4120, 4123, 4141, 4158, 4160, 4164.
		------ Note ------
		693555 Flywheel (Used Before Code Date 12071700). Used on Type No(s). 0015, 0114, 0115, 0116, 0118, 0119, 0120, 0121, 0122, 0123, 0124, 0126, 0138, 0139, 0141, 0148, 0154, 0157, 0158, 0160, 0162, 0164, 0165, 0167, 0171, 0177, 0180, 0185, 0190, 0192, 0223, 0313, 0333, 0334, 0578, 2116, 2466, 2553, 2578, 3015, 3124, 3139, 3553, 3578, 4116, 4120, 4123, 4141, 4158, 4160, 4164.
		698283 Flywheel (Used Before Code Date 12071700). Used on Type No(s). 0113, 0130, 1194, 2113, 2115.
24	**591757**	Key-Flywheel (Used After Code Date 12071600).
		------ Note ------
		796335 Key-Flywheel (Used Before Code Date 12071700).
25	**797009**	Piston Assembly (Standard) Used on Type No(s). 0015, 0025, 0026, 0101, 0105, 0108, 0113, 0118, 0130, 0155, 0161, 0162, 0163, 0191, 0223, 0274, 0313, 0314, 0332, 0334, 0335, 0948, 1180, 1529, 1536, 2110, 2113, 2114, 2115, 2116, 2117, 2118, 2119, 2120, 2466, 2467, 2507, 2551, 2553, 2578, 2604, 3015, 3025, 3026, 3120, 3155, 3332, 3551, 3553, 3604, 4116, 4117, 4119, 4155, 4332, 4529.
		797010 Piston Assembly (.020" Oversize) Used on Type No(s). 0015, 0025, 0026, 0101, 0105, 0108, 0113, 0118, 0130, 0155, 0161, 0162, 0163, 0191, 0223, 0274, 0313, 0314, 0332, 0334, 0335, 0948, 1180, 1529, 1536, 2110, 2113, 2114, 2115, 2116, 2117, 2118, 2119, 2120, 2466, 2467, 2507, 2551, 2553, 2578, 2604, 3015, 3025, 3026, 3120, 3155, 3332, 3551, 3553, 3604, 4116, 4117, 4119, 4155, 4332, 4529.
		792307 Piston Assembly (Standard) Used on Type No(s). 0001, 0114, 0115, 0116, 0117, 0119, 0120, 0121, 0122, 0123, 0124, 0125, 0126, 0129, 0131, 0132, 0133, 0134, 0135, 0137, 0138, 0139, 0140, 0141, 0142, 0143, 0144, 0145, 0146, 0147, 0148, 0149, 0150, 0152, 0153, 0154, 0156, 0157, 0158, 0159, 0160, 0164, 0165, 0167, 0169, 0170, 0171, 0172, 0173, 0174, 0175, 0177, 0178, 0179, 0180, 0182, 0185, 0186, 0188, 0189, 0190, 0192, 0194, 0324, 0331, 0333, 0578, 0604, 1194, 3124, 3133, 3134, 3135, 3139, 3194, 4120, 4123, 4140, 4141, 4146, 4147, 4149, 4156, 4158, 4160, 4164, 4170.

Not for Reproduction

REF. NO.	PART NO.	DESCRIPTION
		792728 Piston Assembly (.020" Oversize) Used on Type No(s). 0001, 0114, 0115, 0116, 0117, 0119, 0120, 0121, 0122, 0123, 0124, 0125, 0126, 0129, 0131, 0132, 0133, 0134, 0135, 0137, 0138, 0139, 0140, 0141, 0142, 0143, 0144, 0145, 0146, 0147, 0148, 0149, 0150, 0152, 0153, 0154, 0156, 0157, 0158, 0159, 0160, 0164, 0165, 0167, 0169, 0170, 0171, 0172, 0173, 0174, 0175, 0177, 0178, 0179, 0180, 0182, 0185, 0186, 0188, 0189, 0190, 0192, 0194, 0324, 0331, 0333, 0578, 0604, 1194, 3124, 3133, 3134, 3135, 3139, 3194, 4120, 4123, 4140, 4141, 4146, 4147, 4149, 4156, 4158, 4160, 4164, 4170.
26	**797011**	Ring Set (Standard) Used on Type No(s). 0015, 0025, 0026, 0101, 0105, 0155, 0161, 0162, 0163, 0191, 0332, 0334, 0335, 0948, 1529, 1536, 2110, 2113, 2114, 2115, 2116, 2117, 2118, 2120, 2466, 2467, 2507, 2551, 2553, 3015, 3025, 3026, 3120, 3155, 3332, 3551, 3553, 3578, 3604, 4116, 4117, 4119, 4155, 4332, 4529. **------ Note ------** **797011** Ring Set (Standard) (Used After Code Date 09041500). Used on Type No(s). 0108, 0113, 0118, 0130, 0223, 0274, 0313, 0314, 0334, 1180, 2110, 2119, 2578, 2604. **792306** Ring Set (Standard) (Used Before Code Date 09041600 and After Code Date 08090100). Used on Type No(s). 0108, 0113, 0118, 0130, 0223, 0274, 0313, 0314, 0334, 1180, 2110, 2119, 2578, 2604. **698375** Ring Set (Standard) (Used Before Code Date 08090200). Used on Type No(s). 0108, 0113, 0118, 0130, 0223, 0274, 0313, 0314, 0334, 1180, 2110, 2119, 2578, 2604.
		797012 Ring Set (.020" Oversize) Used on Type No(s). 0015, 0025, 0026, 0101, 0105, 0155, 0161, 0162, 0163, 0191, 0332, 0334, 0335, 0948, 1529, 1536, 2110, 2113, 2114, 2115, 2116, 2117, 2118, 2120, 2466, 2467, 2507, 2551, 2553, 3015, 3025, 3026, 3120, 3155, 3332, 3551, 3553, 3578, 3604, 4117, 4119, 4155, 4332, 4529. **797012** Ring Set (.020" Oversize) (Used After Code Date 09041500). Used on Type No(s). 0108, 0113, 0118, 0130, 0223, 0274, 0313, 0314, 0334, 1180, 2110, 2119, 2578, 2604. **697120** Ring Set (.020" Oversize) (Used Before Code Date 09041600). Used on Type No(s). 0108, 0113, 0118, 0130, 0223, 0274, 0313, 0314, 0334, 1180, 2110, 2119, 2578, 2604.

Not for Reproduction

215800

REF. NO.	PART NO.	DESCRIPTION
		792306 Ring Set (Standard) Used on Type No(s). 0001, 0114, 0115, 0116, 0117, 0119, 0120, 0121, 0122, 0123, 0124, 0125, 0126, 0129, 0131, 0132, 0133, 0134, 0135, 0137, 0138, 0139, 0140, 0141, 0142, 0143, 0144, 0145, 0146, 0147, 0148, 0149, 0150, 0152, 0153, 0154, 0156, 0157, 0158, 0159, 0160, 0164, 0165, 0167, 0169, 0170, 0171, 0172, 0173, 0174, 0175, 0177, 0178, 0179, 0180, 0182, 0185, 0186, 0188, 0189, 0190, 0192, 0194, 0324, 0331, 0333, 0578, 0604, 1194, 3124, 3133, 3134, 3135, 3139, 3194, 4120, 4123, 4140, 4141, 4146, 4147, 4149, 4156, 4158, 4160, 4164, 4170.
		792643 Ring Set (.020" Oversize) Used on Type No(s). 0001, 0114, 0115, 0116, 0117, 0119, 0120, 0121, 0122, 0123, 0124, 0125, 0126, 0129, 0131, 0132, 0133, 0134, 0135, 0137, 0138, 0139, 0140, 0141, 0142, 0143, 0144, 0145, 0146, 0147, 0148, 0149, 0150, 0152, 0153, 0154, 0156, 0157, 0158, 0159, 0160, 0164, 0165, 0167, 0169, 0170, 0171, 0172, 0173, 0174, 0175, 0177, 0178, 0179, 0180, 0182, 0185, 0186, 0188, 0189, 0190, 0192, 0194, 0324, 0331, 0333, 0578, 0604, 1194, 3124, 3133, 3134, 3135, 3139, 3194, 4120, 4123, 4140, 4141, 4146, 4147, 4149, 4156, 4158, 4160, 4164, 4170.
27	**698469**	Lock-Piston Pin (Used After Code Date 02100300).
		------ Note ------
		698138 Lock-Piston Pin (Used Before Code Date 02100400).
28	**797013**	Pin-Piston Used on Type No(s). 0015, 0025, 0026, 0101, 0105, 0155, 0161, 0162, 0163, 0191, 0332, 0334, 0335, 0948, 1529, 1536, 2110, 2113, 2114, 2115, 2116, 2117, 2118, 2120, 2466, 2467, 2507, 2551, 2553, 3015, 3025, 3026, 3120, 3155, 3332, 3551, 3553, 3578, 3604, 4116, 4117, 4119, 4155, 4332, 4529.
		------ Note ------
		797013 Pin-Piston (Used After Code Date 09041500). Used on Type No(s). 0108, 0113, 0118, 0130, 0223, 0274, 0313, 0314, 0334, 1180, 2110, 2119, 2578, 2604.
		697099 Pin-Piston (Used Before Code Date 09041600). Used on Type No(s). 0108, 0113, 0118, 0130, 0223, 0274, 0313, 0314, 0334, 1180, 2110, 2119, 2578, 2604.

Not for Reproduction

REF. NO.	PART NO.	DESCRIPTION
		697099 Pin-Piston Used on Type No(s). 0001, 0114, 0115, 0116, 0117, 0119, 0120, 0121, 0122, 0123, 0124, 0125, 0126, 0129, 0131, 0132, 0133, 0134, 0135, 0137, 0138, 0139, 0140, 0141, 0142, 0143, 0144, 0145, 0146, 0147, 0148, 0149, 0150, 0152, 0153, 0154, 0156, 0157, 0158, 0159, 0160, 0164, 0165, 0167, 0169, 0170, 0171, 0172, 0173, 0174, 0175, 0177, 0178, 0179, 0180, 0182, 0185, 0186, 0188, 0189, 0190, 0192, 0194, 0324, 0331, 0333, 0578, 0604, 1194, 3124, 3133, 3134, 3135, 3139, 3194, 4120, 4123, 4140, 4141, 4146, 4147, 4149, 4156, 4158, 4160, 4164, 4170.
29	**791633**	Rod-Connecting (Standard)
32	**791118**	Screw (Connecting Rod)
33	**792868**	Valve-Exhaust (Chrome) (Used After Code Date 06120300). **------ Note ------** **695760** Valve-Exhaust (Used Before Code Date 06120400).
34	**791935**	Valve-Intake
35	**691279**	Spring-Valve (Intake)
36	**691279**	Spring-Valve (Exhaust)
37	**697352**	Guard-Flywheel
37A	**697626**	Guard-Flywheel (Electric Start)
42	**499586**	Keeper-Valve
43	**691968**	Slinger-Governor/Oil
45	**690564**	Tappet-Valve
46	**793880**	Camshaft
50	**592845**	Manifold-Intake
51	**692137**	Gasket-Intake
51A	**796081**	Gasket-Intake
53	**591260**	Stud (Carburetor) (Used After Code Date 11120100). **------ Note ------** **690227** Stud (Carburetor) (Used Before Code Date 11120200).
54	**691148**	Screw (Intake Manifold)
55	**695130**	Housing-Rewind Starter (Used Before Code Date 12082700).
56	**695129**	Pulley-Starter (Used Before Code Date 12082700).
57	**695131**	Spring-Rewind Starter (Used Before Code Date 12082700).
58	**695132**	Rope-Starter (Used Before Code Date 12082700).
58A	**697316**	Rope-Starter (Used After Code Date 12082600).
60	**493926**	Grip-Starter Rope
60A	**281434s**	Grip-Starter Rope
65	**690940**	Screw (Rewind Starter) (Used After Code Date 12082600). **------ Note ------** **690837** Screw (Rewind Starter) (Used After Code Date 07040800 and Before Code Date 12082700). **697725** Screw (Rewind Starter) (Used Before Code Date 07040900).
73		Screen-Rotating (Used Before Code Date 07040900). (No Longer Available. See Reference 1005A For Service Flywheel Fan)
74	**697897**	Screw (Rotating Screen)
75	**690582**	Washer (Flywheel)
78	**691693**	Screw (Flywheel Guard)
78A	**690364**	Screw (Flywheel Guard) (Electric Start)
81	**691178**	Lock-Muffler Screw
93	**690602**	Bushing-Throttle Shaft
94	**794146**	Kit-Idle Mixture (Walbro)
94A	**793610**	Kit-Idle Mixture (Nikki)
95	**691636**	Screw (Throttle Valve) (Walbro)
95A	**690718**	Screw (Throttle Valve)(Nikki)
98	**495800**	Kit-Idle Speed (Walbro)
98A	**695408**	Kit-Idle Speed (Nikki)
104	**690525**	Pin-Float Hinge (Walbro)
104A	**694918**	Pin-Float Hinge (Nikki)
105	**231855s**	Valve-Float Needle (Walbro)
105A	**696136**	Valve-Float Needle (Nikki)
106	**690577**	Seat-Inlet (Walbro)(Gravity Feed) **------ Note ------** **691780** Seat-Inlet (Walbro)(Pump Feed)
108	**691227**	Valve-Choke (Walbro)
108A	**698773**	Valve-Choke (Nikki)

Not for Reproduction

215800

REF. NO.	PART NO.	DESCRIPTION
117	**591936**	Jet-Main (Standard) (Used After Code Date 08121400).
		------ Note ------
		794352 Jet-Main (Standard) (Used Before Code Date 08121500 and After Code Date 07122500).
		699897 Jet-Main (Standard) (Used Before Code Date 07122600).
118	**698788**	Jet-Main (High Altitude) (Used After Code Date 08121400).
		------ Note ------
		791405 Jet-Main (High Altitude) (Used Before Code Date 08121500 and After Code Date 07122500).
		699898 Jet-Main (High Altitude) (Used Before Code Date 07122600).
121	**790031**	Kit-Carburetor Overhaul (Walbro)
121A	**796184**	Kit-Carburetor Overhaul (Nikki)
125	**593433**	Carburetor Used on Type No(s). 0003.
125A	**593432**	Carburetor
		------ Note ------
		593432 Carburetor (Used After Code Date 13092300). Used on Type No(s). 0001, 0005, 0165, 0175, 0177, 0178, 0179, 0182, 0185, 0186, 0188, 0189, 0190, 0192, 0193, 3025, 3026, 3120, 3133, 3139, 4116, 4117, 4120, 4123, 4140, 4141, 4146, 4147, 4149, 4155, 4156, 4160, 4332.
		590399 Carburetor Used on Type No(s). 0025, 0026, 0114, 0115, 0116, 0118, 0119, 0121, 0123, 0129, 0131, 0132, 0133, 0140, 0141, 0142, 0144, 0145, 0146, 0147, 0148, 0149, 0150, 0152, 0153, 0154, 0155, 0156, 0158, 0159, 0162, 0167, 0169, 0170, 0171, 0172, 0173, 0174, 0332, 0333, 2113, 2116, 2117, 2120, 3116, 3123, 3139, 3154, 3155, 3158, 3160, 3165, 3332, 3333, 4113, 4114, 4118, 4129, 4132, 4145, 4158, 4164, 4167, 4170,.
		590399 Carburetor (Used After Code Date 08121400 and Before Code Date 13092400). Used on Type No(s). 0001, 0005, 0165, 0175, 0177, 0178, 0179, 0182, 0185, 0186, 0188, 0189, 0190, 0192, 0193, 3025, 3026, 3120, 3133, 3139, 4116, 4117, 4120, 4123, 4140, 4141, 4146, 4147, 4149, 4155, 4156, 4160, 4332.
		794653 Carburetor (Used Before Code Date 08121500).
127	**694524**	Plug-Welch (Walbro)
127A	**690727**	Plug-Welch (Nikki)
130	**790024**	Valve-Throttle (Walbro)
130A	**698774**	Valve-Throttle (Nikki)
131	**790901**	Kit-Throttle Shaft (Walbro)
131A	**698776**	Kit-Throttle Shaft (Nikki)
133	**494381**	Float-Carburetor (Walbro)
133A	**694914**	Float-Carburetor (Nikki)
135	**796400**	Tube-Fuel Transfer
135A	**698780**	Tube-Fuel Transfer (Nikki)(Gravity Feed)
		------ Note ------
		792022 Tube-Fuel Transfer (Nikki)(Pump Feed)
137	**281165s**	Gasket-Float Bowl (Walbro)
137A	**698781**	Gasket-Float Bowl (Nikki)
141	**790902**	Kit-Choke Shaft (Walbro) (Used After Code Date 07010700). Used on Type No(s). 0114, 0115, 0120, 0129.
141A	**698778**	Kit-Choke Shaft (Nikki)
141B	**790903**	Kit-Choke Shaft (Walbro) (Used Before Code Date 07010800). Used on Type No(s). 0114, 0115.
142	**790025**	Nozzle-Carburetor (Standard)
143	**790028**	Nozzle-Carburetor (High Altitude)
186	**794873**	Connector-Hose
187	**791805**	Line-Fuel (10-1/4 Inches Long) (Formed)
187A	**791806**	Line-Fuel (21 Inches Long) (Formed)
187B	**791766**	Line-Fuel (15 Inches Long)(Cut To Required Length)
187C	**791745**	Line-Fuel (23 Inches Long)(Cut To Required Length)
187D	**791744**	Line-Fuel (14 Inches Long)(Formed)
188	**691693**	Screw (Control Bracket)
190	**796174**	Screw (Fuel Tank)

Not for Reproduction

REF. NO.	PART NO.	DESCRIPTION
192	**691986**	Adjuster-Rocker Arm
202	**691841**	Link-Mechanical Governor
203	**691381**	Crank-Bell
205	**691693**	Screw (Bell Crank)
209	**792813**	Spring-Governor Used on Type No(s). 0001, 0005, 0015, 0025, 0026, 0108, 0114, 0115, 0118, 0119, 0122, 0123, 0129, 0130, 0132, 0139, 0140, 0141, 0142, 0143, 0144, 0145, 0146, 0147, 0148, 0149, 0150, 0152, 0153, 0154, 0156, 0157, 0159, 0160, 0162, 0164, 0167, 0169, 0170, 0171, 0172, 0173, 0174, 0175, 0177, 0178, 0179, 0180, 0182, 0185, 0186, 0188, 0189, 0190, 0192, 0193, 0334, 0578, 0604, 0948, 2113, 2114, 2115, 2116, 2117, 2118, 2578, 2604, 3015, 3025, 3026, 3139, 3578, 3604, 4116, 4117, 4120, 4123, 4140, 4141, 4146, 4147, 4149, 4156, 4160, 4164, 4170. **------ Note ------** **691278** Spring-Governor Used on Type No(s). 2110. **792602** Spring-Governor Used on Type No(s). 0003, 0101, 0113, 0120, 0121, 0126, 0131, 0137, 0161, 0163, 0191, 0194, 0223, 0274, 0324, 1529, 1536, 2119, 2466, 2467, 2507, 4529.
		796260 Spring-Governor Used on Type No(s). 0105, 0116, 0117, 0125, 0133, 0138, 0155, 0158, 0165, 0332, 0333, 1180, 2120, 2551, 2553, 3120, 3133, 3155, 3332, 3551, 3553, 4119, 4155, 4158, 4332. **690576** Spring-Governor Used on Type No(s). 0135, 0313, 0314, 0331, 3135. **260902** Spring-Governor Used on Type No(s). 0124, 0134, 0335, 3124, 3134. **796261** Spring-Governor Used on Type No(s). 1194, 3194.
216	**691840**	Link-Choke
216A	**691281**	Link-Choke (Bell Crank) Used on Type No(s). 0025, 0026, 0119, 0120, 0121, 0123, 0124, 0131, 0143, 0144, 0145, 0148, 0149, 0152, 0153, 0154, 0157, 0159, 0161, 0164, 0175, 0179, 0185, 0186, 2114, 2116, 2117, 3025, 3026, 3124, 4116, 4117, 4120, 4123, 4149, 4164.
217	**695409**	Spring-Choke Return
222	**694042**	Bracket-Control
222A	**694335**	Bracket-Control Used on Type No(s). 0149, 0164, 2119, 4119, 4149.
227	**691374**	Lever-Governor Control **------ Note ------** **694339** Lever-Governor Control Used on Type No(s). 0149, 0164, 2119, 4149.
232	**691842**	Spring-Governor Link
238	**691843**	Cap-Valve
240	**394358s**	Filter-Fuel (White, 75 Microns) Used on Type No(s). 0015, 0105, 0108, 0113, 0122, 0124, 0130, 0134, 0135, 0137, 0143, 0157, 0161, 0163, 0180, 0191, 0194, 0223, 0274, 0313, 0314, 0324, 0331, 0334, 0335, 0578, 0604, 0948, 1180, 1194, 1529, 1536, 2115, 2466, 2467, 2507, 2551, 2553, 2578, 2604, 3015, 3124, 3134, 3135, 3194, 3551, 3553, 3578, 3604, 4119, 4529. **------ Note ------** **298090s** Filter-Fuel Used on Type No(s). 0101.
240A	**691035**	Filter-Fuel (Clear, 40 Microns)
261	**697176**	Screw (Control Slide)
265	**691024**	Clamp-Casing
267	**794904**	Screw (Casing Clamp)
268	**691025**	Casing-Control Wire (Cut To Required Length)
269	**691026**	Wire-Control (Cut To Required Length)
270	**691027**	Nut (Control Wire Casing)
271	**691028**	Lever-Control
276	**692255**	Washer-Sealing
276A	**695410**	Washer-Sealing
300A	**796000**	Muffler
300B	**795997**	Muffler Used on Type No(s). 0113, 0114, 0129, 0130, 0223, 0274.
304		Housing-Blower (Compatible With Panel Style Filter. No Longer Available. See Reference 304H For Replacement Kit).

Not for Reproduction

215800

REF. NO.	PART NO.	DESCRIPTION
304G	**591641**	Housing-Blower (Black-Compatible With Canister Style Filter)
304H	**591906**	Housing-Blower
305	**697102**	Screw (Blower Housing)
305A	**793376**	Screw (Non-Grommet Style Blower Housing)
305B	**795891**	Screw (Blower Housing To Intake Elbow)
305C	**799370**	Screw (Grommet Style Blower Housing)
306	**592778**	Shield-Cylinder
307	**691693**	Screw (Cylinder Shield)
309	**693551**	Motor-Starter
310	**690323**	Screw (Starter Motor)
311	**497608**	Brush Set
324	**796308**	Screen-Rotating (Used After Code Date 07040800).
333	**799650**	Armature-Magneto
333A	**592841**	Armature-Magneto Used on Type No(s). 0003, 0191, 0194, 0335, 0948, 1529, 3026, 3120, 3133, 3134, 3135, 3194, 3551, 4119, 4155, 4332.
334	**691061**	Screw (Magneto Armature)
337	**491055S**	Plug-Spark (Resistor)
		------ Note ------
		691043 Plug-Spark (EMS) Used on Type No(s). 0003, 0105, 0116, 0119, 0120, 0121, 0122, 0123, 0124, 0125, 0126, 0130, 0131, 0133, 0134, 0138, 0142, 0143, 0152, 0153, 0155, 0157, 0158, 0160, 0163, 0165, 0179, 0180, 0191, 0192, 0194, 0313, 0314, 0331, 0332, 0333, 0334, 0335, 0604, 1180, 1194, 1536, 2120, 3120, 3124, 3133, 3134, 3155, 3194, 3332, 4119, 4120, 4123, 4155, 4158, 4160, 4332.
		792015 Plug-Spark (Resistor-EMS) Used on Type No(s). 0135, 0137, 0159, 0161, 2551, 2553, 3135, 3551, 3553.
346	**794845**	Screw (Spark Arrestor)
356	**697397**	Wire-Stop
		------ Note ------
		792910 Wire-Stop Used on Type No(s). 2119.
356A	**398808**	Wire-Stop
356B	**697089**	Wire-Stop
356C	**399222**	Wire-Stop
357	**691483**	Key-Drive Pulley
358	**796181**	Gasket Set-Engine
359	**691077**	Washer (Ground Terminal)
363	**19203**	Puller-Flywheel
373	**691612**	Nut (Ground Terminal)
377	**691639**	Key-Timing
383	**19576s**	Wrench-Spark Plug
385	**694476**	Screw (Fuel Pump)
385A	**690297**	Screw (Fuel Pump)
387	**697090**	Pump-Fuel (Includes Mounting Bracket) (Used Before Code Date 08073000).
387A	**808656**	Pump-Fuel (Used After Code Date 08072900).
404	**691691**	Washer (Governor Crank)
415	**794903**	Plug (Manifold)
415A	**794129**	Plug (Cover/Retainer)
431	**697122**	Elbow-Intake (Compatible With Panel Style Filter)
431B	**797901**	Elbow-Intake (EVAP) (Compatible With Canister Style Filter)
445	**797007**	Filter-Air Cleaner Cartridge (Flat Panel Style)
445B	**591583**	Filter-Air Cleaner Cartridge (Canister Style)
455	**695113**	Cup-Flywheel (Used Before Code Date 12082700).
		------ Note ------
		695113 Cup-Flywheel Used on Type No(s). 4116.
455A	**796615**	Cup-Flywheel (Used After Code Date 12082700).
456	**695128**	Plate-Pawl Friction (Used Before Code Date 12082700).
459	**281505S**	Pawl-Ratchet (Used Before Code Date 12082700).
462	**691261**	Washer (Starter Cable)
474A	**592828**	Alternator (DC Only)
474B	**592831**	Alternator (Dual Circuit)

Not for Reproduction

REF. NO.	PART NO.	DESCRIPTION
474C	**592829**	Alternator (5/9 Amp. Regulated Or Tri Circuit)
474D	**696458**	Alternator (10/16 Amp. Regulated)
501A	**794360**	Regulator (5/9 Amp.)
501B	**698315**	Regulator (9 Amp. Battery-Less)
501D	**845907**	Regulator (10/16 Amp.)
503	**691532**	Strap-Starter
505	**691251**	Nut (Governor Control Lever)
507	**691972**	Insulator
510	**693699**	Drive-Starter
513	**692024**	Clutch-Drive
520	**691084**	Terminal-Ground
521	**690581**	Shield-Cable
523	**699908**	Dipstick
524	**691032**	Seal-Dipstick Tube
525	**697184**	Tube-Dipstick Used on Type No(s). 0015, 0101, 0105, 0113, 0122, 0124, 0130, 0134, 0135, 0137, 0143, 0157, 0161, 0163, 0180, 0191, 0194, 0223, 0274, 0313, 0314, 0324, 0331, 0334, 0335, 0578, 0604, 0948, 1180, 1194, 1529, 1536, 2115, 2466, 2467, 2507, 2551, 2553, 2578, 2604, 3015, 3124, 3134, 3135, 3194, 3551, 3553, 3578, 3604, 4119, 4529.
		------ Note ------
		697085 Tube-Dipstick Used on Type No(s). 0001, 0025, 0026, 0108, 0114, 0115, 0116, 0117, 0118, 0119, 0120, 0121, 0123, 0125, 0126, 0129, 0131, 0132, 0133, 0138, 0139, 0140, 0141, 0142, 0144, 0145, 0146, 0147, 0148, 0149, 0150, 0152, 0153, 0154, 0155, 0156, 0158, 0159, 0160, 0162, 0164, 0165, 0167, 0169, 0170, 0171, 0172, 0173, 0174, 0175, 0177, 0178, 0179, 0182, 0185, 0186, 0188, 0189, 0190, 0192, 0332, 0333, 2110, 2113, 2114, 2116, 2117, 2118, 2119, 2120, 3025, 3026, 3120, 3133, 3139, 3155, 3332, 4116, 4117, 4120, 4123, 4140, 4141, 4146, 4147, 4149, 4155, 4156, 4158, 4160, 4164, 4170, 4332.
526A	**697088**	Screw (Regulator)
526B	**697348**	Screw (Regulator)
552	**697144**	Bushing-Governor Crank
559	**697561**	Screw (Remote Choke Stop) (Length .375 Inches)
559A	**693675**	Screw (Remote Choke Stop) (Length .419 Inches)
562	**691119**	Bolt (Governor Control Lever)
563A	**799359**	Screw (Debris Guard)
578	**692306**	Wire Assembly
579	**691029**	Nut (Starter Cable)
584	**794682**	Cover-Breather Passage (Use With Liquid Sealant Reference 850)
597	**691696**	Screw (Pawl Friction Plate) (Used Before Code Date 12082700).
601	**791850**	Clamp-Hose (Green)
		------ Note ------
		691038 Clamp-Hose (Black)
608	**593939**	Starter-Rewind (Metal) (Used Before Code Date 12082700).
		------ Note ------
		593939 Starter-Rewind (Metal) Used on Type No(s). 4116.
608A	**591606**	Starter-Rewind (Used After Code Date 12082600).
613	**691416**	Screw (Muffler)
613A	**691678**	Screw (Muffler)
613B	**690297**	Screw (Muffler)
614	**691620**	Pin-Cotter
616	**692012**	Crank-Governor
617	**692138**	Seal-O Ring (Intake Manifold)

Not for Reproduction

215800

REF. NO.	PART NO.	DESCRIPTION
621	**692310**	Switch-Stop
633	**699813**	Seal-Choke/Throttle Shaft (Nikki)
		------ Note ------
		690597 Seal-Choke/Throttle Shaft (Walbro)
634	**690802**	Spring/Seal Assembly (Walbro)
635	**691909**	Boot-Spark Plug
643	**697155**	Retainer-Air Filter
		------ Note ------
		792909 Retainer-Air Filter Used on Type No(s). 2119.
654	**690958**	Nut (Carburetor)
670	**796175**	Spacer-Fuel Tank
676	**795036**	Deflector-Muffler (Side Out)
676A	**396903**	Deflector-Muffler (Direct Out)
676B	**795038**	Deflector-Muffler (Louvered)
677	**690661**	Screw (Muffler Deflector)
684	**697157**	Screw (Breather Assembly)
687	**697175**	Slide-Control
688	**690395**	Cap-Friction
689	**691855**	Spring-Friction (Used Before Code Date 12082700).
689A	**690529**	Spring-Friction Used on Type No(s). 0005, 0114, 0115, 0129, 0190, 2113, 2115.
691	**692407**	Seal-Governor Shaft
692	**691301**	Spring-Detent
697	**791680**	Screw (Drive Cap)
705	**790561**	Nut (Fuel Tank)
718	**690959**	Pin-Locating
725	**690403**	Shield-Heat
729	**691335**	Clip-Wire (Wire Retainer)
729A	**691224**	Clip-Wire (Starter Motor)
741	**697128**	Gear-Timing
750	**790832**	Screw (Oil Pump Cover)
757	**793242**	Link-Counterweight
758	**697391**	Counterweight (Used After Code Date 05100200).
		------ Note ------
		697391 Counterweight (Used After Code Date 05100200). Used on Type No(s). 0116, 0121.
		795940 Counterweight (Used Before Code Date 05100300). Must Use Kit 795940, Includes Sump And Counterweight.
		795957 Counterweight (Used Before Code Date 05100300). Must Use Kit 795957, Includes Sump And Counterweight. Used on Type No(s). 0116, 0121.
759	**697392**	Pin-Counterweight
773	**796448**	Retainer
783	**693713**	Gear-Pinion
788	**699347**	Bracket-Fuel Pump (Used Before Code Date 08073000).
789	**698329**	Harness-Wiring
789A	**696576**	Harness-Wiring
797	**693167**	Nut (Brush Retainer)
801	**691283**	Cap-Drive
802	**691286**	Cap-End
823	**698941**	Screw (Muffler Adapter)
830	**691095**	Stud-Rocker Arm
832	**790244**	Guard-Muffler
836	**690367**	Screw (Muffler Guard)
842	**691031**	Seal-O Ring (Dipstick Tube)
843	**697158**	Sleeve-Lever
847	**790442**	Dipstick/Tube Assembly Used on Type No(s). 0015, 0101, 0105, 0113, 0122, 0124, 0130, 0134, 0135, 0137, 0143, 0157, 0161, 0163, 0180, 0191, 0194, 0223, 0274, 0313, 0314, 0324, 0331, 0334, 0335, 0578, 0604, 0948, 1180, 1194, 1529, 1536, 2115, 2466, 2467, 2507, 2551, 2553, 2578, 2604, 3015, 3124, 3134, 3135, 3194, 3551, 3553, 3578, 3604, 4119, 4529.
		------ Note ------
		790443 Dipstick/Tube Assembly Used on Type No(s). 0001, 0025, 0026, 0108, 0114, 0115, 0116, 0117, 0118, 0119, 0120, 0121, 0123, 0125, 0126, 0129, 0131, 0132, 0133, 0138, 0139, 0140, 0141, 0142, 0144, 0145, 0146, 0147, 0148, 0149, 0150, 0152, 0153, 0154, 0155, 0156, 0158, 0159, 0160, 0162, 0164, 0165, 0167, 0169, 0170, 0171, 0172, 0173, 0174, 0175, 0177, 0178, 0179, 0182, 0185, 0186, 0188, 0189, 0190, 0192, 0332, 0333, 2110, 2113, 2114, 2116, 2117, 2118, 2119, 2120, 2467, 3025, 3026, 3120, 3133, 3139, 3155, 3332, 4116, 4117, 4120, 4123, 4140, 4141, 4146, 4147, 4149, 4155, 4156, 4158, 4160, 4164, 4170, 4332.

Not for Reproduction

REF. NO.	PART NO.	DESCRIPTION
850	100106	Sealant-Liquid (Rocker Cover Gasket and Breather Gasket)
851	692424	Terminal-Spark Plug
864	796002	Adapter-Muffler (Length 2.25 Inches)
868	690968	Seal-Valve
877	393456	Wire/Connector-Alternator (Dual Circuit)
877A	393814	Wire/Connector-Alternator (DC Only)
877B	393537	Wire/Connector-Alternator (Tri Circuit)
877C	399916	Wire/Connector-Alternator (10/16 Amp. Regulated)
877D	790544	Harness-Wiring
878	398661	Harness-Alternator (Dual Circuit)
878A	691955	Harness-Alternator (5/9 Amp Regulated Or Tri Circuit)
883	692236	Gasket-Exhaust
914	691108	Screw (Rocker Cover)
918	791851	Hose-Vacuum (Molded)
943	690589	Seal-O Ring (Oil Pump Cover)
947	699915	Solenoid-Fuel
949A	799358	Guard-Debris Screen
950	691657	Screw-Float Bowl
951	793386	Kit-Choke Shaft (Manual Choke)
957	799719	Cap-Fuel Tank (Carbon In Cap) Used on Type No(s). 0001, 0005, 0177, 0178, 0179, 0182, 0186, 0189, 0190, 0192, 0193, 4117, 4120, 4140, 4141, 4146, 4147, 4149, 4156, 4164, 4170.
957A	795027	Cap-Fuel Tank (Standard)
958	698183	Valve-Fuel Shut Off (Plastic)
964	799159	Cap-Connector (EVAP)
965	499613	Cover-Oil Pump
967	697292	Filter-Pre Cleaner
968	697420	Cover-Air Cleaner (Black-Compatible With Panel Style Filter)
968B	591646	Cover-Air Cleaner (Black-Compatible With Canister Style Filter)
972	799111	Tank-Fuel (Fluorinated) Used on Type No(s). 0001, 0005, 0177, 0178, 0179, 0182, 0186, 0189, 0190, 0192, 0193, 4117, 4120, 4140, 4141, 4146, 4147, 4149, 4156, 4164, 4170. ------ Note ------ 792168 Tank-Fuel (Standard)
975	698783	Bowl-Float (Nikki)
975A	699502	Bowl-Float (Nikki)
975C	495933	Bowl-Float (Walbro)
977	690192	Gasket Set-Carburetor (Walbro)
987	691326	Seal-Throttle Shaft (Walbro)
987A	698777	Seal-Throttle Shaft (Nikki)
994	794945	Spark-Arrestor
1005	796082	Fan-Flywheel (Used After Code Date 07040800).
1005A	796200	Fan-Flywheel (Used Before Code Date 07040900).
1005B		Fan-Flywheel (No Longer Available) (See Reference1005A For Service Flywheel Fan).
1017	796981	Screen-Oil Pump Used on Type No(s). 0116, 0121, 0125, 0131, 0160.
1022	272475S	Gasket-Rocker Cover (Used Before Code Date 07091000). (After Date Code Use Liquid Sealant Reference 850)
1023	797421	Cover-Rocker
1024A	794644	Pump-Oil Used on Type No(s). 0116, 0121, 0125, 0131, 0160.
1026	794573	Rod-Push (Exhaust) ------ Note ------ 697394 Rod-Push (Intake)
1027	492932S	Filter-Oil (Standard)
1029	691751	Arm-Rocker
1034	690822	Guide-Push Rod
1036		Label-Emissions (Available From A Briggs & Stratton Authorized Dealer)
1036A		Label-Emissions
1040	698368	Plate-Trim (Black)
1040A	697381	Plate-Trim (Black) Used on Type No(s). 0604, 0948, 2507, 3604.
1044	698139	Screw (Flywheel)
1051	691265	Ring-Retaining
1054	280275	Tie-Cable
1058	276344	Operator's Manual
1059	698516	Kit-Screw/Washer
1070	791680	Screw (Flywheel Fan) (Used Before Code Date 07040900).
1070A	690363	Screw (Flywheel Fan) (Used Before Code Date 08061900 and After Code Date 07040800).

Not for Reproduction

215800

REF. NO.	PART NO.	DESCRIPTION
1090	**691293**	Retainer-Brush
1091	**691333**	Cap-Limiter
1095	**796189**	Gasket Set-Valve
1119	**691183**	Screw (Alternator)
1127	**695407**	Screw (Float Bowl)
1136	**792629**	Screw (Control Bracket)
1139	**796449**	Washer
1146	**793380**	Screw (Choke Shaft)(Manual Choke)
1263	**697124**	Reed-Breather
1264	**697104**	Screw (Breather Reed)
1266	**691917**	Seal-O Ring (Intake Elbow)
1266A	**697123**	Seal-O Ring (Intake Elbow)
1267	**697419**	Latch-Blower Housing (Black)
1270	**793243**	Plug-AVS Counterweight (Used After Code Date 06081300).
		------ Note ------
	697156	Plug-AVS Counterweight (Used Before Code Date 06081400).
1319	**794467**	Label-Warning
1319A	**797669**	Label-Warning
1448	**690260**	Washer (Armature)

Not for Reproduction

Not for
Reproduction

Not for
Reproduction