Parts Manual

Mfg. No: 127702-0637-01

© Copyright 2017 Briggs and Stratton. All Rights reserved

20-Jun-2017

Model Components

Page

Air Cleaner, Exhaust System. 4
Alternator, Electric Starter, Electrical, Flywheel Brake, Ignition. 6
Blower Housing/Shrouds, Flywheel, Rewind Starter. 10
Camshaft, Crankshaft, Cylinder Group, Engine Sump, Lubrication, Piston Group, Valves. 12
Carburetor. 22
Controls, Fuel Supply, Governor Spring. 26

Not For Reproduction

© Copyright 2017 Briggs and Stratton. All Rights reserved

Mfg. No: 127702-0637-01

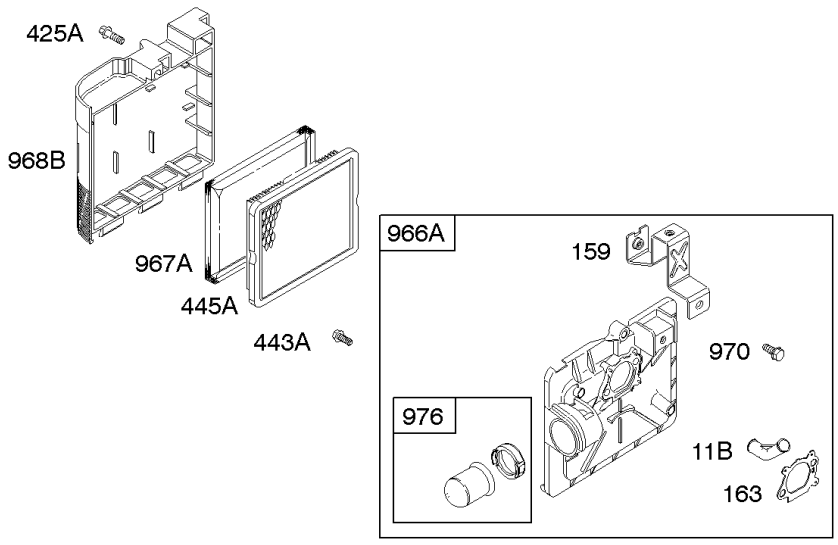

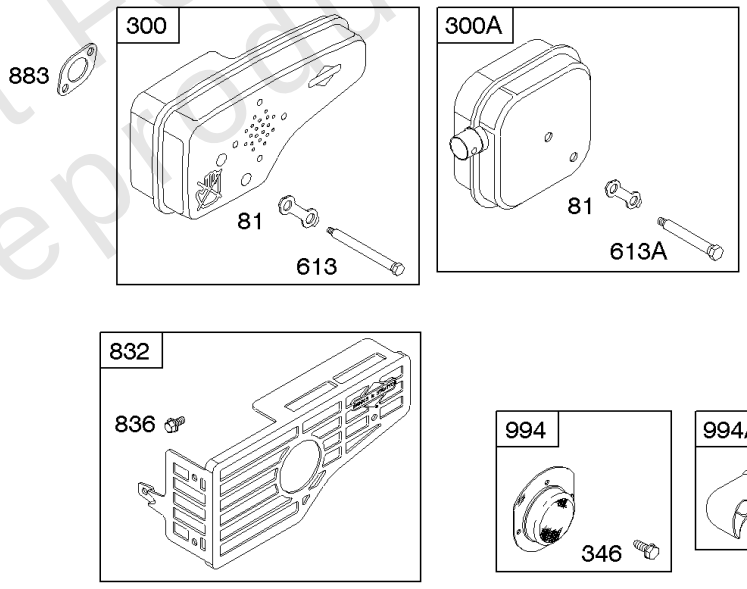

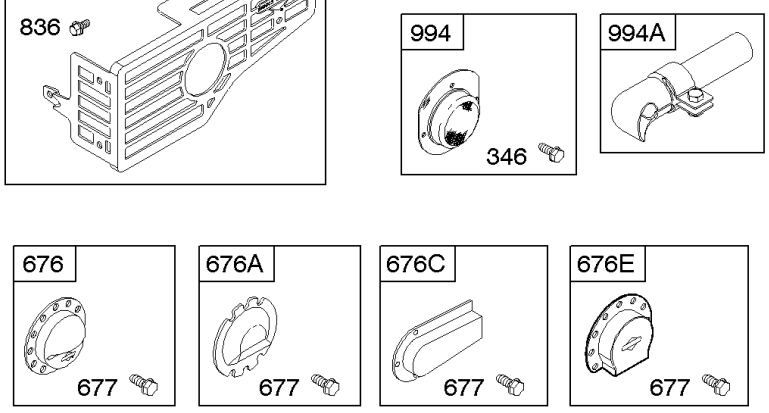

Not For Reproduction

© Copyright 2017 Briggs and Stratton. All Rights reserved

Air Cleaner, Exhaust System

REF NO	PART NO	QTY	DESCRIPTION
11B	691923		Tube-Breather
81	691740		Lock-Muffler Screw
159	691753		Bracket-Air Cleaner Primer
163	272653S		Gasket-Air Cleaner
300	496106S		Muffler -(Tuned)
300A	494343S		Muffler -(Square Lo Tone)
346	690661		Screw -(Spark Arrestor)
425A	690670		Screw (Air Cleaner Cover) -(Air Cleaner Cover)
443A	692523		Screw (Air Cleaner Primer Base) -(Air Cleaner Primer Base)
445A	491588S		Filter-Air Cleaner Cartridge
613	691340		Screw (Exhaust Muffler) -(Muffler)
613A	691653		Screw (Exhaust Muffler) -(Muffler)
676	396548		Deflector-Muffler -(Louvered)
676A	393756		Deflector-Muff (Side Outlet) -(Side Out)(Shallow)
676C	493871		Deflector-Muffler -(Side Out)(Extended)(Horseshoe)
676E	393760		Deflector-Muff (Side Outlet) -(Side Out)(Deep)
677	690661		Screw -(Muffler Deflector)
832	499034		Guard-Muffler -Used Before Code Date 11070100
832	590486		Guard-Muffler -Used After Code Date 11063000
836	690664		Screw (Muffler Guard) -(Muffler Guard)
883	691881		Gasket-Exhaust
966A	496116		Base-Air Cleaner Primer
967A	493537S		Filter-Air Cleaner Foam
968B	692298		Cover-Air Cleaner
970	691669		Screw (Air Cleaner Primer Bracket) -(Air Cleaner Primer Bracket)
976	694395		Primer-Carburetor
994	398067		Arrestor-Spark
994A	692957		Deflector-Muffler

Not For Reproduction

© Copyright 2017 Briggs and Stratton. All Rights reserved

Alternator, Electric Starter, Electrical, Flywheel Brake, Ignition

Mfg. No: 127702-0637-01

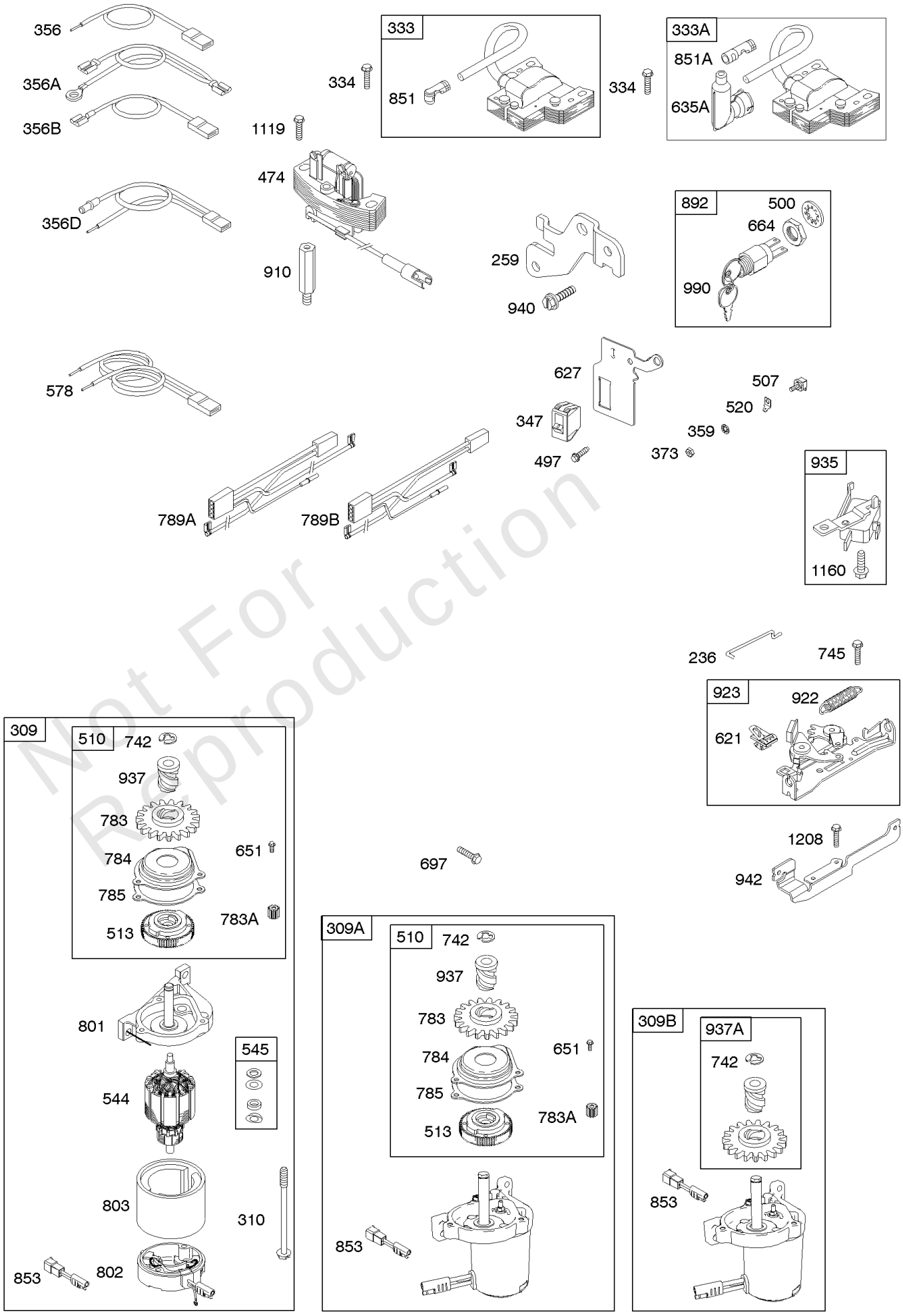

Not For Reproduction

Alternator, Electric Starter, Electrical, Flywheel Brake, Ignition

REF NO	PART NO	QTY	DESCRIPTION
236	691826		Link-Lockout
259	691223		Bracket-Casing Clamp
309	695550		Motor-Starter -Used Before Code Date 07052900
309A	795092		Motor-Starter -Used After Code Date 07052800 -Used Before Code Date 10112800
309B	799045		Motor-Starter -Used After Code Date 10112700
310	692327		Screw (Starter Motor) -(Starter Motor)
333	802574		Armature-Magneto
333A	792640		Armature-Magneto -(Screw On Spark Plug Boot)
333A	793353		Armature-Magneto -(Snap In Spark Plug Boot)
334	691061		SCREW -(Magneto Armature)
347	691396		Switch-Rocker
356	692390		Wire-Stop
356A	690650		Wire-Stop
356B	693010		Wire-Stop
356D	496381		Wire-Stop
359	691077		Washer (Ground Terminal) -(Ground Terminal)
373	691612		Nut (Ground Terminal) -(Ground Terminal)
474	691991		Alternator
497	690664		Screw (Muffler Guard) -(Stopswitch Bracket)
500	691086		Washer -(Key Switch)
507	691972		Insulator
510	795093		Drive-Starter
513	692358		Clutch-Drive
520	691084		Terminal-Ground
544	690786		Armature-Starter
545	492919		Washer Set (Starter Motor) -(Starter Motor)
578	398153		Wire Assembly
621	692310		Switch-Stop
627	692872		Bracket-Stopswitch
635A	793351		Shield-Spark Plug -(Snap In Style)
635A	792597		Boot-Spark Plug -(Screw On Style)
651	691660		Screw -(Starter Gear Cover)
664	691087		Nut -(Key Switch)
697	691127		SCREW -(Drive Cap)
742	93941		Kit-Pump/choke Diaphragm
745	691648		Screw (Muffler Adapter) -(Brake)
783	691918		Gear-Pinion
783A	691269		Gear-Pinion

Not For Reproduction

© Copyright 2017 Briggs and Stratton. All Rights reserved

Alternator, Electric Starter, Electrical, Flywheel Brake, Ignition

Mfg. No: 127702-0637-01

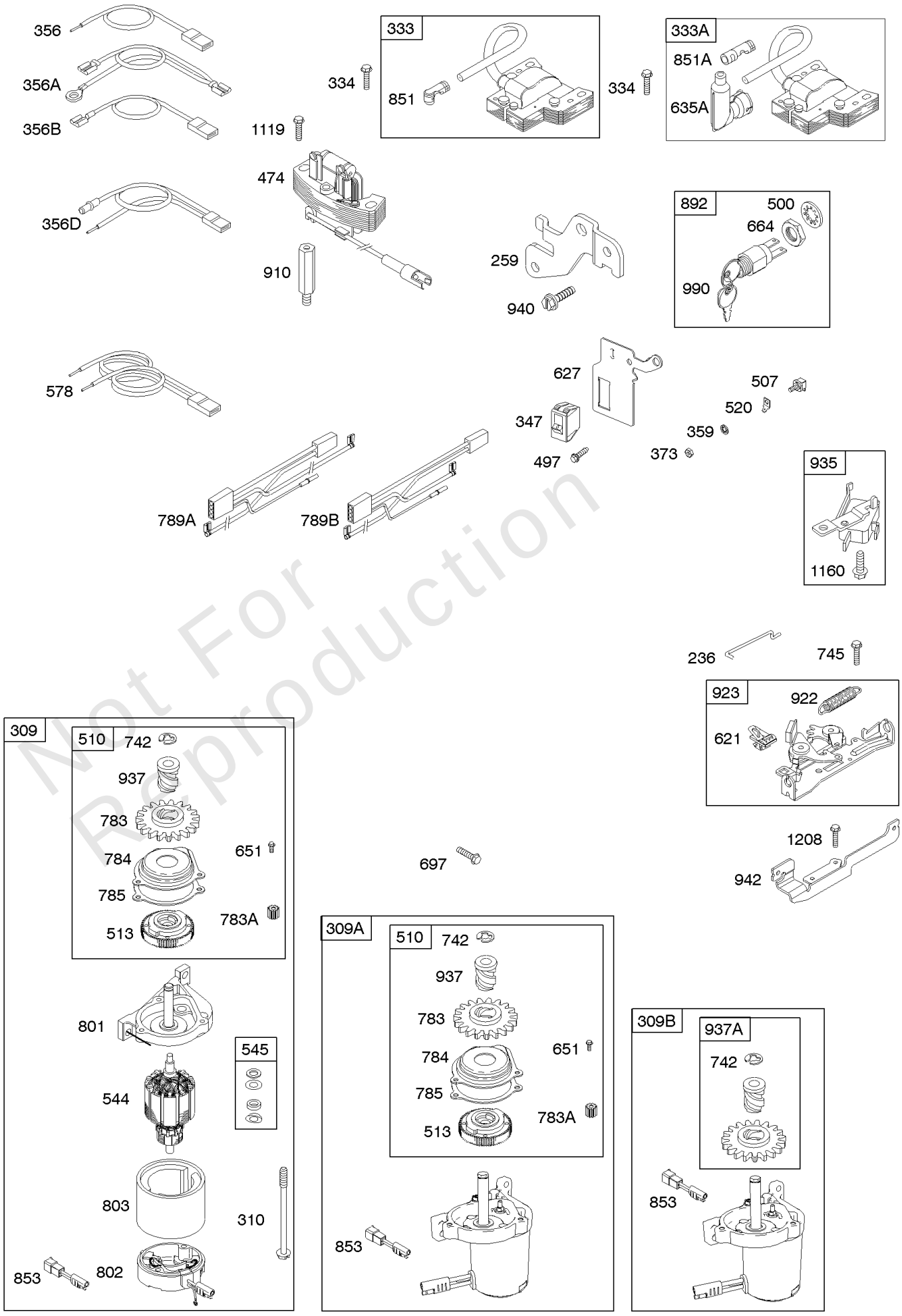

Not For Reproduction

© Copyright 2017 Briggs and Stratton. All Rights reserved

REF NO	PART NO	QTY	DESCRIPTION
784	795095		Cover-Starter Gear
785	692352		Gasket-Starter Cover
789A	691372		Harness-Wiring -Used Before Code Date 00040700
789B	696547		Harness-Wiring -Used After Code Date 00040600
801	690782		Cap-Drive
802	695267		Cap-End -Used After Code Date 00040600
802	695975		Housing-Starter -Used Before Code Date 00040700
803	695975		Housing-Starter -Used Before Code Date 00040700
803	695266		Housing-Starter -Used After Code Date 00040600
851	493880S		Terminal-Spark Plug
851A	692424		Terminal-Spark Plug
853	695268		Adapter-Wire
892	690646		Switch-Key
910	691094		Stud (Alternator) -(Alternator)
922	691831		Spring-Brake
923	796387		Brake -Used After Code Date 08043000
935	499421		Switch-Interlock -Used Before Code Date 08050100
937	691325		Spline-Starter
937A	799420		Spline-Starter
940	691044		Screw (Oil Fill Bracket) -(Casing Clamp Bracket)
942	690455		Bracket-Brake
990	691959		Key Set
1119	691648		Screw (Muffler Adapter) -(Alternator)
1160	690345		Screw (Breather Passage Cover) -(Interlock Switch)
1208	690345		Screw (Breather Passage Cover) -(Brake Bracket)

Not For Reproduction

© Copyright 2017 Briggs and Stratton. All Rights reserved

Blower Housing/Shrouds, Flywheel, Rewind Starter

Mfg. No: 127702-0637-01

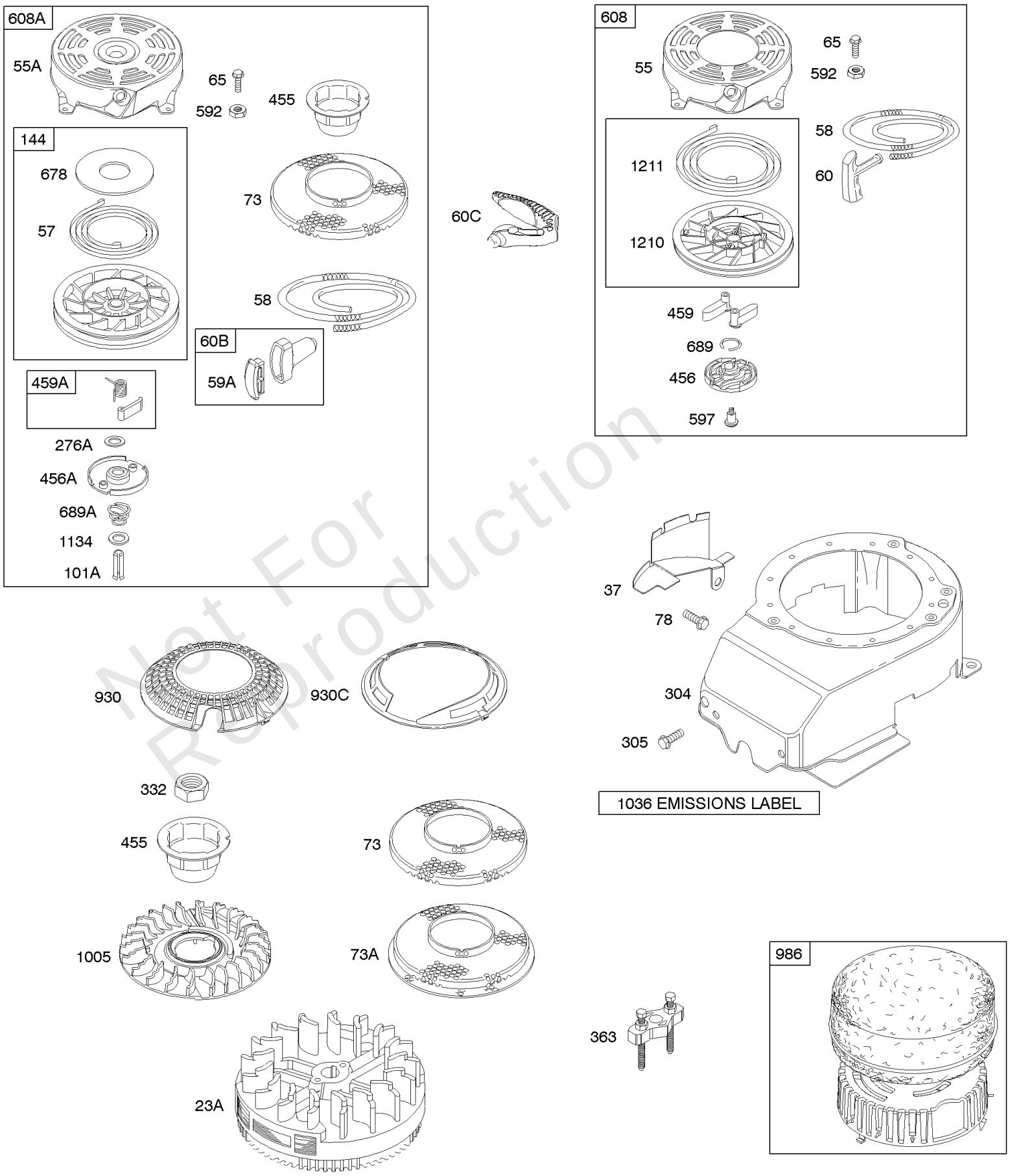

Not For Reproduction

© Copyright 2017 Briggs and Stratton. All Rights reserved

Blower Housing/Shrouds, Flywheel, Rewind Starter

REF NO	PART NO	QTY	DESCRIPTION
23A	691987		Flywheel
37	694086		Guard-Flywheel
55	691421		Housing-Rewind Starter
55A	492831		Housing-Rewind Starter
57	491889		Spring-Rewind Starter
58	697316		Rope-Starter -(Cut To Required Length)
59A	396892		Insert-Starter Rope
60	281434S		Grip-Starter Rope
60B	393152		Insert-Starter Handle
60C	799716		Grip-Starter Rope
65	690837		Screw (Rewind Starter) -(Rewind Starter)
73	691222		Screen-Rotating
73A	224527		Screen-Rotating
78	691108		SCREW -(Flywheel Guard)
101A	262626		Pin-Starter -(NO LONGER AVAILABLE)
144	493824		Pulley/Spring Assembly (Pulley)
276A	280973		Washer (Starter Clutch)
304	795071		Housing-Blower
305	691108		SCREW -(Blower Housing)
332	690662		Nut -(Flywheel)
363	19069		Puller-Flywheel (Optional Accessory)
455	791960		Cup-Flywheel
456	692299		Plate-Pawl Friction
456A	224321		Plate-Pawl Friction
459	281505S		Pawl-Ratchet
459A	492833		Spring-Ratchet
592	690800		Nut (Rewind Starter) -(Rewind Starter)
597	691696		Screw (Pawl Friction Plate) -(Pawl Friction Plate)
608	497680		Starter-Rewind
608A	497598		Starter-Rewind (Ref. No. 455)
678	224278		Spacer-Rewind
689	691855		Spring-Friction
689A	262625		Spring-Friction
930	691919		Guard-Rewind -(Round)
930C	690598		Guard-Rewind -(Trim Ring)
986	693514		Filter-Debris Foam
1005	691346		Fan-Flywheel
1036	-		Label-Emissions -(Available From A Briggs & Stratton Authorized Dealer)
1134	224322		Washer (Pawl Friction Plate) -(Pawl Friction Plate)
1210	498144		Pulley/Spring Assembly (Spring) -(Pulley) (Pulley)
1211	498144		Pulley/Spring Assembly (Spring) -(Spring) (Spring)

Not For Reproduction

© Copyright 2017 Briggs and Stratton. All Rights reserved

Camshaft, Crankshaft, Cylinder Group, Engine Sump, Lubrication, Piston Group, Valves

Mfg. No: 127702-0637-01

1319 WARNING LABEL	1058 OPERATOR'S MANUAL	1330 REPAIR MANUAL	1019 LABEL KIT
REQUIRED *when replacing parts with warning labels affixed.*			

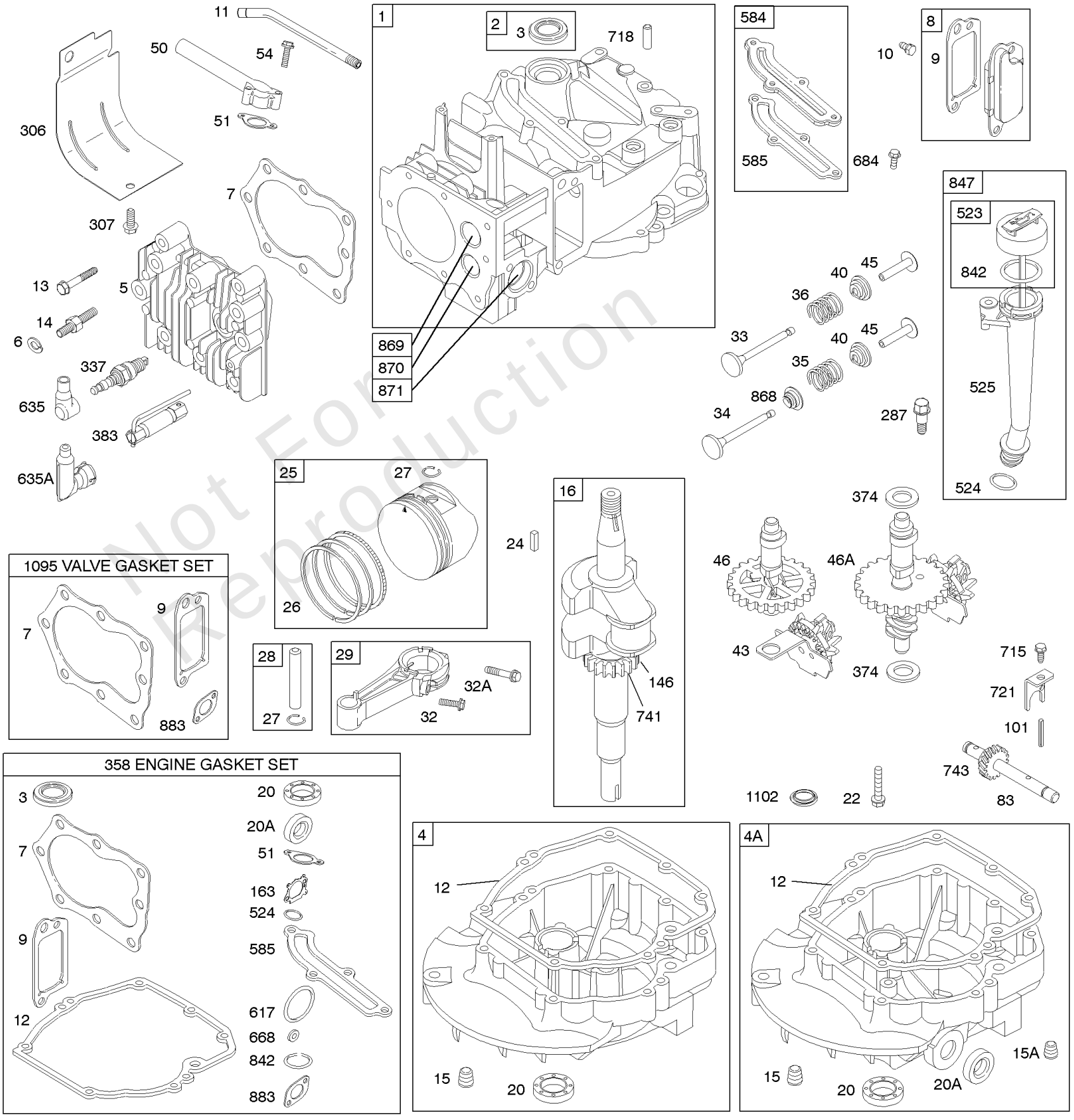

Not For Reproduction

© Copyright 2017 Briggs and Stratton. All Rights reserved

REF NO	PART NO	QTY	DESCRIPTION
1	590401		Cylinder Assembly -Used After Code Date 11063000
1	697322		Cylinder Assembly -Used Before Code Date 11070100
2	399269		Kit-Bushing/seal (Magneto Side) -(Magneto Side)
3	299819S		Seal-Oil -(Magneto Side)
4	493279		Sump-Engine
4A	493365		Sump-Engine (Right Angle Drive)
5	590411		Head-Cylinder -Used After Code Date 11063000
5	691160		Head-Cylinder -Used Before Code Date 11070100
7	692249		Gasket-Cylinder Head -Used Before Code Date 11070100
7	799875		Gasket-Cylinder Head -Used After Code Date 11063000
8	590395		Breather Assembly -Used After Code Date 11063000
8	695250		Breather Assembly -Used Before Code Date 11070100
9	699472		Gasket-Breather -Used After Code Date 11063000
9	699833		Gasket-Breather -Used Before Code Date 11070100
10	691125		Screw (Breather Assembly) -(Breather Assembly)
11	691781		Tube-Breather
12	692232		Gasket-Crankcase
13	690912		Screw (Cylinder Head) -(Cylinder Head) -Used Before Code Date 11070100
13	590422		Screw -(Cylinder Head) -Used After Code Date 11063000
15	691680		Plug-Oil Drain (Hex Head) -(Square Socket)
15A	691093		Plug-Oil Drain -(Hex Socket)
16	593916		Crankshaft -Used Before Code Date 97011300
16	691451		Crankshaft -Used After Code Date 97011200
20	399781S		Seal-Oil -(PTO Side)
20A	691952		Seal-Oil (PTO Side) -(PTO Side) (Auxiliary PTO)
22	691092		Screw (Crankcase Cover Sump) -(Crankcase Cover/Sump)
24	222698S		KEY, Flywheel
25	493387		Piston Assembly (.030" O.S.) -(.030" Oversize) -Used Before Code Date 97011300
25	590404		Piston Assembly -(Standard) -Used After Code Date 11063000
25	590405		Piston Assembly -(.020" Oversize) -Used After Code Date 11063000

Not For Reproduction

© Copyright 2017 Briggs and Stratton. All Rights reserved

Camshaft, Crankshaft, Cylinder Group, Engine Sump, Lubrication, Piston Group, Valves

Mfg. No: 127702-0637-01

1319 WARNING LABEL	1058 OPERATOR'S MANUAL	1330 REPAIR MANUAL	1019 LABEL KIT
REQUIRED *when replacing parts with warning labels affixed.*			

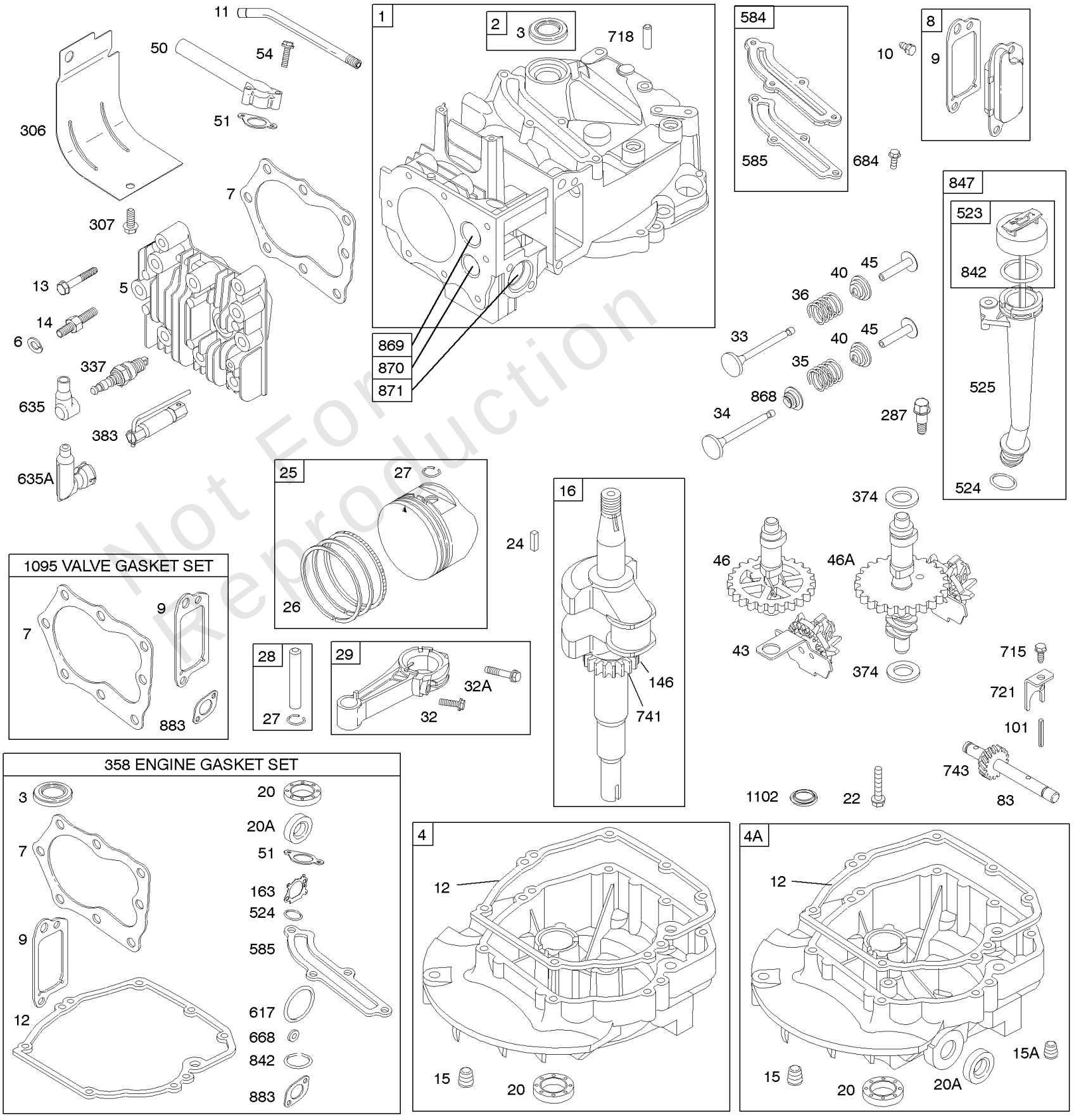

Not For Reproduction

© Copyright 2017 Briggs and Stratton. All Rights reserved

REF NO	PART NO	QTY	DESCRIPTION
25	791097		Piston Assembly -(Standard) -Used After Code Date 97011200 -Used Before Code Date 07090400
25	791326		Piston Assembly -(.020" Oversize) -Used After Code Date 97011200 -Used Before Code Date 07090400
25	795429		Piston Assembly-STD -(Standard) -Used After Code Date 07090300 -Used Before Code Date 09041700
25	795430		Piston Assembly -(.020" Oversize) -Used After Code Date 07070300 -Used Before Code Date 09041700
25	797302		Piston Assembly -(Standard) -Used After Code Date 09041600 -Used Before Code Date 11070100
25	797303		Piston Assembly -(.020" Oversize) -Used After Code Date 09041600 -Used Before Code Date 11070100
25	493262		Piston Assy-Std (Standard) -(Standard) -Used Before Code Date 97011300
25	493386		Piston Assembly (.020" O.S.) -(.020" Oversize) -Used Before Code Date 97011300
26	493390		Ring Set (.030" O.S.) -(.030" Oversize) -Used Before Code Date 97011300
26	499425		Ring Set (Standard) -(Standard) -Used After Code Date 97011200 -Used Before Code Date 04031500
26	499427		Ring Set (.020" O.S.) -(.020" Oversize) -Used After Code Date 97011200 -Used Before Code Date 04102200
26	590402		Ring Set -(Standard) -Used After Code Date 11063000
26	590403		Ring Set -(.020" Oversize) -Used After Code Date 11063000
26	791098		Ring Set -(Standard) -Used After Code Date 04031400 -Used Before Code Date 07090400
26	791324		Ring Set-STD -(.020" Oversize) -Used After Code Date 04102100 -Used Before Code Date 07090400
26	795431		Ring Set -(Standard) -Used After Code Date 07090300 -Used Before Code Date 09041700
26	795432		Ring Set -(.020" Oversize) -Used After Code Date 07090300 -Used Before Code Date 09041700
26	797304		Ring Set -(Standard) -Used After Code Date 09041600 -Used Before Code Date 11070100

Not For Reproduction

© Copyright 2017 Briggs and Stratton. All Rights reserved

Camshaft, Crankshaft, Cylinder Group, Engine Sump, Lubrication, Piston Group, Valves

Mfg. No: 127702-0637-01

1319 WARNING LABEL	1058 OPERATOR'S MANUAL	1330 REPAIR MANUAL	1019 LABEL KIT
REQUIRED *when replacing parts with warning labels affixed.*			

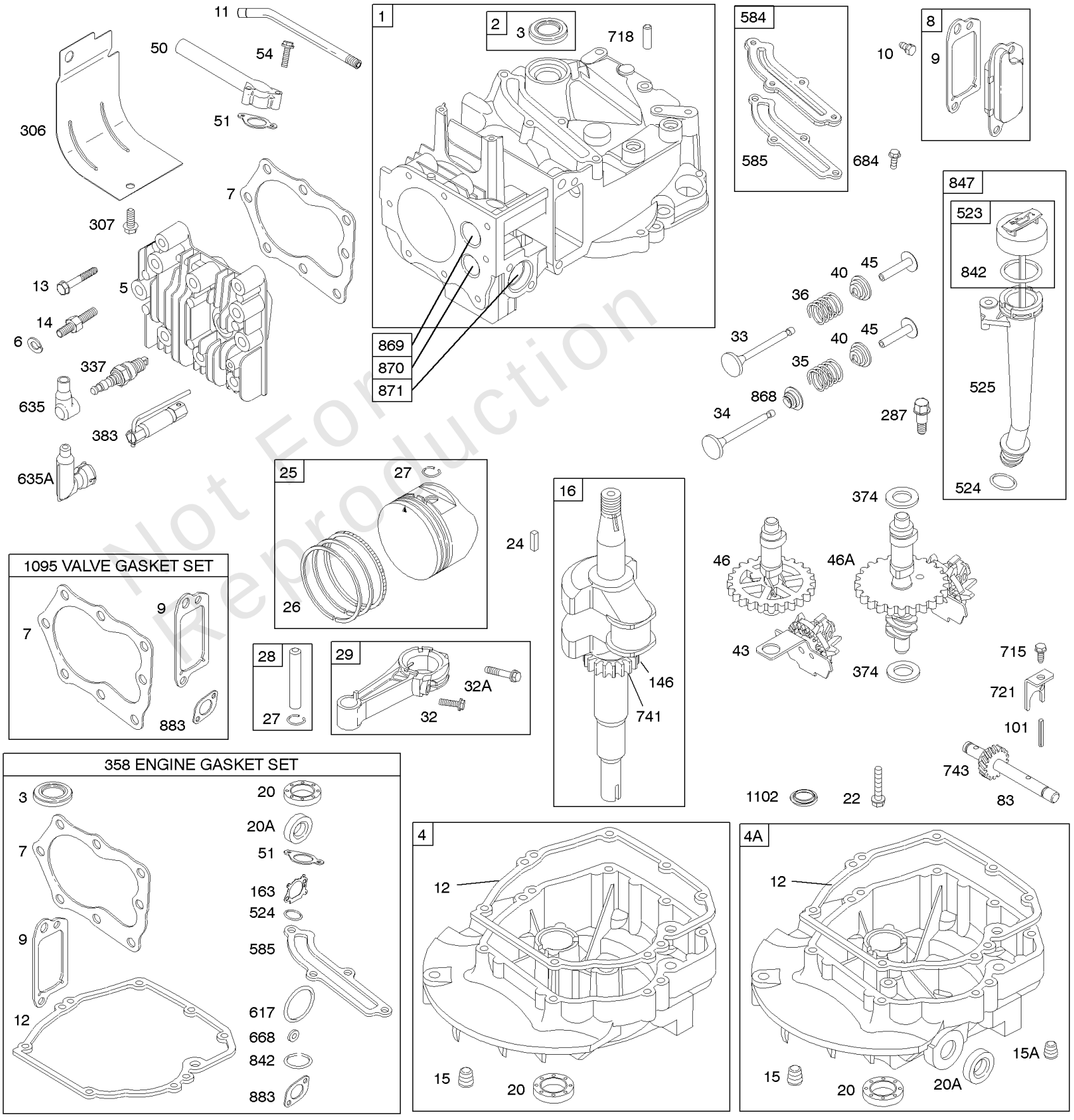

Not For Reproduction

© Copyright 2017 Briggs and Stratton. All Rights reserved

REF NO	PART NO	QTY	DESCRIPTION
26	797305		Ring Set -(.020" Oversize) -Used After Code Date 09041600 -Used Before Code Date 11070100
26	493261		Ring Set (Standard) -(Standard) -Used Before Code Date 97011300
26	493389		Ring Set (.020" O.S.) -(.020" Oversize) -Used Before Code Date 97011300
27	691866		Lock-Piston Pin -Used After Code Date 97011200 -Used Before Code Date 09041700
27	691588		Lock-Piston Pin -Used Before Code Date 97011300
27	691588		Lock-Piston Pin -Used After Code Date 09041600
28	298909		Pin-Piston -(Standard) -Used Before Code Date 97011300
28	499423		Pin-Piston (Standard) -(Standard) -Used After Code Date 97011200 -Used Before Code Date 09041700
28	298909		Pin-Piston -(Standard) -Used After Code Date 09041600
28	298908		Pin-Piston 005 (.005" O.S.) -(.005" Oversize) -Used Before Code Date 97011300
29	499424		Rod-Connecting (Standard) -(Standard) -Used After Code Date 97011200 -Used Before Code Date 09041700
29	797306		Rod-Connecting -(Standard) -Used After Code Date 09041600
29	490566		Rod-Connecting (Standard) -(Standard) -Used Before Code Date 97011300
32	691664		Screw -(Connecting Rod)
32A	695759		Screw (Connecting Rod) -(Connecting Rod) -Used After Code Date 00042200
33	262651S		Valve-Exhaust -Used Before Code Date 11070100
33	590394		Valve-Exhaust -Used After Code Date 11063000
34	590393		Valve-Intake -Used After Code Date 11063000
34	262652S		Valve-Intake -Used Before Code Date 11070100
35	691270		Spring-Valve (Exhaust) -(Intake)
36	691270		Spring-Valve (Exhaust) -(Exhaust)
40	692194		Retainer-Valve
43	691997		Slinger-Governor/Oil
45	690548		Tappet-Valve
46	492830		Camshaft -Used Before Code Date 96060300

Not For Reproduction

© Copyright 2017 Briggs and Stratton. All Rights reserved

Camshaft, Crankshaft, Cylinder Group, Engine Sump, Lubrication, Piston Group, Valves

Mfg. No: 127702-0637-01

1319 WARNING LABEL	1058 OPERATOR'S MANUAL	1330 REPAIR MANUAL	1019 LABEL KIT
REQUIRED *when replacing parts with warning labels affixed.*			

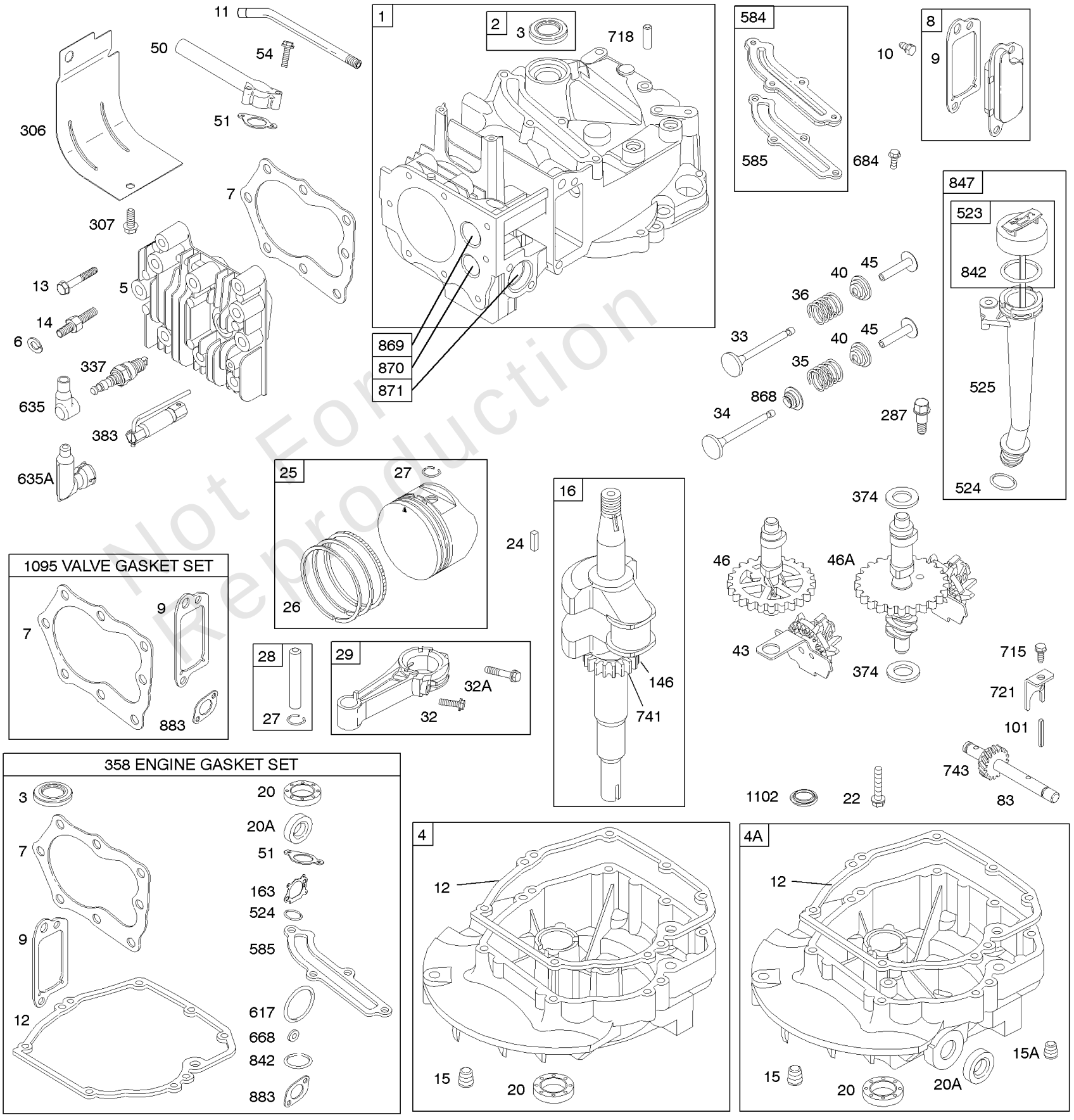

Not For Reproduction

© Copyright 2017 Briggs and Stratton. All Rights reserved

REF NO	PART NO	QTY	DESCRIPTION
46	691449		Camshaft -Used After Code Date 96060200
50	497465		Manifold-Intake
51	272199S		Gasket-Intake
54	691650		Screw (Intake Manifold) -(Intake Manifold)
83	691778		Shaft-Auxiliary Drive
101	691623		Pin-Shaft
146	690979		KEY, Woodruff
163	272653S		Gasket-Air Cleaner
287	690940		Screw (Dipstick Tube) -(Dipstick Tube)
306	690450		Shield-Cylinder
307	690345		Screw (Breather Passage Cover) -(Cylinder Shield)
337	802592S		Plug-Spark (Resistor) -(Resistor) -Used Before Code Date 11070100
337	799876		Plug-Spark -Used After Code Date 11063000
337	697451		Plug-Spark -(EMS) -Used Before Code Date 11070100
358	794307		Gasket Set-Engine
374	691074		Washer (Camshaft) -(Camshaft)
383	89838S		Wrench-Spark Plug
523	499621		Dipstick
524	692296		Seal-Dipstick Tube
525	495265		Tube-Oil Filler
584	697734		Cover-Breather Passage
585	691879		Gasket-Breather Passage (Intake Manifold)
617	270344S		Seal-O Ring -(Intake Manifold)
635	66538S		BOOT, Spark Plug
635A	793351		Shield-Spark Plug -(Snap In Style)
635A	792597		Boot-Spark Plug -(Screw On Style)
668	493823		Spacer (Includes 2) (Sold In Kit Only) -(Includes 2)
684	690345		Screw (Breather Passage Cover) -(Breather Passage Cover)
715	691147		Screw -(Stop Shaft)
718	690959		PIN, Locating
721	690449		Stop-Shaft
741	797521		Gear-Timing -(Metal) -Used After Code Date 08021700
741	691830		Gear-Timing -(Uses Woodruff Key)
741	790345		Gear-Timing -(Use Without Woodruff Key) -Used Before Code Date 07100100
741	794388		Gear-Timing -(Use Without Woodruff Key) -Used After Code Date 07093000 -Used Before Code Date 08021800

Not For Reproduction

© Copyright 2017 Briggs and Stratton. All Rights reserved

Camshaft, Crankshaft, Cylinder Group, Engine Sump, Lubrication, Piston Group, Valves

Mfg. No: 127702-0637-01

1319 WARNING LABEL	1058 OPERATOR'S MANUAL	1330 REPAIR MANUAL	1019 LABEL KIT
REQUIRED *when replacing parts with warning labels affixed.*			

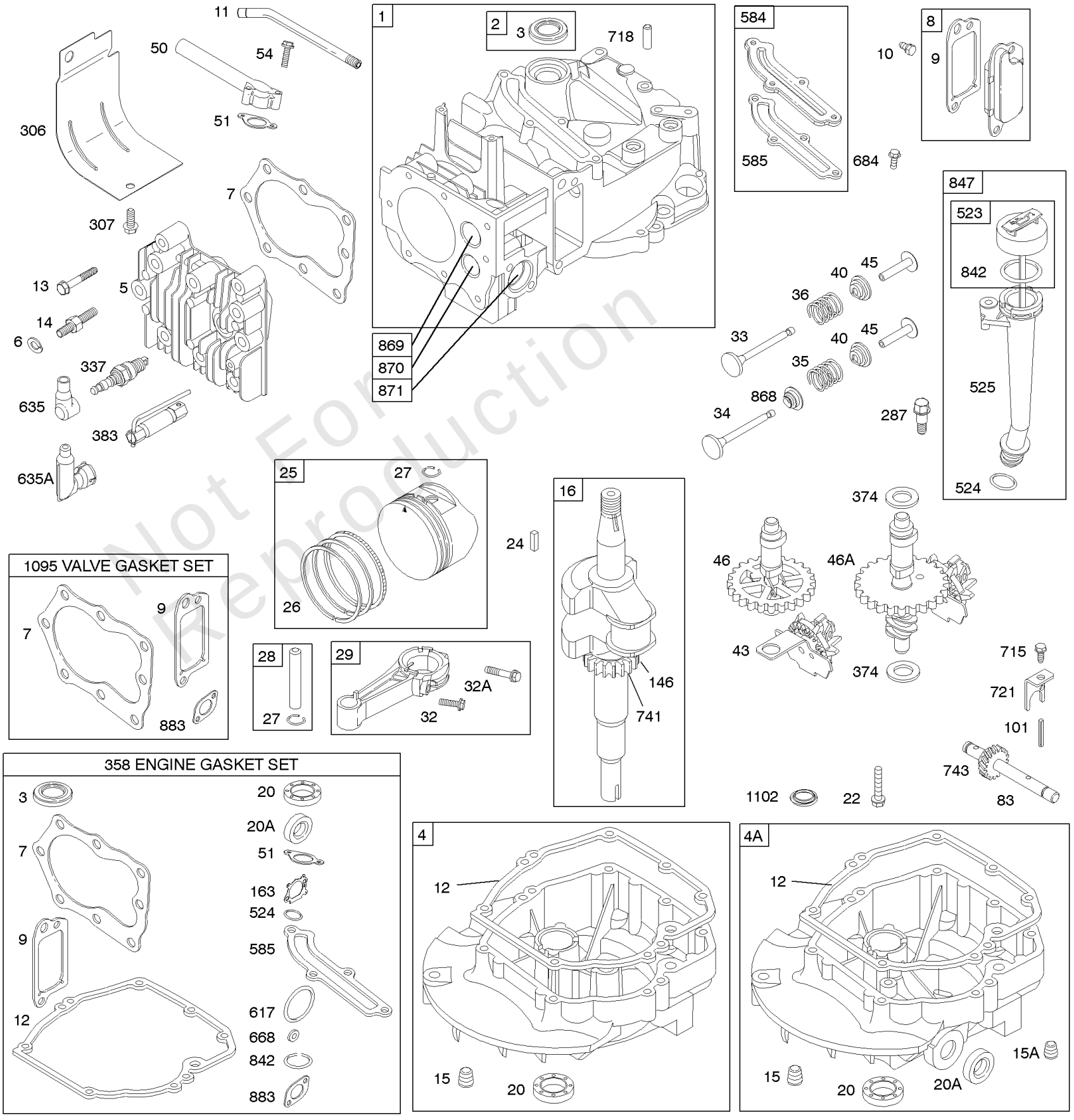

Not For Reproduction

© Copyright 2017 Briggs and Stratton. All Rights reserved

REF NO	PART NO	QTY	DESCRIPTION
741	795755		Gear-Timing -(Plastic) -Used After Code Date 08021700
842	691031		SEAL, O-Ring -(Dipstick Tube)
847	692047		Dipstick/Tube Assembly
868	590410		Seal-Valve -Used After Code Date 11063000
868	697338		Seal-Valve -Used Before Code Date 11070100
869	691155		Seat-Valve (Intake) -(Intake)
870	690380		Seat-Valve (Exhaust) -(Exhaust)
871	63709		Bushing-Valve Guide (Intake Valve) -(Intake) -Used Before Code Date 11070100
871	262001		Bushing-Valve Guide (Exhaust Valve) -(Exhaust) -Used Before Code Date 11070100
871	590409		Bushing-Valve Guide -Used After Code Date 11063000
883	691881		Gasket-Exhaust
1019	494256		Kit-Label
1058	277039		Operator's Manual
1095	498528		Gasket Set-Valve Overhaul
1102	691255		Pilot-Guide
1319	794467		LABEL, Warning
1330	270962		Repair Manual

Not For Reproduction

© Copyright 2017 Briggs and Stratton. All Rights reserved

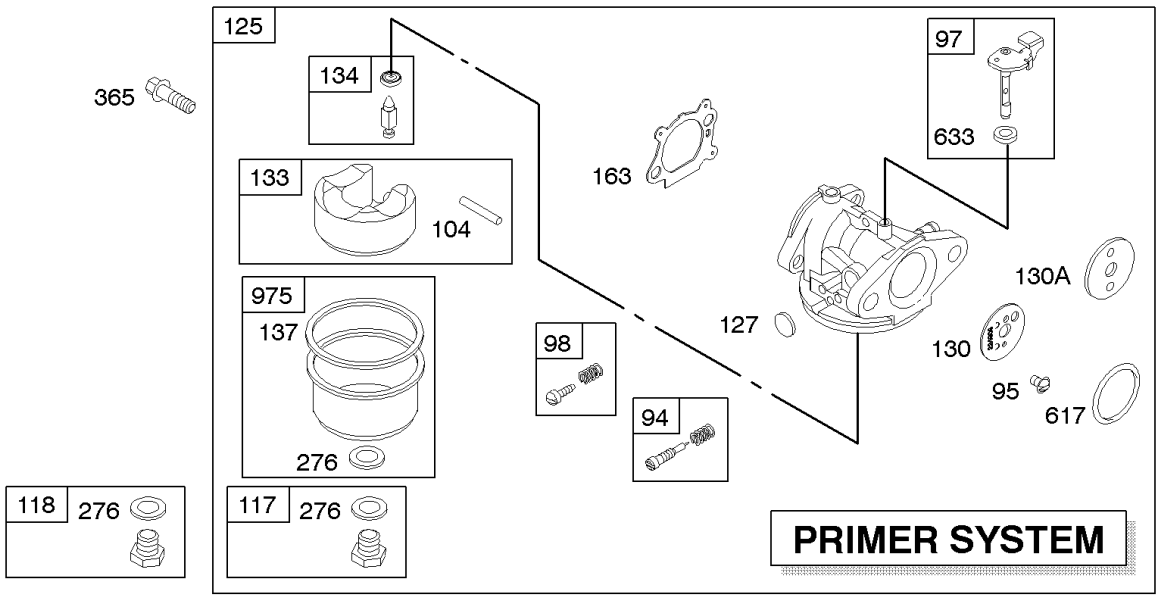

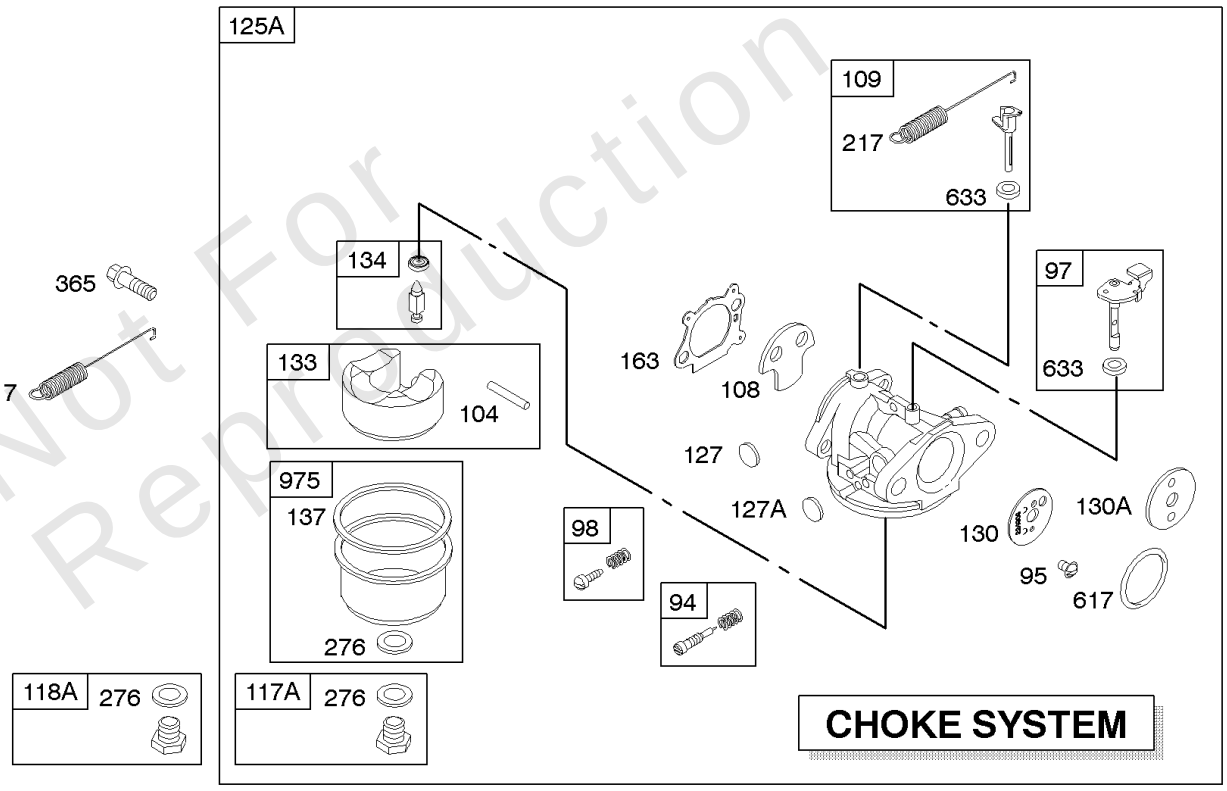

Not For Reproduction

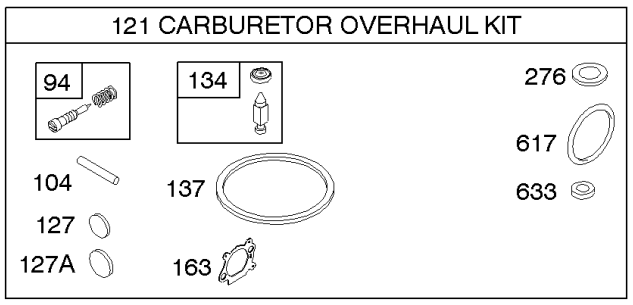

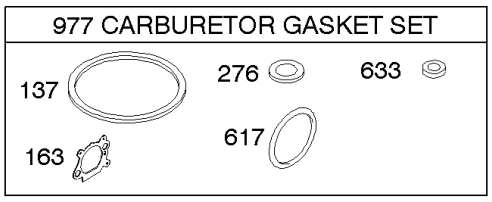

© Copyright 2017 Briggs and Stratton. All Rights reserved

REF NO	PART NO	QTY	DESCRIPTION
94	493765		Kit-Idle Mixture (Used On Carb. I.d. No. M24)
95	691636		Screw (Throttle Valve) -(Throttle Valve)
97	493267		Kit-Throttle Shaft -(Metal)
97	696565		Shaft-Throttle -(Plastic)
98	398185		Screw-Idle Speed (Lmt 26, 27, 28, 31)
104	691242		Pin-Float Hinge
108	691182		Valve-Choke
109	494218		Kit-Choke Shaft
117	494870		Jet-Main (High Altitude) -(Standard) -Used After Code Date 96060200
117	497315		Jet-Main (High Altitude) -(Standard) -Used Before Code Date 95103000
117	497466		Jet-Main (Standard) -(Standard) -Used After Code Date 95102900 -Used Before Code Date 96060300
117A	498977		Jet-Main (High Altitude) -(Standard) -Used After Code Date 96060200
117A	493637		Jet-Main (Standard) -(Standard) -Used Before Code Date 96060300
118	496495		Jet-Main (High Altitude) -(High Altitude) -Used After Code Date 95102900 -Used Before Code Date 96060300
118	497315		Jet-Main (High Altitude) -(High Altitude) -Used After Code Date 96060200
118	497348		Jet-Main (High Altitude) -(High Altitude) -Used Before Code Date 95103000
118A	498981		Jet-Main (High Altitude) -(High Altitude) -Used After Code Date 96060200
118A	496063		Jet-Main (High Altitude) -(High Altitude) -Used Before Code Date 96060300
121	498260		Kit-Carburetor Overhaul
125	498170		Carburetor (Primer System) -Used After Code Date 96060200
125	498254		Carburetor (Primer System) -Used Before Code Date 96060300
125A	498965		Carburetor (Choke System) -Used After Code Date 96060200
125A	494217		Carburetor (Choke System) -Used Before Code Date 96060300
127	694468		Plug-Welch (Bowl Vent)
127A	691739		Plug-Welch
130	691203		Valve-Throttle
130	696564		Valve-Throttle -(Primer System) -Used After Code Date 01040800
130A	691181		Valve-Throttle
133	398187		Float-Carburetor

Not For Reproduction

© Copyright 2017 Briggs and Stratton. All Rights reserved

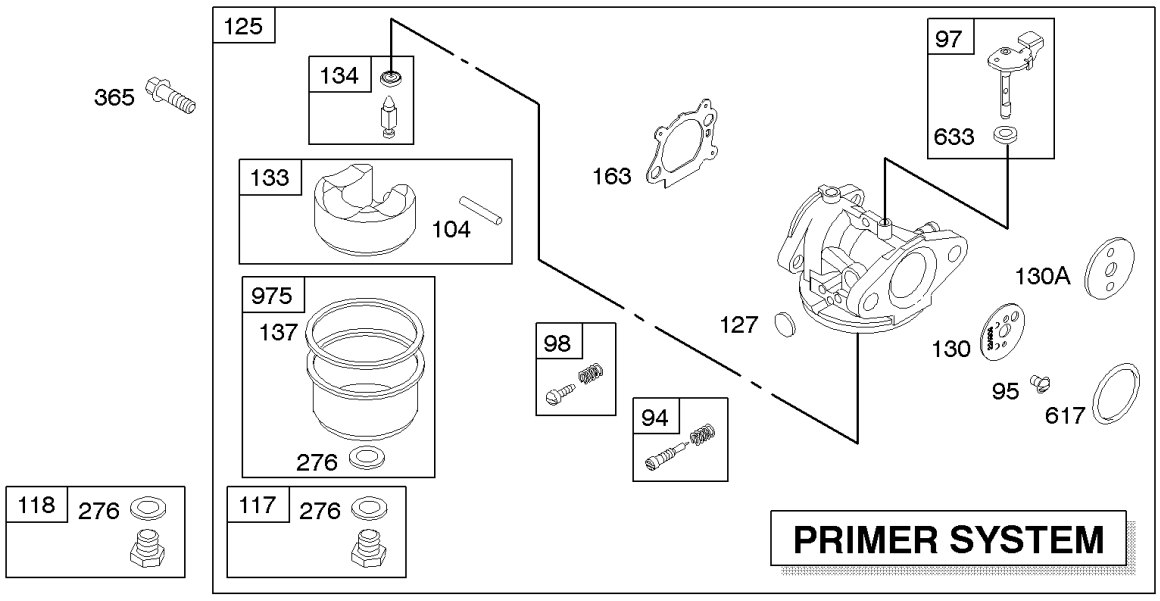

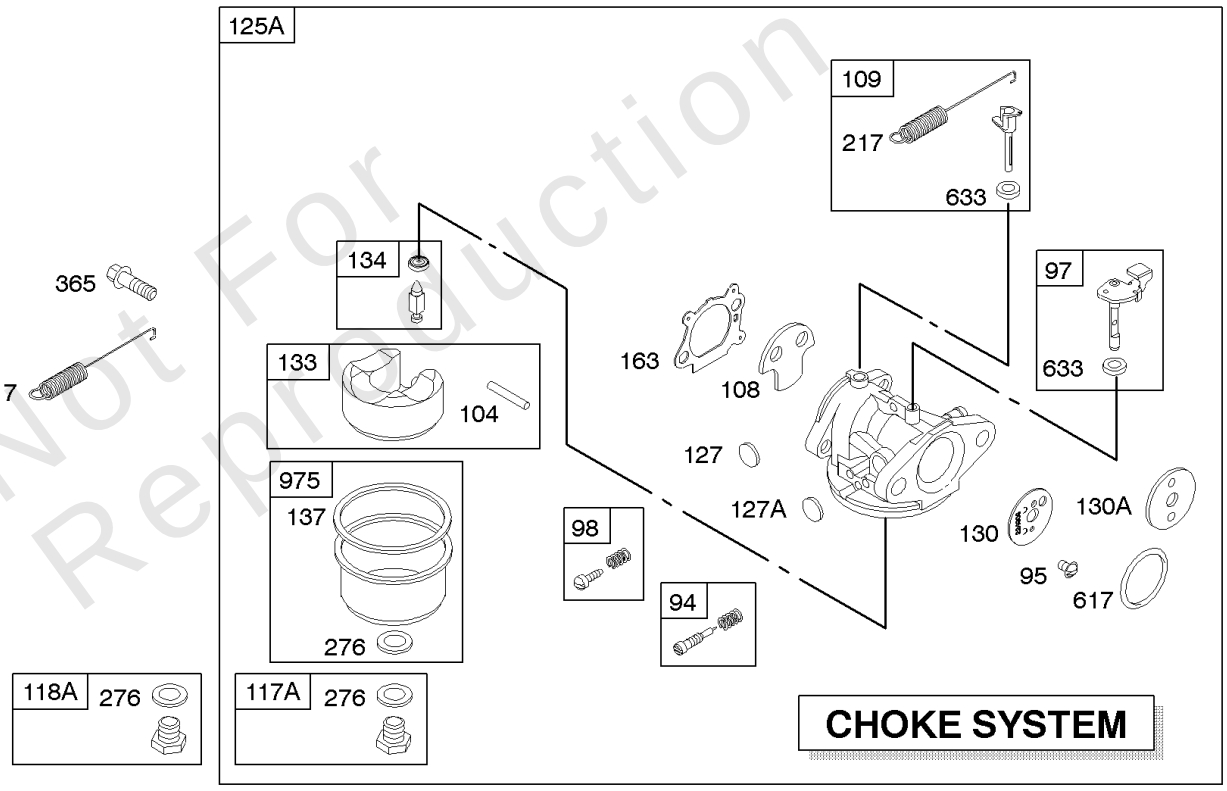

Not For Reproduction

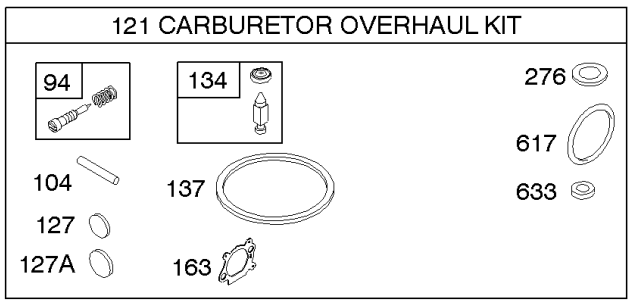

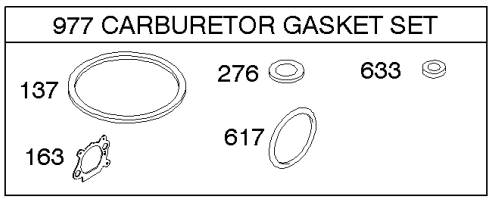

© Copyright 2017 Briggs and Stratton. All Rights reserved

Carburetor

REF NO	PART NO	QTY	DESCRIPTION
134	398188		Kit-Needle/seat (Includes Seat)
137	693981		Gasket-Float Bowl -(1/16" Thick)
137	796610		Gasket-Float Bowl
163	272653S		Gasket-Air Cleaner
217	690354		Spring-Choke Return
276	271716		Washer-Sealing
365	691688		Screw -(Carburetor)
617	270344S		Seal-O Ring -(Intake Manifold)
633	691321		Seal-Dust (Throttle Shaft) -(Throttle Shaft)
975	493640		Bowl-Float
977	498261		Gasket Set-Carburetor

Not For Reproduction

© Copyright 2017 Briggs and Stratton. All Rights reserved

Controls, Fuel Supply, Governor Spring

Mfg. No: 127702-0637-01

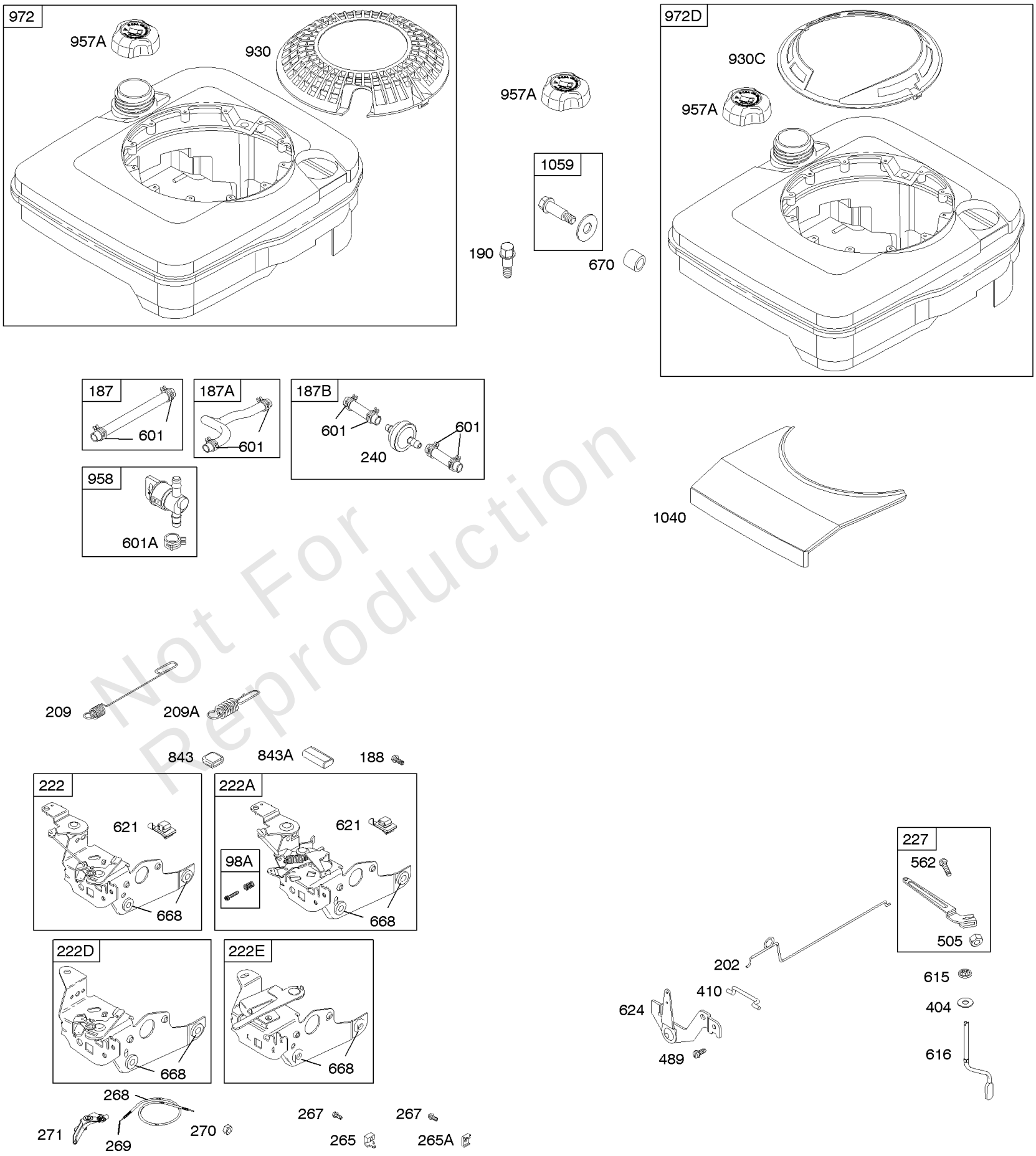

Not For Reproduction

Controls, Fuel Supply, Governor Spring

REF NO	PART NO	QTY	DESCRIPTION
98A	493280		Screw-Speed Adj.
187	791766		LINE, Fuel -(Cut To Required Length)
187A	791873		Line-Fuel -(Molded)
187B	791891		Line-Fuel -(Includes Filter)
188	690877		Screw (Control Bracket) -(Control Bracket)
190	690940		Screw (Dipstick Tube) -(Fuel Tank)
202	691829		Link-Mechanical Governor
209	699056		Spring-Governor
209A	691276		Spring-Governor
222	790143		Bracket-Control -(Remote/Manual Friction)(Primer)
222A	692021		Bracket-Control (Used With Choke Type Carburetor) -(Remote Choke & Choke-A-Matic)
222D	692467		Bracket-Control -(Fixed Speed)
222E	692982		Bracket-Control -(Fixed Speed And 5 Position Manual Choke)
227	690783		Lever-Governor Control
240	298090S		Filter-Fuel
265	690798		Clamp-Casing
265A	691024		CLAMP, Casing
267	691044		Screw (Oil Fill Bracket) -(Casing Clamp)
268	691025		Casing-Control Wire (72" Cut To Required Length) -(Cut To Required Length)
269	691026		Wire-Control (78" Long Cut To Required Length) -(Cut To Required Length)
270	691027		Nut (Control Wire Casing) -(Control Wire Casing)
271	691028		Lever-Control
404	690272		Washer -(Governor Crank)
410	690575		Link-Control
489	690664		Screw (Muffler Guard) -(Linkage Lever)
505	691251		Nut (Governor Control Lever) -(Governor Control Lever)
562	92613		Bolt (Governor Control Lever) -(Governor Control Lever)
601	791850		CLAMP, Hose
601A	691038		CLAMP, Hose
615	690340		Retainer-Governor Shaft
616	698801		Crank-Governor
621	692310		Switch-Stop
624	691419		Lever-Linkage
668	493823		Spacer (Includes 2) (Sold In Kit Only) -(Includes 2)
670	692294		Spacer-Fuel Tank
843	691884		Sleeve-Lever -(Speed Control)
843A	691895		Sleeve-Lever -(Choke)

Not For Reproduction

© Copyright 2017 Briggs and Stratton. All Rights reserved

Controls, Fuel Supply, Governor Spring

Mfg. No: 127702-0637-01

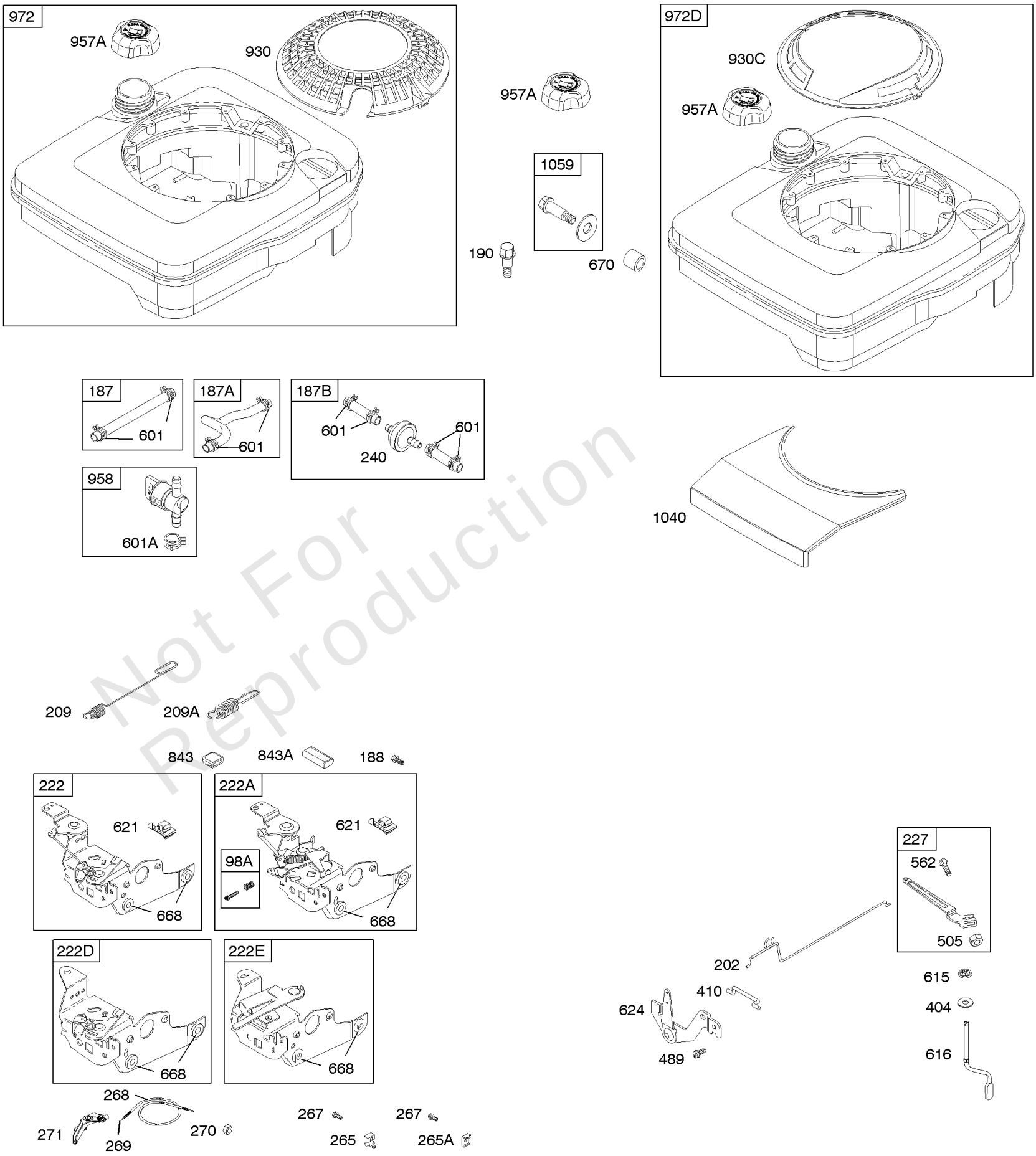

Not For Reproduction

Controls, Fuel Supply, Governor Spring

REF NO	PART NO	QTY	DESCRIPTION
930	691919		Guard-Rewind -(Round)
930C	690598		Guard-Rewind -(Trim Ring)
957A	692046		Cap-Fuel Tank -(Plastic)
958	698183		Valve-Fuel Shut Off(PLT) -(Plastic)
972	699392		Tank-Fuel -(Plastic)
972D	497343		Tank-Fuel (Black, 1 Quart) -(Plastic)
1040	281252		Plate-Trim
1059	692311		Kit-Screw/Washer

Not For Reproduction

© Copyright 2017 Briggs and Stratton. All Rights reserved

© Copyright 2017 Briggs and Stratton. All Rights reserved