Parts Manual

Mfg. No: 121702-0185-01

Copyright © Briggs and Stratton. All Rights reserved

23-May-2019

Model Components

	Page
Air Cleaner Groups	4
Brake, Electrical	6
Carburetor Group	10
Controls	12
Crankcase Cover/Sumps	14
Cylinder Group	16
Electric Starter	18
Flywheels, Blower Housing, Flywheel	20
Governor Spring	22
Kits/Gasket Sets	24
Muffler Groups	26
Oil Group, Fuel Parts	28
Piston Group	30
Replacement Engine	32
Rewind Group	33
Tank	35
Valves, Crankshaft	37

Not For Reproduction

Copyright © Briggs and Stratton. All Rights reserved

Mfg. No: 121702-0185-01

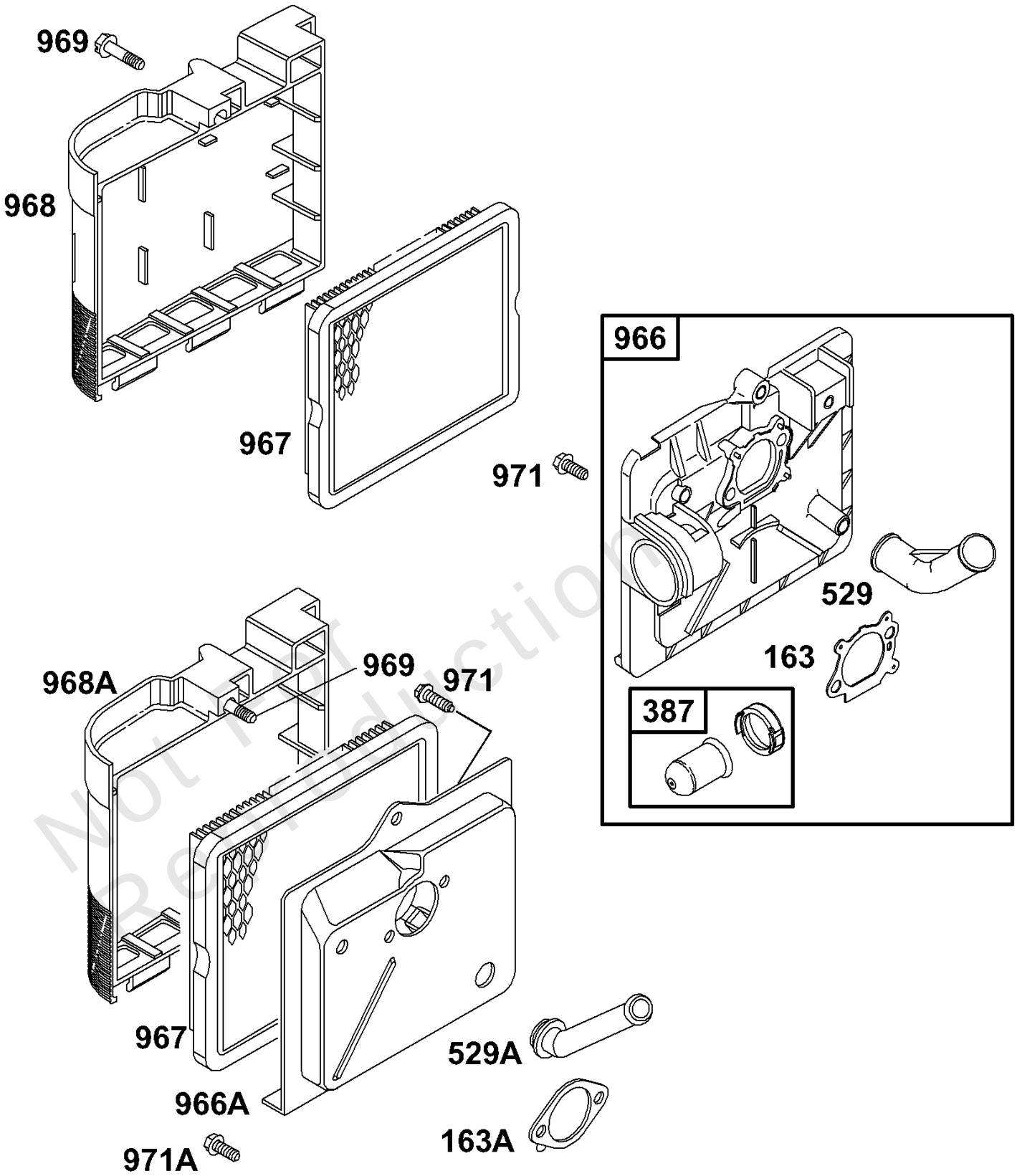

Not for reproduction

Copyright © Briggs and Stratton. All Rights reserved

Air Cleaner Groups

REF NO	PART NO	QTY	DESCRIPTION
163A	272296		GASKET, Air Cleaner -(Air Cleaner)
163	272653		GASKET, Air Cleaner
387	496115		PRIMER, Carburetor
529A	280943		GROMMET -(Breather)
529	281299		GROMMET
966A	492363		BASE, Air Cleaner Primer -(Metal)
966	496116		BASE, Air Cleaner -(Primer) -Used After Code Date 93080100
967	491588		FILTER, A/C Cartridge
968A	281069		COVER, Air Cleaner
968	281340		COVER, Air Cleaner
969	94120		SCREW -(Blower Housing)
971A	94269		SCREW -(Air Cleaner Base)
971	94121		SCREW -(Air Cleaner Base)

Not For Reproduction

Copyright © Briggs and Stratton. All Rights reserved

Brake, Electrical

Mfg. No: 121702-0185-01

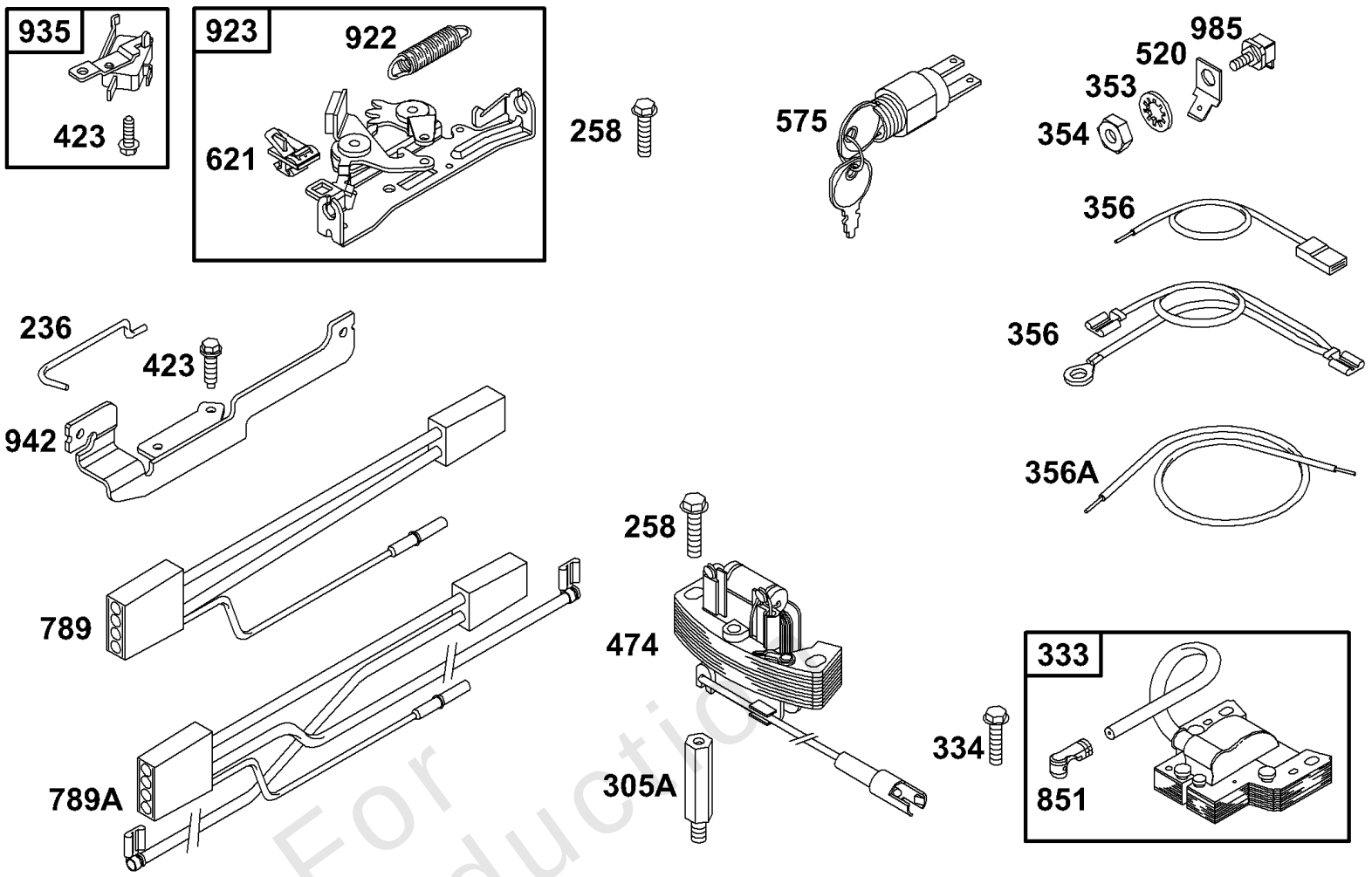

Not For Reproduction

Copyright © Briggs and Stratton. All Rights reserved

Brake, Electrical

REF NO	PART NO	QTY	DESCRIPTION
236	262461		LINK, Lockout
333	802574		ARMATURE, Magneto
334	94731		SCREW -(Magneto)
353	92791		WASHER -(Stop Switch)
354	90576		NUT -(Ground Terminal)
356	497833		WIRE, Stop
520	93722		TERMINAL, Ground
575	392832		SWITCH, Key
575	396291		SWITCH, Starting
621	396847		SWITCH, Stop
851	493880		TERMINAL, Spark Plug
922	262640		SPRING, Brake
923	493442		BRAKE
935	398758		SWITCH, Interlock -(12 Volt)
942	224494		BRACKET, Brake

Not For Reproduction

Copyright © Briggs and Stratton. All Rights reserved

Carburetor Group

Mfg. No: 121702-0185-01

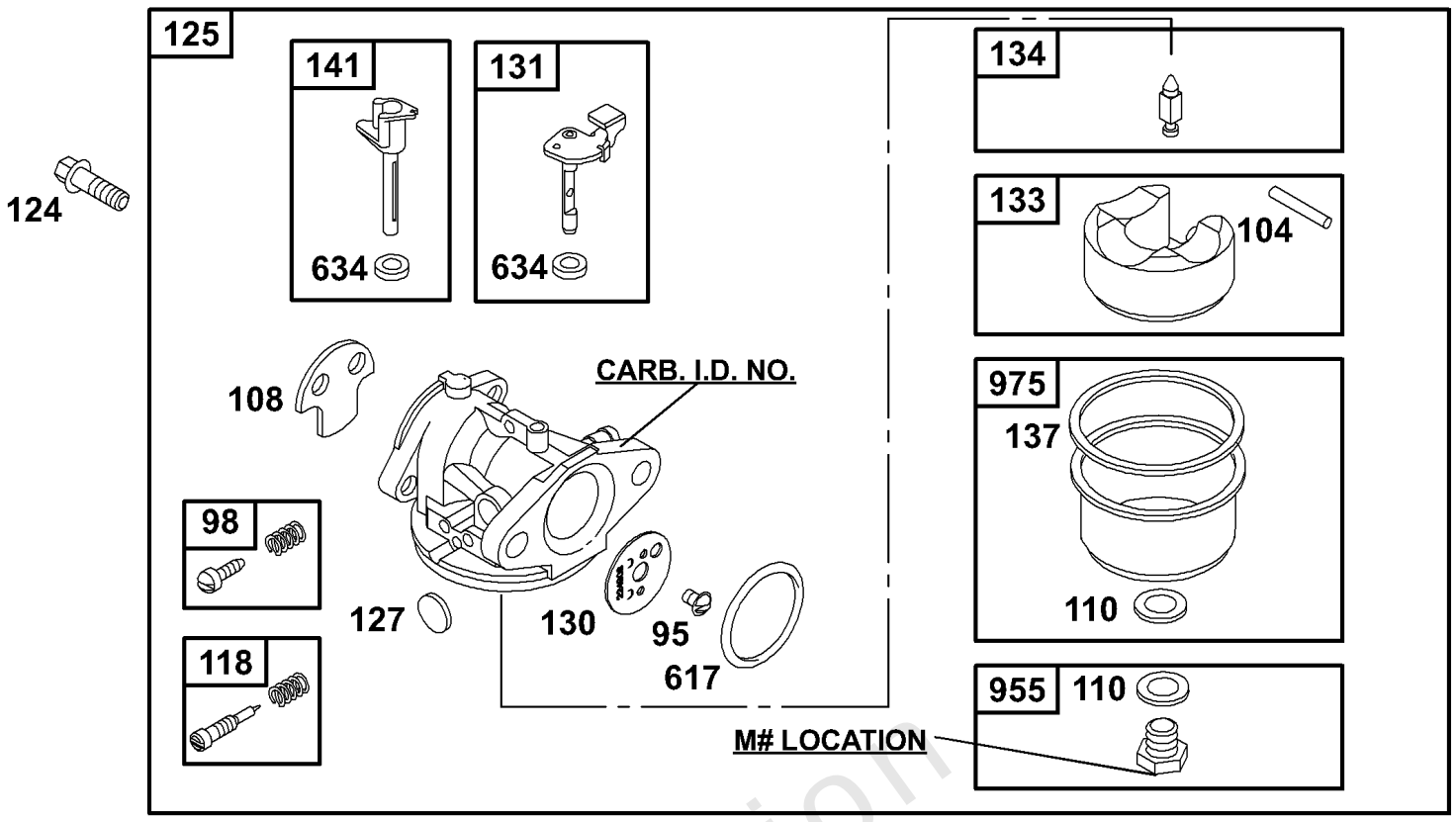

Not For Reproduction

Copyright © Briggs and Stratton. All Rights reserved

Carburetor Group

REF NO	PART NO	QTY	DESCRIPTION
95	94098		SCREW -(Throttle Valve)
98	398185		KIT, Idle Speed -(Idle Speed) (Lmt 26, 27, 28, 31)
104	231371		PIN, Float Hinge
108	223471		VALVE, Choke
110	-----		Washer (Choke Shaft) (Sold In Kit Only)
118	492945		KIT, Idle Mixture -(Lms 11,12,m26)
118	493765		KIT, Idle Mixture -(Carburetor ID No. M24) -Used After Code Date 90060300
125	493764		CARBURETOR
125	494216		CARBURETOR -(Choke) -Used After Code Date 90060300
127	-----		Plug-Welch (Sold In Kit Only)
130	223470		VALVE, Throttle
131	493267		KIT, Throttle Shaft
133	398187		FLOAT, Carburetor
134	398188		KIT, Needle/Seat
137	-----		Gasket-Float Bowl Bowl (Sold In Kit Only)
141	493266		KIT, Choke Shaft
141	494218		KIT, Choke Shaft -Used After Code Date 90060300
617	270344		SEAL, O-Ring -(Intake Manifold)
634	-----		Spring/Seal Assembly (Sold In Kit Only)
955	493637		JET, Main -(Standard)
955	494870		JET, Main -Used After Code Date 90060300
955	496063		JET, Main -(High Altitude)
975	493640		BOWL, Float

Not For Reproduction

Copyright © Briggs and Stratton. All Rights reserved

Carburetor Group

Mfg. No: 121702-0185-01

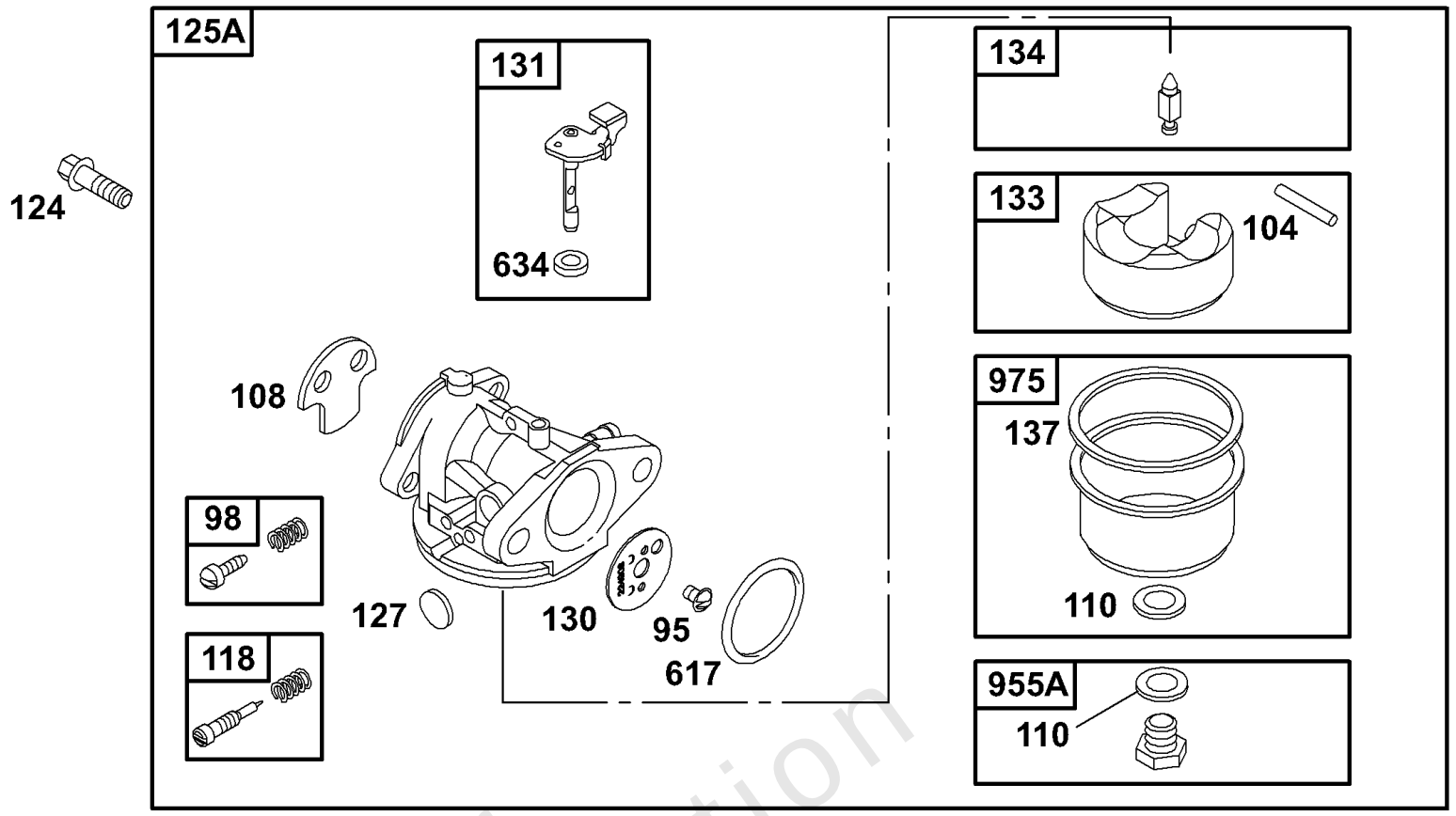

Not For Reproduction

Copyright © Briggs and Stratton. All Rights reserved

Carburetor Group

REF NO	PART NO	QTY	DESCRIPTION
95	94098		SCREW -(Throttle Valve)
98	398185		KIT, Idle Speed -(Idle Speed) (Lmt 26, 27, 28, 31)
104	231371		PIN, Float Hinge
108	223471		VALVE, Choke
110	-----		Washer (Choke Shaft) (Sold In Kit Only)
118	492945		KIT, Idle Mixture -(Lms 11,12,m26)
118	493765		KIT, Idle Mixture -(Carburetor ID No. M24) -Used After Code Date 90060300
127	-----		Plug-Welch (Sold In Kit Only)
130	223470		VALVE, Throttle
131	493267		KIT, Throttle Shaft
133	398187		FLOAT, Carburetor
134	398188		KIT, Needle/Seat
137	-----		Gasket-Float Bowl Bowl (Sold In Kit Only)
617	270344		SEAL, O-Ring -(Intake Manifold)
634	-----		Spring/Seal Assembly (Sold In Kit Only)
975	493640		BOWL, Float

Not For Reproduction

Copyright © Briggs and Stratton. All Rights reserved

Mfg. No: 121702-0185-01

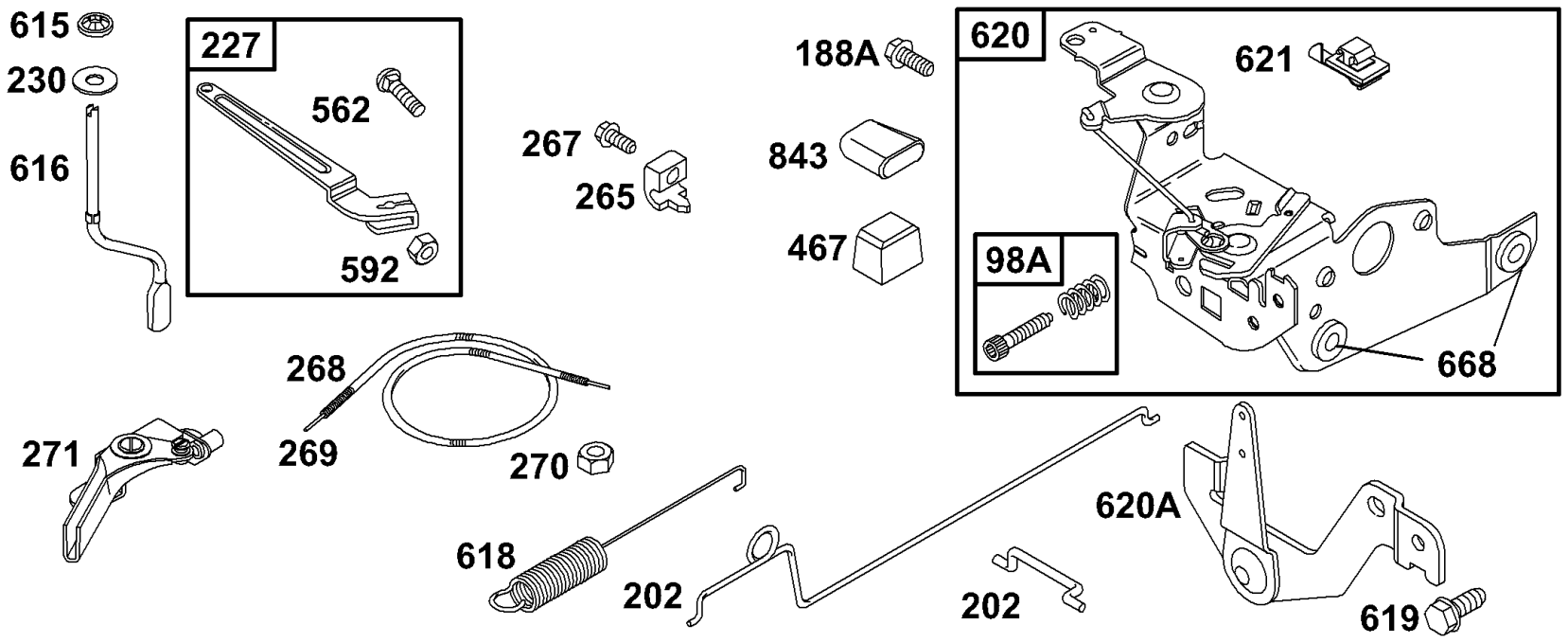

Not For Reproduction

Copyright © Briggs and Stratton. All Rights reserved

Controls

REF NO	PART NO	QTY	DESCRIPTION
98A	493280		SCREW -(Idle Speed)
188A	94644		SCREW -(Control Bracket)
202	262782		LINK, Mechanical Governor
227	492349		LEVER, Governor Control
230	67072		WASHER -(Stop Switch Bracket)
265	213146		CLAMP, Casing
267	94204		SCREW -(Casing Clamp)
268	65616		CASING, Control Wire -(Cut To Required Length)
268	66986		CASING, Control Wire -(Cut To Required Length)
269	26099		WIRE, Control -(Cut To Required Length)
269	26633		WIRE, Control -(Cut To Required Length)
270	63426		NUT -(Control Wire Casing)
271	290568		LEVER, Control
562	92613		BOLT -(Governor Lever)
592	231082		NUT -(Governor Control)
615	94474		RETAINER, Governor Shaft
616	262578		CRANK, Governor
620A	494112		BRACKET, Control -(Includes 2)
620	492978		BRACKET, Control -(Remote Control)
620	493894		BRACKET, Control -(Remote Control) -Used After Code Date 90030400
620	493895		BRACKET, Control -(Manual Friction)
620	495975		BRACKET, Control -(Choke) -Used After Code Date 93080100
620	495976		BRACKET, Control -(Manual Friction) -Used After Code Date 93080100
621	396847		SWITCH, Stop
668	493823		SPACER -(Includes 2)
843	272616		SLEEVE, Lever

Not For Reproduction

Copyright © Briggs and Stratton. All Rights reserved

Crankcase Cover/Sumps

Mfg. No: 121702-0185-01

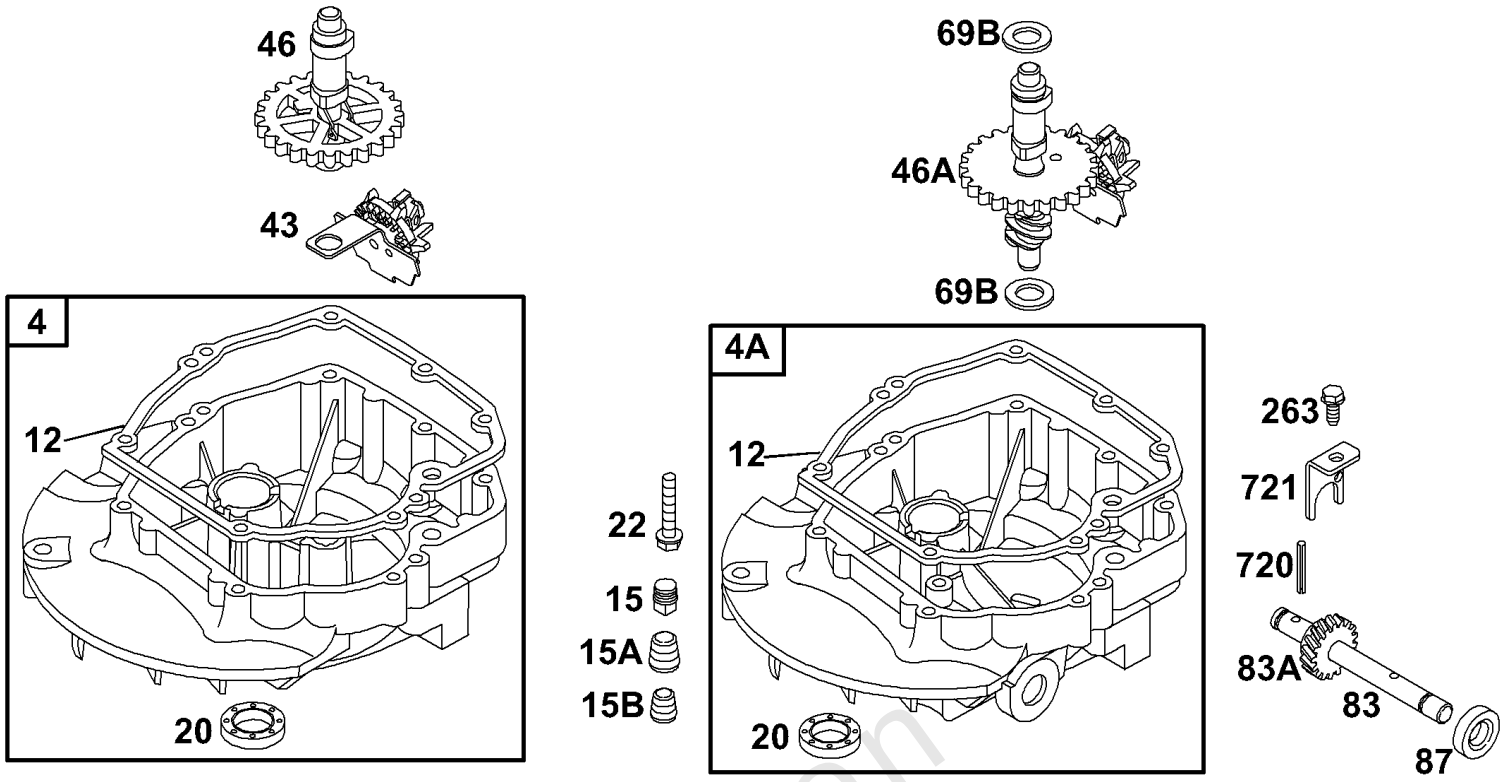

Not For Reproduction

Copyright © Briggs and Stratton. All Rights reserved

Crankcase Cover/Sumps

REF NO	PART NO	QTY	DESCRIPTION
4A	493365		SUMP, Engine -(Right Angle Drive)
4	493279		SUMP, Engine
12	272198		GASKET, Crankcase
15A	93613		SCREW -(Armature)
15B	94470		PLUG, Oil Drain -(1/16 27 NPT)
15	94239		PLUG, Oil Drain -(Square Head)
20	399781		SEAL, Oil -(PTO Side)
22	94220		SCREW
22	94612		SCREW -(Crankcase Cover) (Hole Nearest Breather)
43	493737		SLINGER, Governor/Oil
46A	493739		CAMSHAFT -(Clockwise) -Used After Code Date 90030400
46A	493741		CAMSHAFT -(Counterclockwise) -Used After Code Date 90030400
46A	492668		CAMSHAFT -(Clockwise) -Used After Code Date 90031900
46	492828		CAMSHAFT
69B	68938		WASHER -(Starter Clutch)
83A	231278		GEAR, Drive -(Clockwise)
83	231671		SHAFT, Auxiliary Drive
87	391484		SEAL, Oil -(1/2 Auxiliary Drive Shaft)
263	93572		SCREW -(10-32 X 3/8)
721	224249		STOP, Shaft

Not For Reproduction

Copyright © Briggs and Stratton. All Rights reserved

Cylinder Group

Mfg. No: 121702-0185-01

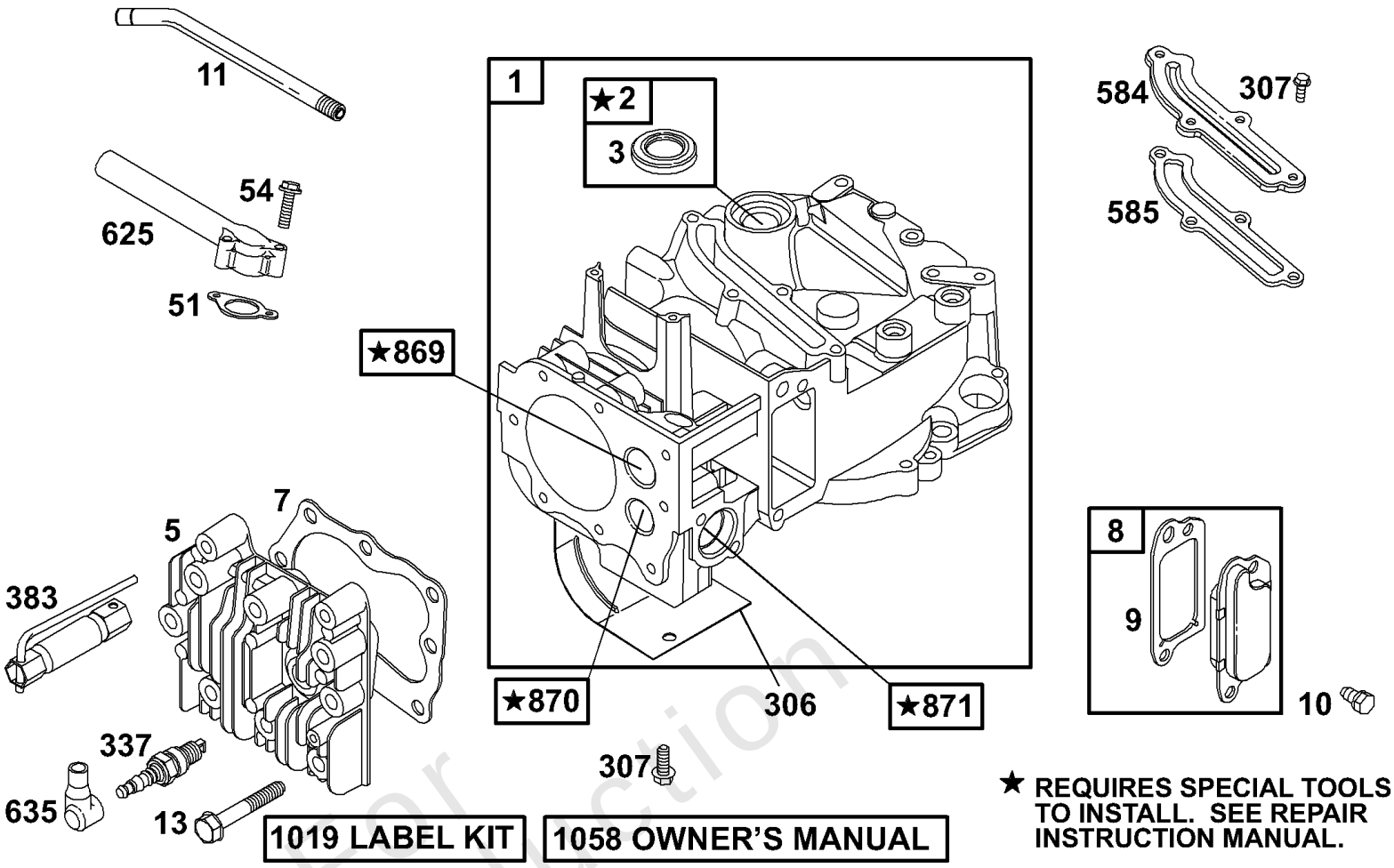

Not For Reproduction

Copyright © Briggs and Stratton. All Rights reserved

Cylinder Group

REF NO	PART NO	QTY	DESCRIPTION
1	493260		CYLINDER ASSEMBLY
2	293708		KIT, Bushing/Seal -(Plain Bearing)
3	299819		SEAL, Oil -(Plain Bearing)
3	393862		SEAL, Oil -(Magneto Side)
5	213861		HEAD, Cylinder
7	272200		GASKET, Cylinder Head
8	494489		BREATHER ASSEMBLY
9	272481		GASKET, Rocker Cover
10	94222		SCREW -(Breather Assembly)
11	231685		TUBE, Breather
13	94547		SCREW -(Cylinder Head)
51	272199		GASKET, Intake
54	94526		SCREW -(Intake Manifold)
306	224324		SHIELD, Cylinder
307	94515		SCREW -(Cylinder Shield)
337	293918		PLUG, Spark
337	298809		PLUG, Spark
337	492167		PLUG, Spark
337	802592		PLUG, Spark -(Resistor)
383	89838		WRENCH, Spark Plug
584	224328		BAFFLE, Breather
585	272238		GASKET, Breather Passage
625	492717		STACK, Air
635	66538		BOOT, Spark Plug
869	213512		SEAT, Valve -(Intake)
870	213513		SEAT, Valve -(Exhaust)
871	262001		BUSHING, Valve Guide -(Exhaust)
1019	494256		KIT, Label
1058	272262		MANUAL, Operator's
1058	273693		MANUAL, Operator's

Not For Reproduction

Copyright © Briggs and Stratton. All Rights reserved

Mfg. No: 121702-0185-01

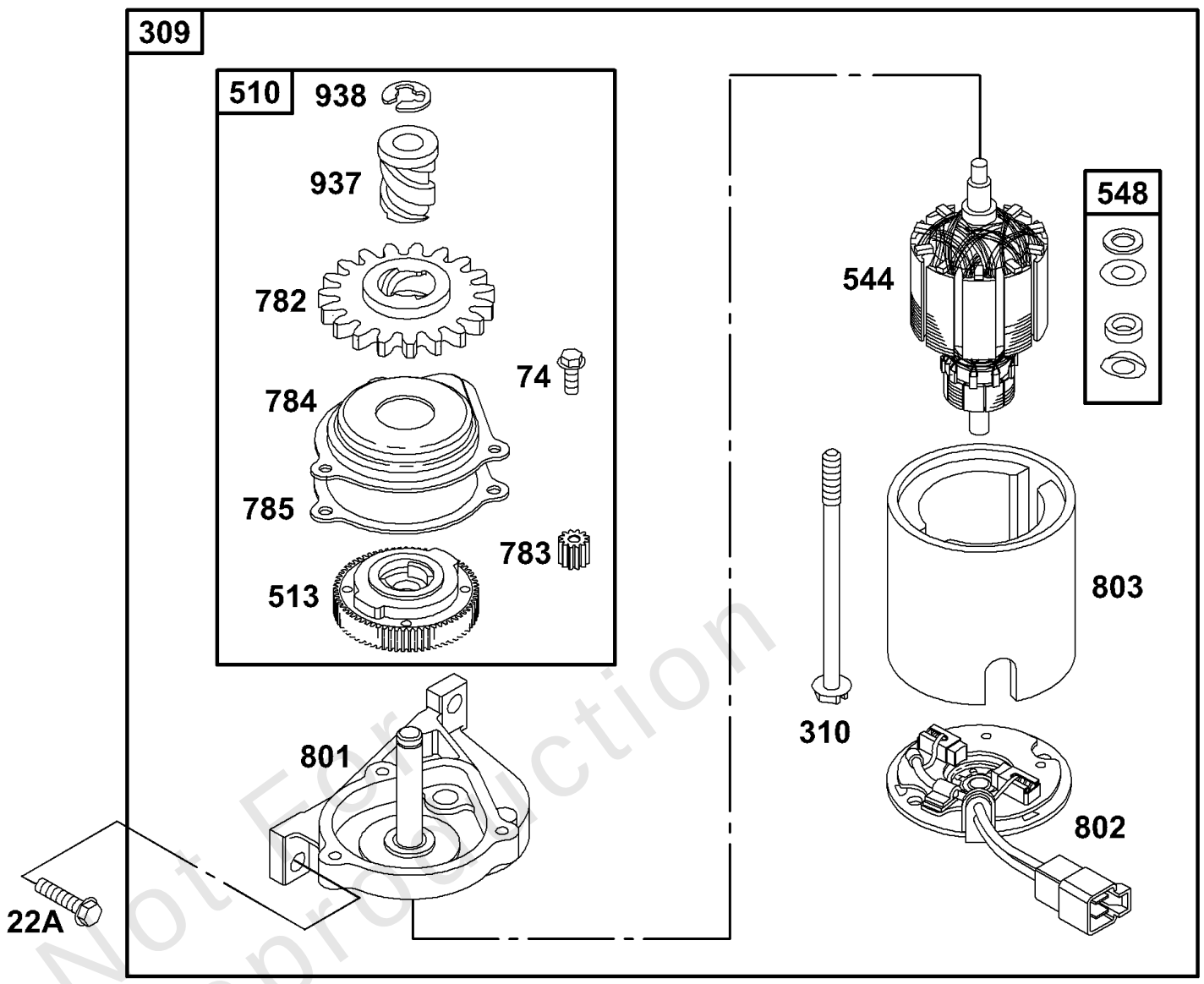

Not For Reproduction

Copyright © Briggs and Stratton. All Rights reserved

Electric Starter

REF NO	PART NO	QTY	DESCRIPTION
22A	94268		SCREW -(Crankcase Cover)
74	93490		SCREW -(Rotating Screen)
309	494233		MOTOR, Starter
310	94553		BOLT -(Starter Motor)
510	494147		DRIVE, Starter
513	394815		CLUTCH, Starter
544	492921		ARMATURE, Starter
548	492919		WASHER -(Starter Motor)
783	261606		GEAR, Starter Drive
784	224262		COVER, Starter Gear
785	272201		GASKET, Starter Cover
801	492335		CAP, Drive
802	492922		CAP, End
803	492920		HOUSING, Starter
937	281125		SPLINE, Starter -Used After Code Date 90063000
937	494146		SPLINE, Starter -(Includes Pinion)
938	93941		RETAINER, E Ring

Not For Reproduction

Copyright © Briggs and Stratton. All Rights reserved

Flywheels, Blower Housing, Flywheel

Mfg. No: 121702-0185-01

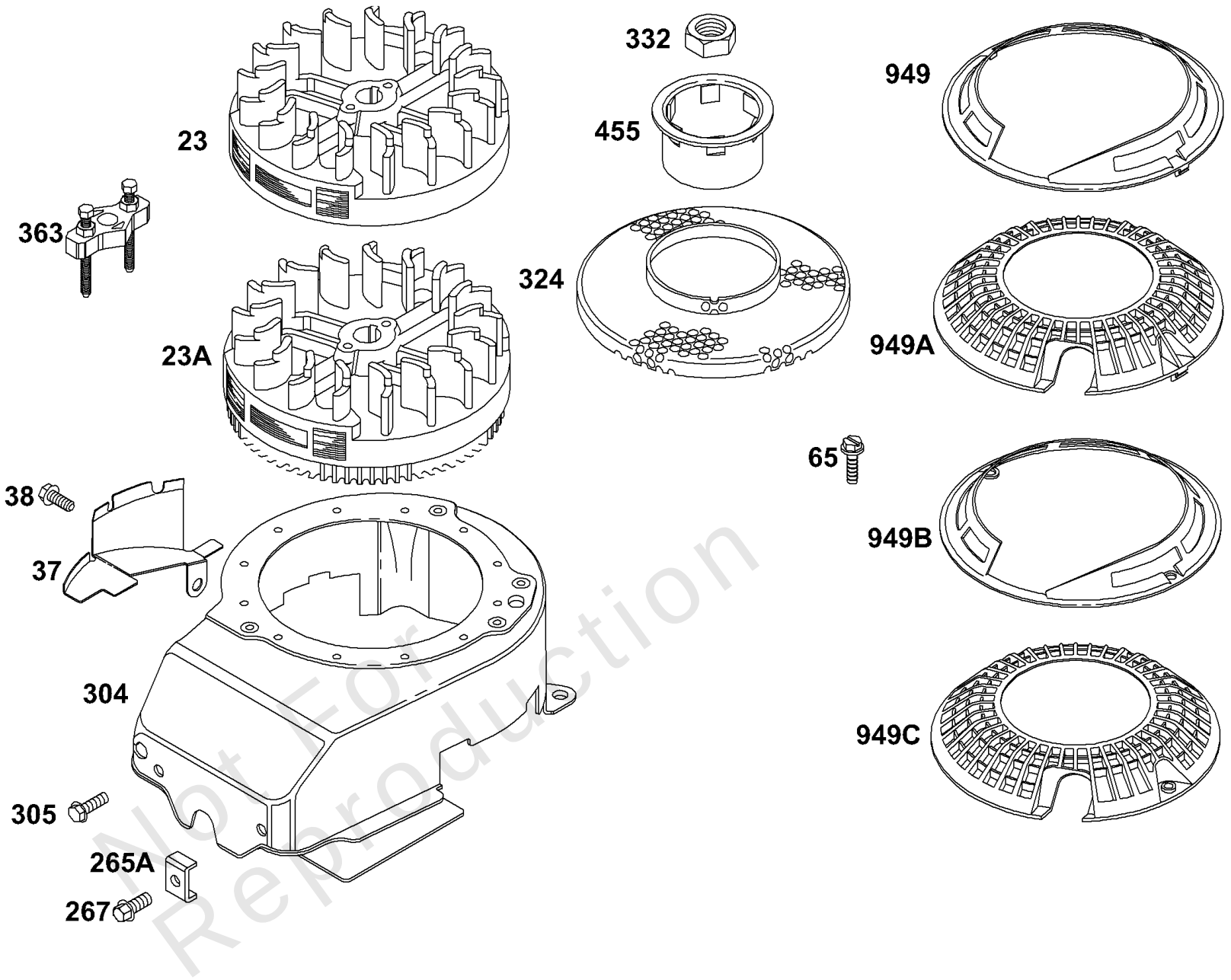

Not For Reproduction

Copyright © Briggs and Stratton. All Rights reserved

Flywheels, Blower Housing, Flywheel

REF NO	PART NO	QTY	DESCRIPTION
23A	492175		FLYWHEEL
23	492177		FLYWHEEL
37	224511		GUARD, Flywheel
38	94608		SCREW -(Fuel Shut Off)
65	94058		SCREW -(Rewind Starter)
265A	22372		CLAMP, Casing
267	94204		SCREW -(Casing Clamp)
304	493293		HOUSING, Blower -(Compliance Engines)
304	493294		HOUSING, Blower -(Non Compliance Engines)
305	94167		SCREW -(Blower Housing)
305	94513		SCREW -(Blower Housing)
324	224251		SCREEN, Rotating
332	92284		NUT -(Flywheel)
363	19069		PULLER, Flywheel
455	224250		CUP, Flywheel
949A	281136		GUARD, Rewind -(Snap In) (1 1/2 Quart Tank)
949C	280946		GUARD, Rewind -(Screw In) (1 1/2 Quart Tank)
949B	280980		GUARD, Rewind -(Screw In) (1 Quart Tank)
949A	281130		GUARD, Debris Screen
949C	281089		GUARD, Debris Screen
949	281187		GUARD, Rewind -(Snap In) (1 Quart Tank)
949	94639		GUARD, Debris Screen

Not For Reproduction

Copyright © Briggs and Stratton. All Rights reserved

Mfg. No: 121702-0185-01

209

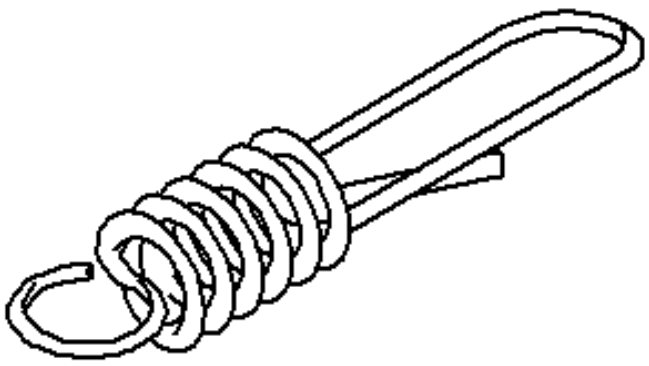

Not For Reproduction

Copyright © Briggs and Stratton. All Rights reserved

Governor Spring

REF NO	PART NO	QTY	DESCRIPTION
209	262656		SPRING, Governor

Not For Reproduction

Copyright © Briggs and Stratton. All Rights reserved

Mfg. No: 121702-0185-01

358 GASKET SET

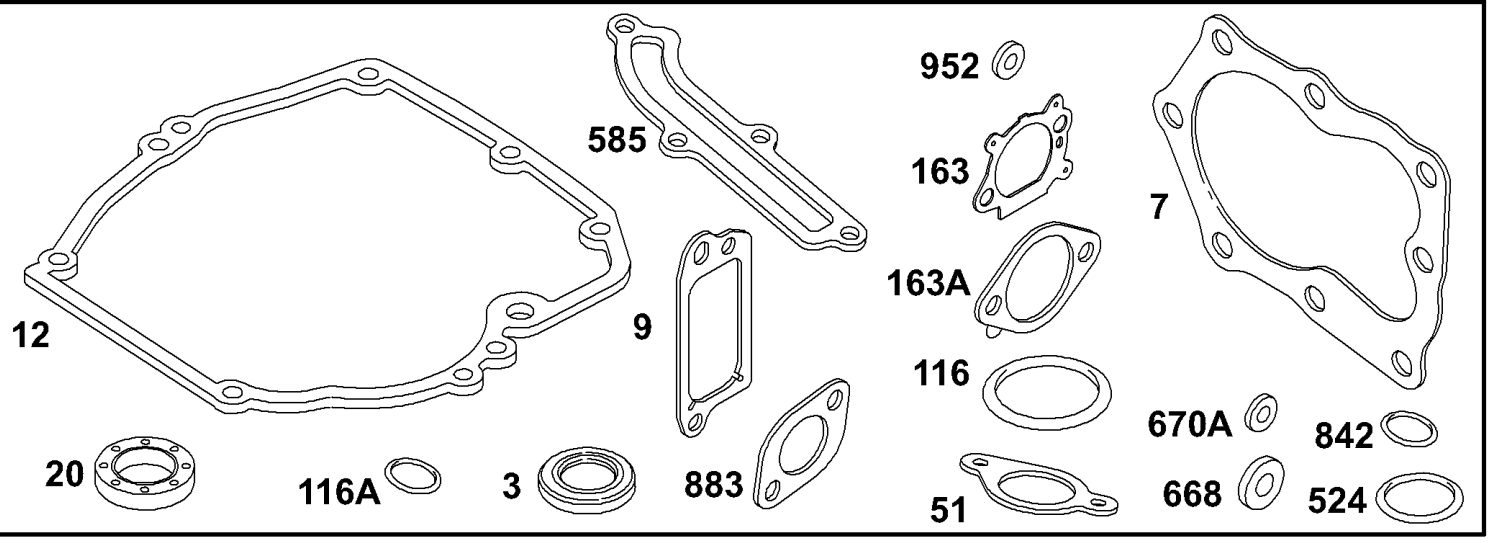

977 CARBURETOR GASKET SET

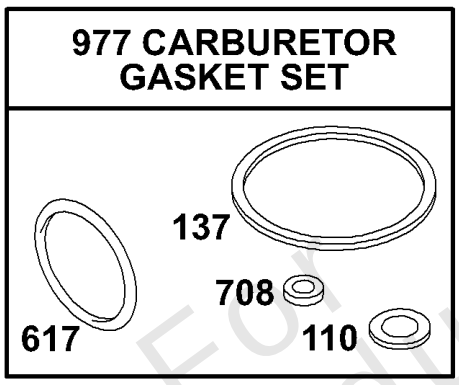

121 CARBURETOR KIT

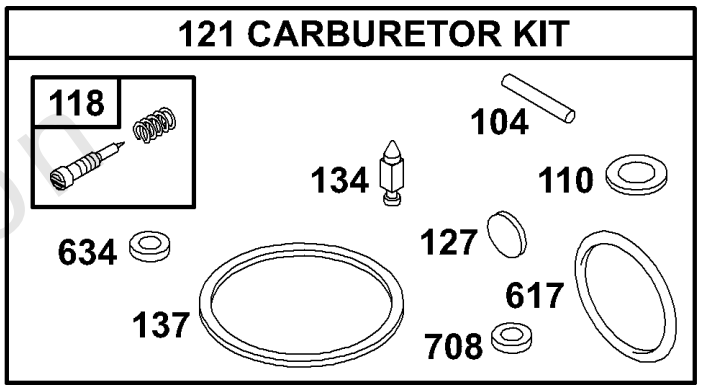

Not For Reproduction

Copyright © Briggs and Stratton. All Rights reserved

Kits/Gasket Sets

REF NO	PART NO	QTY	DESCRIPTION
3	299819		SEAL, Oil -(Plain Bearing)
3	393862		SEAL, Oil -(Magneto Side)
7	272200		GASKET, Cylinder Head
9	272481		GASKET, Rocker Cover
12	272198		GASKET, Crankcase
20	399781		SEAL, Oil -(PTO Side)
51	272199		GASKET, Intake
104	231371		PIN, Float Hinge
110	-----		Washer (Choke Shaft) (Sold In Kit Only)
116A	280966		SEAL, O-Ring -(Idle Mixture Kit)
116	-----		Seal-O Ring (Idle Mixture Kit) (Sold In Kit Only)
116	280393		SEAL, O-Ring -(Dipstick Tube)
118	492945		KIT, Idle Mixture -(Lms 11,12,m26)
118	493765		KIT, Idle Mixture -(Carburetor ID No. M24) -Used After Code Date 90060300
121	492495		KIT, Carburetor Overhaul -(Lms 11,12,13,14,15,m26)
121	493762		KIT, Carburetor Overhaul -Used After Code Date 90060300
127	-----		Plug-Welch (Sold In Kit Only)
134	398188		KIT, Needle/Seat
137	-----		Gasket-Float Bowl Bowl (Sold In Kit Only)
163A	272296		GASKET, Air Cleaner -(Air Cleaner)
163	272653		GASKET, Air Cleaner
358	493263		GASKET SET, Engine
358	496117		GASKET SET, Engine -Used After Code Date 93080100
524	280393		SEAL, O-Ring -(Dipstick Tube)
585	272238		GASKET, Breather Passage
617	270344		SEAL, O-Ring -(Intake Manifold)
634	-----		Spring/Seal Assembly (Sold In Kit Only)
668	493823		SPACER -(Includes 2)
670A	493823		SPACER -(Includes 2)
842	280966		SEAL, O-Ring -(Idle Mixture Kit)
883	K272253		GASKET, Exhaust
883	272253		GASKET, Exhaust
977	490937		SET, Carburetor Gasket -(Lms 11)

Not For Reproduction

Copyright © Briggs and Stratton. All Rights reserved

Mfg. No: 121702-0185-01

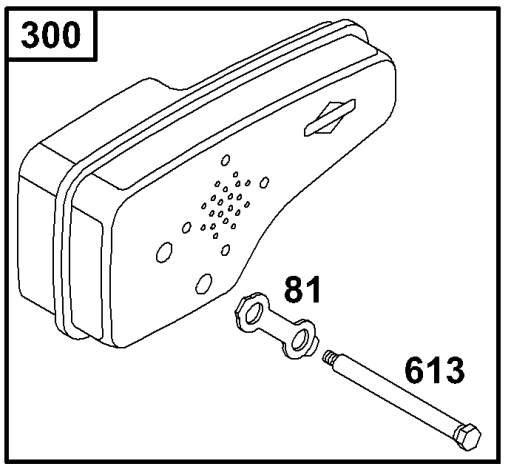

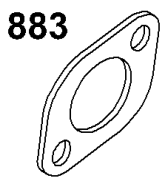

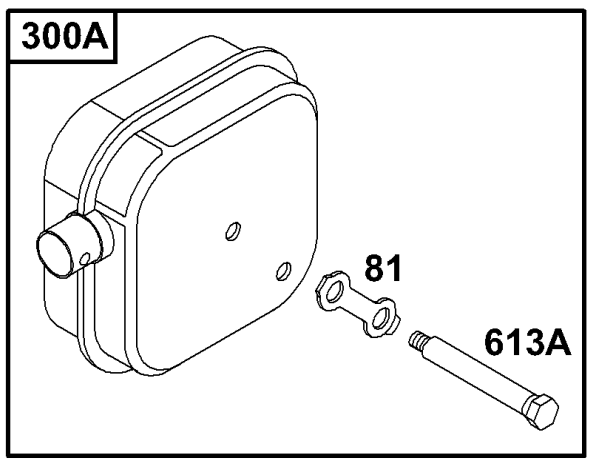

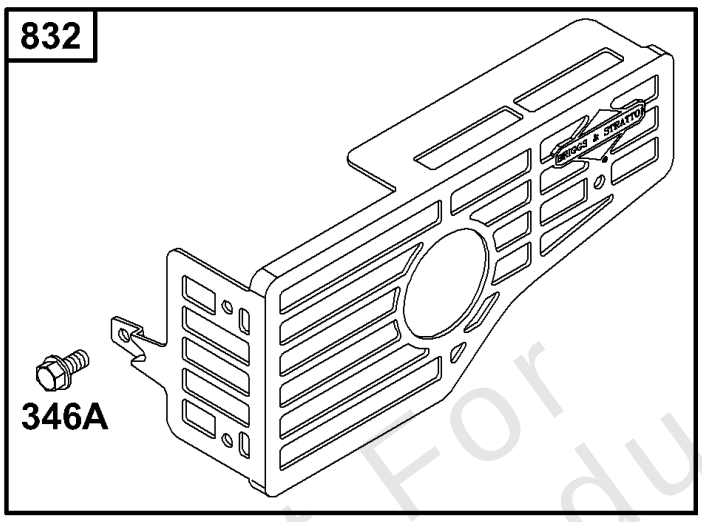

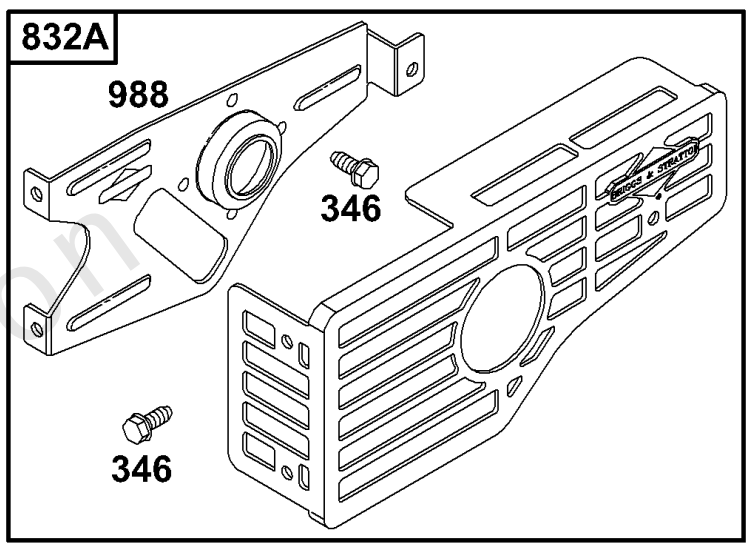

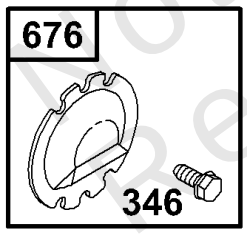

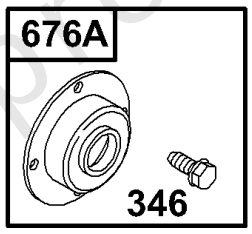

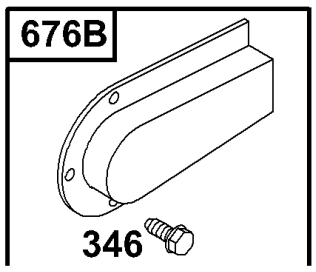

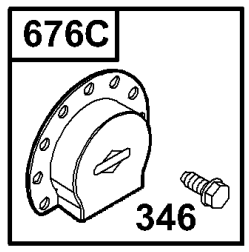

Do Not For Reproduction

Copyright © Briggs and Stratton. All Rights reserved

Muffler Groups

REF NO	PART NO	QTY	DESCRIPTION
81	223664		LOCK, Muffler Screw
300A	494343		MUFFLER -(Square Lo Tone)
300	490547		MUFFLER
346A	94602		SCREW -(Spark Arrestor)
346	93705		SCREW -(8-32 X 3/8)
613A	94615		SCREW -(Muffler)
613	94231		SCREW -(Muffler)
676A	397931		DEFLECTOR, Muffler
676B	493871		DEFLECTOR, Muffler
676C	393760		DEFLECTOR, Muffler
676	393756		DEFLECTOR, Muffler -(Side Outlet)
832	494224		GUARD, Muffler
883	K272253		GASKET, Exhaust
883	272253		GASKET, Exhaust
988	223828		BRACKET, Muffler Guard

Not For Reproduction

Copyright © Briggs and Stratton. All Rights reserved

Oil Group, Fuel Parts

Mfg. No: 121702-0185-01

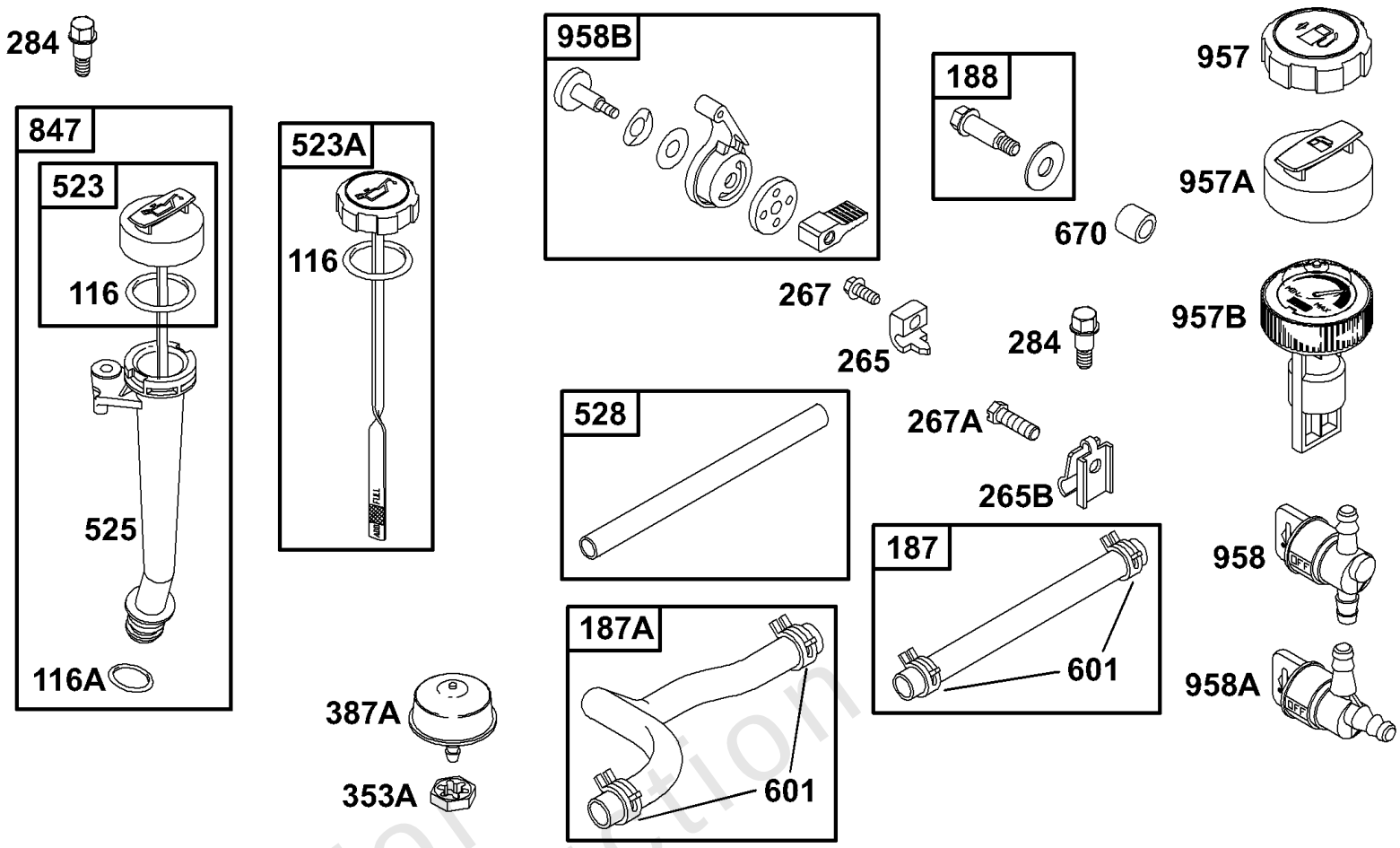

Not For Reproduction

Copyright © Briggs and Stratton. All Rights reserved

Oil Group, Fuel Parts

REF NO	PART NO	QTY	DESCRIPTION
116	-----		Seal-O Ring (Idle Mixture Kit) (Sold In Kit Only)
116A	280966		SEAL, O-Ring -(Idle Mixture Kit)
116	280393		SEAL, O-Ring -(Dipstick Tube)
187A	492791		LINE, Fuel
187	492790		LINE, Fuel -(6 3/4)
188	398540		SCREW -(Control Bracket)
265B	224057		CLAMP, Casing
265	213146		CLAMP, Casing
267A	94264		SCREW -(Casing Clamp)
267	94204		SCREW -(Casing Clamp)
284	94511		SCREW -(Control Wire Casing)
353A	94581		NUT -(Carburetor Primer)
387A	394281		PRIMER, Carburetor
523	493459		TUBE, Dipstick
523	493950		CAP, Oil Fill -Used After Code Date 89121300
523	495264		DIPSTICK -Used After Code Date 92072600
525	493459		TUBE, Dipstick
525	493952		TUBE, Dipstick -Used After Code Date 89121300
525	495265		TUBE, Dipstick -Used After Code Date 92072600
528	399254		LINE, Fuel -(1/4 O.D.)
601	93053		CLAMP, Hose -(Green)
601	93807		CLAMP, Hose -(Black)
670	280512		SPACER, Fuel Tank
847	493959		DIPSTICK/TUBE ASSEMBLY
847	495263		DIPSTICK/TUBE ASSEMBLY -Used After Code Date 92072600
957A	493017		CAP, Fuel Tank -(Plastic)
957B	494277		CAP, Fuel Tank -(Plastic)
957	397974		CAP, Fuel Tank -(Plastic)
958B	494235		VALVE, Fuel Shut Off -(Plastic)
958A	494539		VALVE, Fuel Shut Off -(Plastic)
958	493960		VALVE, Fuel Shut Off -(Plastic)

Not For Reproduction

Copyright © Briggs and Stratton. All Rights reserved

Mfg. No: 121702-0185-01

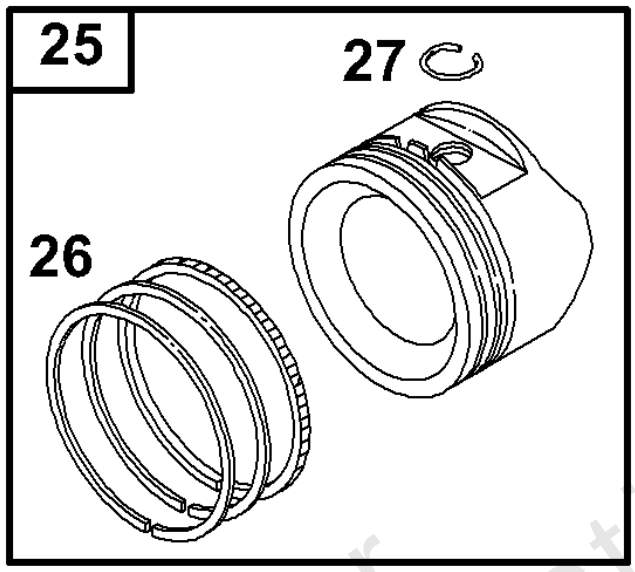

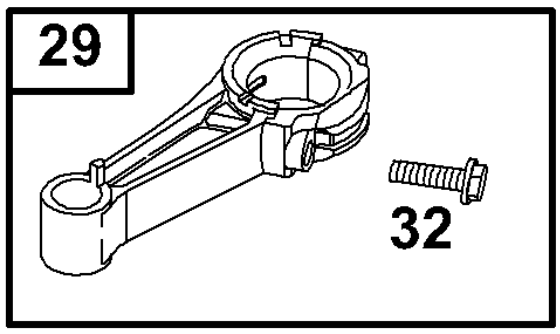

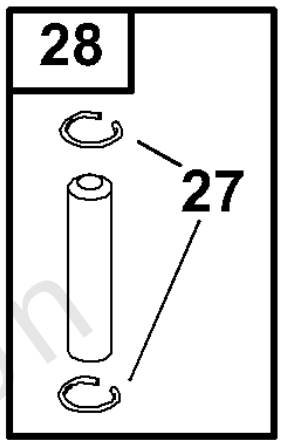

Not For Reproduction

Copyright © Briggs and Stratton. All Rights reserved

Piston Group

REF NO	PART NO	QTY	DESCRIPTION
25	493262		PISTON ASSEMBLY -(Standard)
25	493385		PISTON ASSEMBLY -(.010 Oversize)
25	493386		PISTON ASSEMBLY -(.020 Oversize)
25	493387		PISTON ASSEMBLY -(.030 Oversize)
26	493261		SET, Ring -(Standard)
26	493388		SET, Ring -(.010 Oversize)
26	493389		SET, Ring -(.020 Oversize)
26	493390		SET, Ring -(.030 Oversize)
27	26026		LOCK, Piston Pin
28	298908		PIN, Piston -(.005 Oversize)
28	298909		PIN, Piston -(Standard)
29	490566		ROD, Connecting -(Standard)
29	490743		ROD, Connecting -(.020 Undersize)
32	94405		SCREW -(Connecting Rod)

Not For Reproduction

Copyright © Briggs and Stratton. All Rights reserved

Replacement Engine

REF NO	PART NO	QTY	DESCRIPTION
	126L021015	1	Replacement Engine
	792738	1	Replacement Short Block
	-----		Top No-Load Speed: 3100 -Trim: ALL

Not For Reproduction

Copyright © Briggs and Stratton. All Rights reserved

Rewind Group

Mfg. No: 121702-0185-01

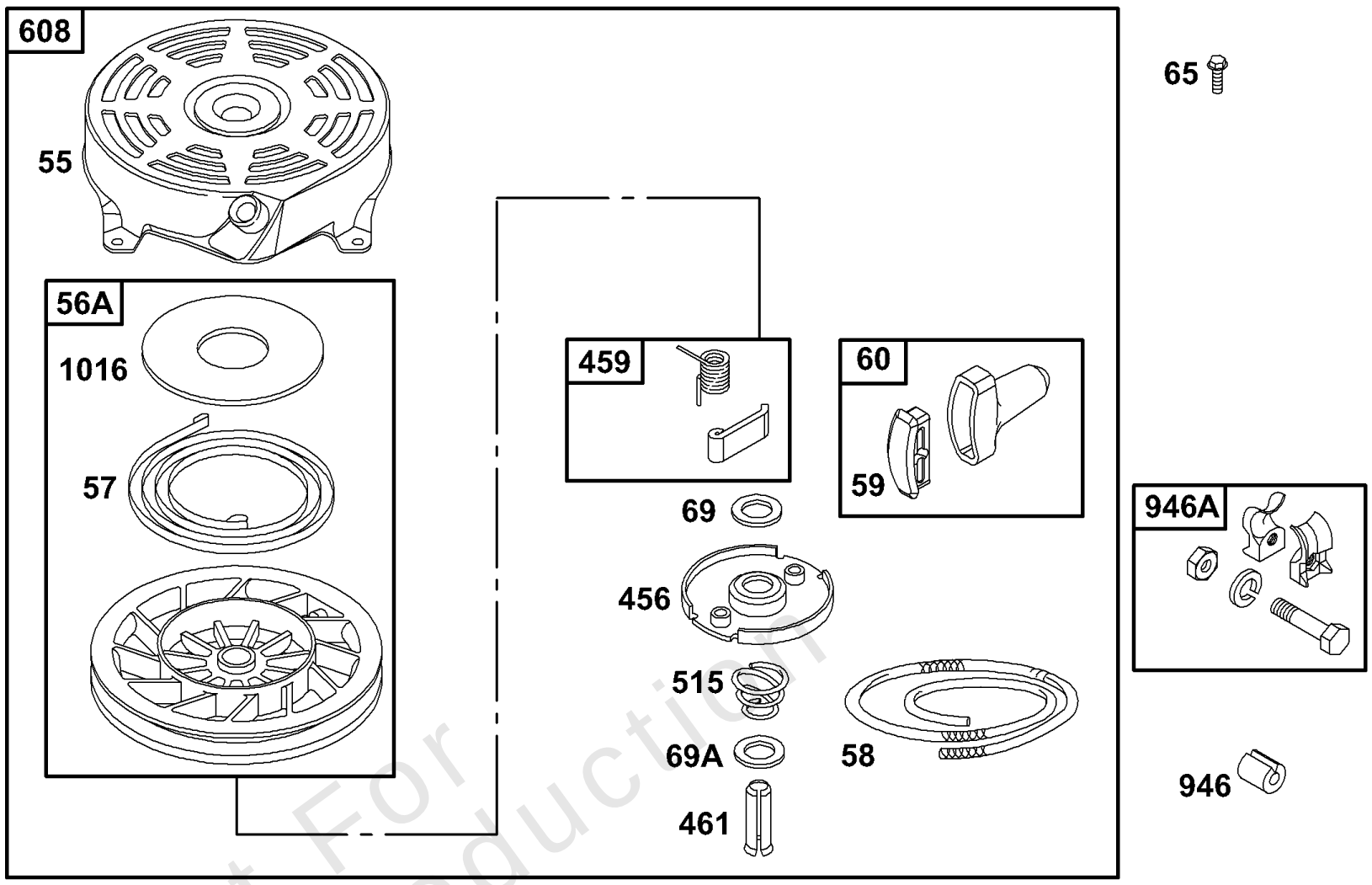

Not For Reproduction

Rewind Group

REF NO	PART NO	QTY	DESCRIPTION
65	94058		SCREW -(Rewind Starter)
69A	224322		WASHER -(Pawl Friction Plate)
69	280973		WASHER -(Starter Clutch)
456	224321		PLATE, Pawl Friction
459	492833		SPRING, Ratchet
515	262625		SPRING, Friction
608	493295		STARTER, Rewind
608	92987		STARTER, Rewind
608	94128		SCREW
946A	396526		GUIDE, Rope
946	223294		STOP, Rope

Not For Reproduction

Copyright © Briggs and Stratton. All Rights reserved

Mfg. No: 121702-0185-01

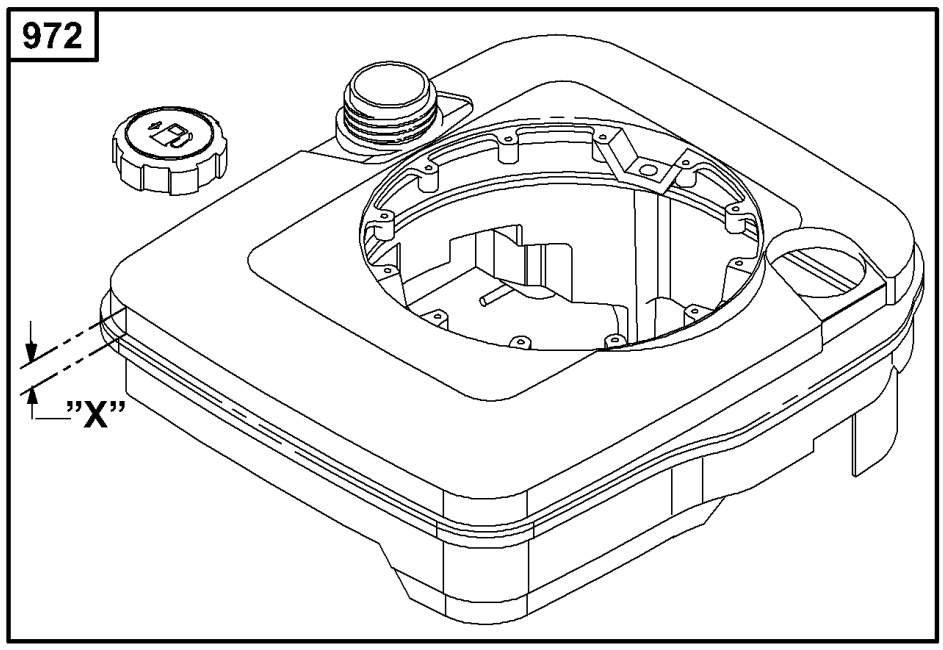

TANK SIZE	COLORS
1 Quart (X=5/16")	SEE REF. 972
1.5 Quart (X=11/16")	

Not For Reproduction

Copyright © Briggs and Stratton. All Rights reserved

Tank

REF NO	PART NO	QTY	DESCRIPTION
972	494351		TANK, Fuel -Used After Code Date 90092300
972	494528		TANK, Fuel -Used After Code Date 90092300
972	494534		TANK, Fuel -(1 Quart) (Black)

Not For Reproduction

Copyright © Briggs and Stratton. All Rights reserved

Mfg. No: 121702-0185-01

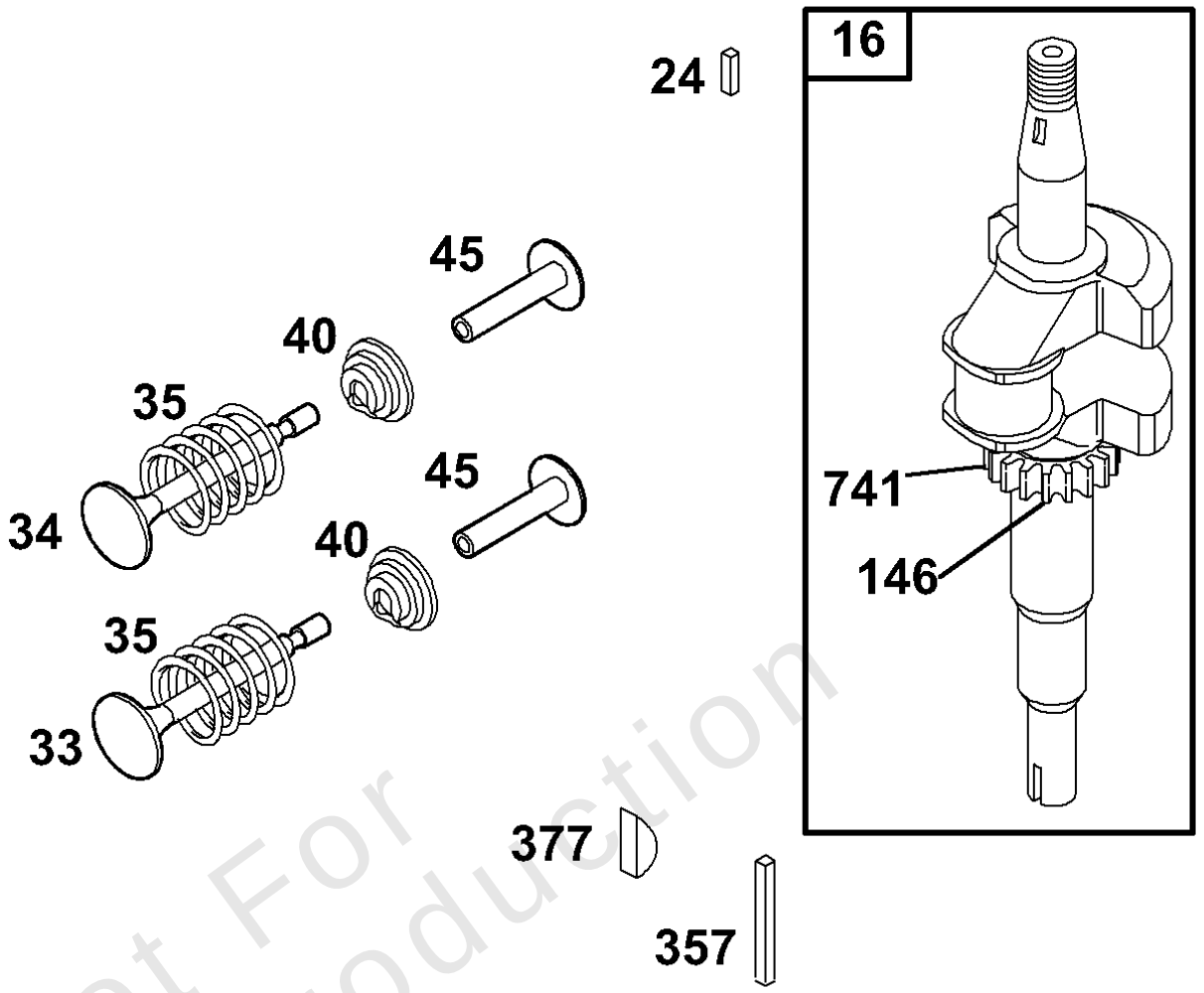

Not For Reproduction

Copyright © Briggs and Stratton. All Rights reserved

Valves, Crankshaft

REF NO	PART NO	QTY	DESCRIPTION
16	493362		CRANKSHAFT
24	222698		KEY, Flywheel
33	262651		VALVE, Exhaust
34	262652		VALVE, Intake
35	262224		SPRING, Valve -(Intake)
40	93312		RETAINER, Valve -(Valves With Groove In Stem)
45	262204		TAPPET, Valve
146	94388		KEY, Timing
357	91539		KEY, Drive Pulley -(3/16 Square)
377	93065		KEY, Woodruff -(#6)
377	94329		KEY, Drive Pulley
741	262598		GEAR, Timing

Not For Reproduction

Copyright © Briggs and Stratton. All Rights reserved

Copyright © Briggs and Stratton. All Rights reserved

23-May-2019